Reference Manual

G12
COMPLETE VEHICLE

Technical Training

The information contained in this manual is not to be resold, bartered, copied or transferred without the express written consent of BMW of North America, LLC ("BMW NA").

Copyright © 2019 BMW of North America, LLC

Reference Manual

www.bmwcenternet.com

The Ultimate Driving Machine®

BMW
Technical Training

G12 Complete Vehicle

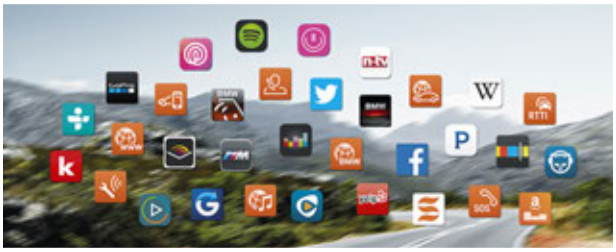

BMW of North America, LLC
Technical Training
ST1501
8/1/15

Information Status: **August 1, 2015**

Course Code: **ST1501** **G12 Complete Vehicle**

The information contained in the training course materials is solely intended for participants in this training course conducted by BMW Group Technical Training Centers, or BMW Group Contract Training Facilities.

This training manual or any attached publication is not intended to be a complete and all inclusive source for repair and maintenance data. It is only part of a training information system designed to assure that uniform procedures and information are presented to all participants.

For changes/additions to the technical data, repair procedures, please refer to the current information issued by BMW of North America, LLC, Technical Service Department.

This information is available by accessing TIS at www.bmwcenternet.com.

© 2015 BMW of North America, LLC. The BMW name and logo are registered trademarks. All rights reserved.

Technical training.
Product information.

G12 Introduction

Edited for the U.S. market by:
BMW Group University
Technical Training
ST1501 9/1/2015

BMW Service

General information

Symbols used

The following symbol is used in this document to facilitate better comprehension or to draw attention to very important information:

⚠

Contains important safety information and information that needs to be observed strictly in order to guarantee the smooth operation of the system.

Information status and national-market versions

BMW Group vehicles meet the requirements of the highest safety and quality standards. Changes in requirements for environmental protection, customer benefits and design render necessary continuous development of systems and components. Consequently, there may be discrepancies between the contents of this document and the vehicles available in the training course.

This document basically relates to the European version of left-hand drive vehicles. Some operating elements or components are arranged differently in right-hand drive vehicles than shown in the graphics in this document. Further differences may arise as the result of the equipment specification in specific markets or countries.

Additional sources of information

Further information on the individual topics can be found in the following:

- Owner's Handbook
- Integrated Service Technical Application.

Contact: conceptinfo@bmw.de

©2015 BMW AG, Munich

Reprints of this publication or its parts require the written approval of BMW AG, Munich.

The information contained in this document forms an integral part of the technical training of the BMW Group and is intended for the trainer and participants in the seminar. Refer to the latest relevant information systems of the BMW Group for any changes/additions to the technical data.

Information status: **June 2015**
BV-72/Technical Training

G12 Introduction

Contents

1. Introduction **1**
- 1.1. History 1
- 1.2. Models 4
- 1.3. Dimensions and weights 5
- 1.4. Silhouette comparison 6
- 1.5. Design and equipment 7
  - 1.5.1. Exterior 9
  - 1.5.2. Interior 10

2. Bodyshell **11**
- 2.1. Intelligent lightweight construction 11
- 2.2. Body structure 13
  - 2.2.1. Steel 13
  - 2.2.2. Aluminium 14
  - 2.2.3. Carbon 16

3. Body Repair Level 1 ..... **19**
- 3.1. Outer body skin materials 19
- 3.2. Front side panel 20
- 3.3. Doors 21
  - 3.3.1. Front door 21
  - 3.3.2. Rear door 24
  - 3.3.3. Lightweight support 25
- 3.4. Front end 27
  - 3.4.1. Design 27
  - 3.4.2. "Small Overlap" crash test 29
- 3.5. Trunk 29
- 3.6. Light carpet 31
- 3.7. Panorama glass roof 33
  - 3.7.1. Design 33
  - 3.7.2. Panorama roof roller blinds 34
  - 3.7.3. Drive 35
  - 3.7.4. Functions 36
  - 3.7.5. Notes for Service 36
- 3.8. Aerodynamics measures 38
  - 3.8.1. Air flaps 38
  - 3.8.2. Underbody panelling 38

4. Interior Equipment **39**
- 4.1. Front overview 39
- 4.2. Ambient lighting 41

G12 Introduction
Contents

4.2.1. Panorama roof lighting 42
4.3. Door trim panels 43
4.3.1. Speaker lighting 43
4.3.2. Light saber 43
4.4. Seats 44
4.4.1. Front seats 44
4.4.2. Rear seats 49
4.4.3. Massage functions 50
4.5. Rear console 53
4.6. Roller sunblinds 54
4.6.1. Roller sunblind for rear window 54
4.6.2. Roller sunblind for side window 55

5. Luggage Compartment 56

G12 Introduction

1. Introduction

The 6th generation of the BMW 7 Series code named G12 is now being launched on the market. The new BMW 7 Series is also a technology pioneer. In other words, it features a host of new technologies and further developed design elements.

The closed radiator grille and the precise contours of the hood lend the front of the new BMW 7 Series a sporty character at first glance. The elegant lines of the side view are emphasized by the distinctive double crease and the highlighted Hofmeister kink. The chrome trim strips at the rear and the L shape of the rear lights round off the striking and confident appearance of the new BMW 7 Series.

The luxurious interior of the new BMW 7 Series is characterized by the quality craftsmanship at a supreme level, precise surfaces and a completely new feeling of spaciousness. This is complemented by technical highlights such as Ambient light and BMW Touch Command. But it is the seating comfort in particular that sets new standards in this vehicle class.

A particular technical highlight of the body is the body structure with carbon reinforcements. This is based on technology transfer from development of the BMW i vehicles. Use of carbon with its specific material properties increases torsional rigidity and strength. The weight is reduced at the same time.

1.1. History

E23

E23

The E23 is the first BMW 7 Series and was produced from 1977 to 1986.

The passenger cell has a dynamic appearance due to the pronounced slope of the A-pillar and smooth roofline transition to the rear. This lends the E23 a sporty yet elegant look.

In the interior, the instrument panel is turned towards the driver, making the operating elements easier to reach. This ergonomically optimum driver orientation has become a design feature that is typical for BMW.

The E23 was initially produced in the works in Munich and Dingolfing. As from December 1982, the E23 rolled off the assembly line only in Dingolfing, like all subsequent BMW 7 series models.

G12 Introduction

1. Introduction

E32

E32

The E32 was produced from 1986 to 1994.

The harmonious contours and flowing transitions at the front, side and rear provide the E32 with a particularly elegant look. The horizontally wider radiator grill reinforces the presence of the front end. The L-shaped rear lights form the basis of an important BMW design element.

The E32 was also the first BMW 7 Series to be offered as a long version – with a 11.4 cm / 4.5 inch longer body.

E38

E38

The E38 was produced from 1994 to 2001.

Thanks to its elegant lines, the 3rd generation of the BMW 7 Series has a more elegant and elongated appearance than its predecessor.

Particular attention is paid to the rear seat passengers through a host of equipment and design details.

In addition to the "normal" long version (wheelbase extended by 14 cm / 5.5 inches), the E38 was also produced in a version with a 39 cm / 15.3 inch-longer wheelbase as the “L7”.

G12 Introduction

1. Introduction

E65/E66

E65

The E65 was produced from 2001 to 2008 (LCI: 2005 to 2008).

BMW opened up a completely new design era with the E65. The front end preserves the typical BMW radiator grille and twin circular headlights. The front headlights extend elegantly into the side contours. The side contour exudes calm and elegance thanks to the single continuous line extending from the front through to the complete rear end. The roofline has a Coupé-like form.

The greatest revolution in the vehicle interior is the iDrive operating system. This system made it possible to dispense with a large number of buttons, making the driving area appear much tidier and clearer.

The E66 is the long version of the E65 and was therefore given its own development code for the first time.

F01/F02

F01

The F01/F02 was produced from 2008 to 2015 (LCI: from 2012).

The 5th generation of the BMW 7 Series creates an even stronger presence through its large air inlets and long hood. At the sides, the balanced proportions are elegantly extended by longitudinal lines and surfaces. The width of the rear area is emphasized to convey the vehicle's sporting character.

G12 Introduction

1. Introduction

A special feature in the vehicle interior is the so-called “Black Panel“ in the instrument panel. The displays and indicator lights in the instrument cluster are now located behind a matt-black panel and are no longer visible when switched off.

1.2. Models

G12

G12

The new BMW 7 Series has the development code G12 (long version). The market introduction will start in October 2015.

The following models will be available for the market introduction:

G12	Drive	Displacement in cm^3	Power in kW (HP)	Torque in Nm (lb-ft)
740i	6-cylinder gasoline engine	2998	240 (320) from 5500 rpm	450 (330) from 1380 rpm
750Li[2]	8-cylinder gasoline engine	4395	330 (445) from 5500 rpm	650 (480) from 1500 rpm

[2]Also available as xDrive

The mounting points for lifting the G12 are much further apart in the longitudinal direction of the vehicle than on the F02. For this reason, particular attention must be paid to ensuring that the vehicle hoist in question is suitable for lifting the G12.

- F02 distance of mounting points in longitudinal direction: 1690 mm / 66.5 inches.
- G12 distance of mounting points in longitudinal direction: 2073 mm / 81.6 inches.

G12 Introduction

1. Introduction

1.3. Dimensions and weights

Below you can see the outer dimensions of the G12 in the BMW 740i:

The G11 is not available in the US market.

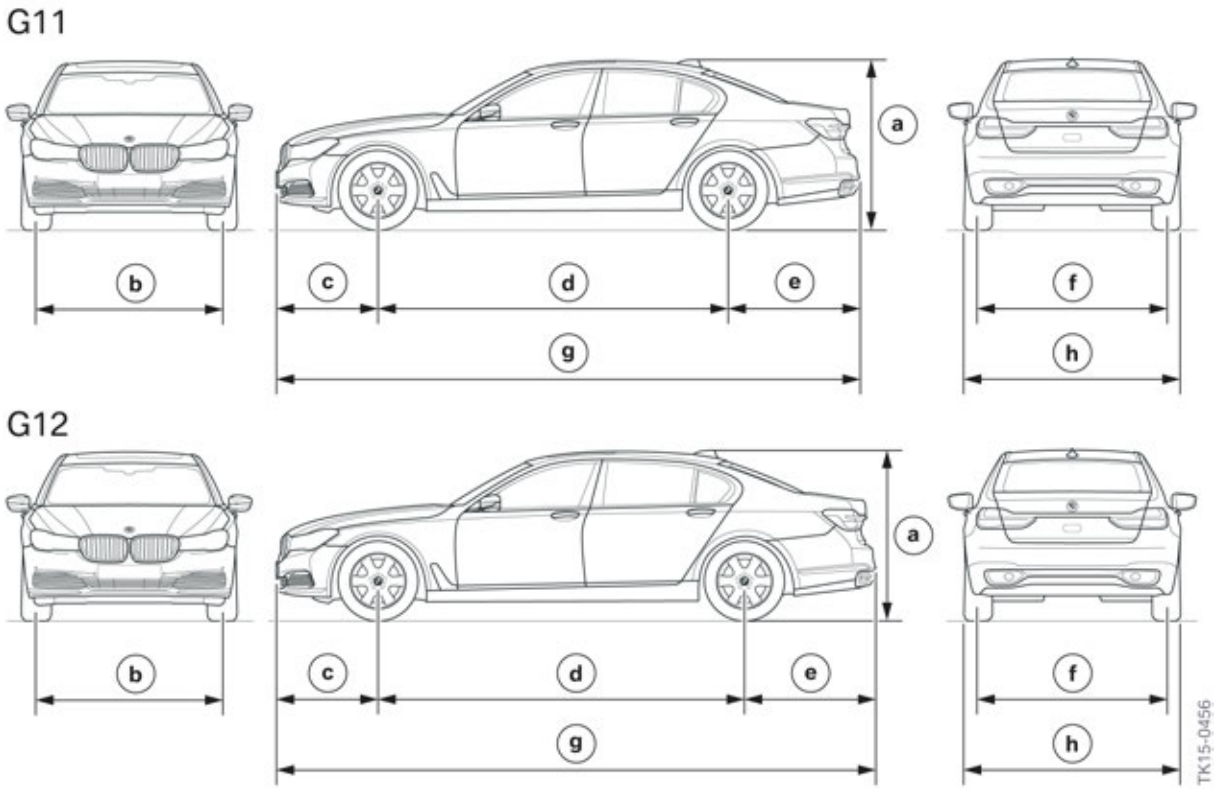

G11 Not For US/G12 outer dimensions

Index	Explanation		G12
a	Vehicle height, empty	[mm]	1479
b	Front track width, basic wheels	[mm]	1612
c	Front overhang	[mm]	890
d	Wheelbase	[mm]	3210
e	Rear overhang	[mm]	1148
f	Rear track width, basic wheels	[mm]	1650
g	Vehicle length	[mm]	5248
h	Vehicle width without exterior mirrors (vehicle width with exterior mirrors)	[mm]	1902 (2169)

G12 Introduction

1. Introduction

Below you can see the US vehicle curb weights and the payloads of the G12 using the example of the BMW 740i and 750i xDrive:

Model		Curb weight Rear-wheel drive	Curb weight xDrive	Payload capacity Rear-wheel drive	Payload capacity xDrive
740i	[kg/lbs]	1916/4225	N/A	438/960	N/A
750i	[kg/lbs]	N/A	2091/4610	438/960	438/960

1.4. Silhouette comparison

The G12 to F02.

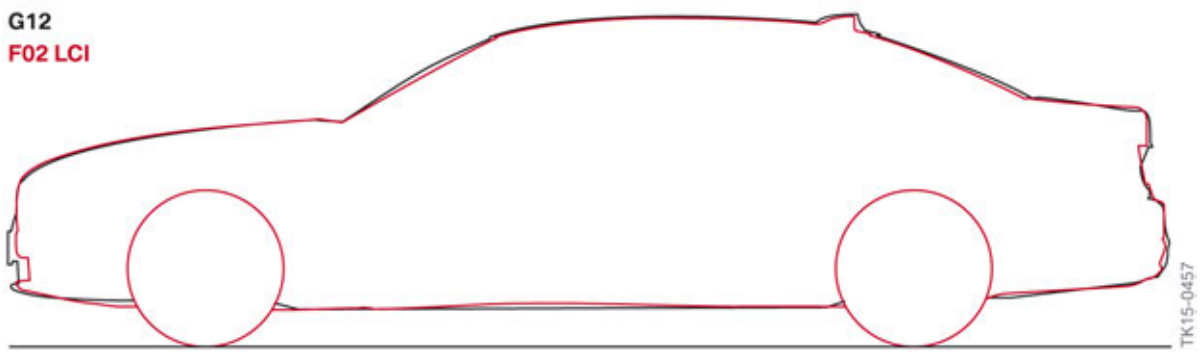

G12 dimensions

		G12	F02 LCI
Vehicle height, empty	[mm]	1479	1481
Front overhang	[mm]	880	866
Wheelbase	[mm]	3210	3210
Rear overhang	[mm]	1148	1143
Vehicle length	[mm]	5238	5219

G12 Introduction

1. Introduction

1.5. Design and equipment

G12 exterior highlights

Index	Explanation
1	Air vents on radiator grille
2	Chrome trim strip on Air Breather
3	Continuous trim strip on window cavity/door frame
4	Continuous rear trim strip
5	Integrated exhaust tailpipes
6	Light carpet

G12 Introduction

1. Introduction

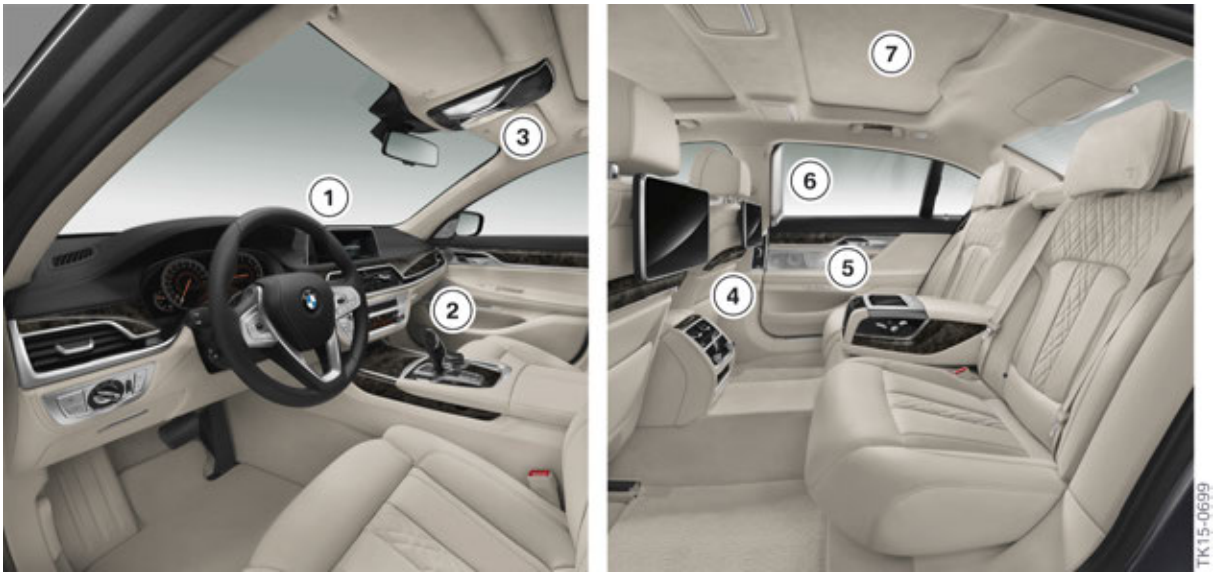

G12 Interior highlights

Index	Explanation
1	Central Information Display with touch operation
2	Interior fragrance
3	Camera for gesture control detection
4	Captain's chair
5	BMW Touch Command
6	Light saber
7	Panorama roof lighting “Sky Lounge”

G12 Introduction

1. Introduction

1.5.1. Exterior

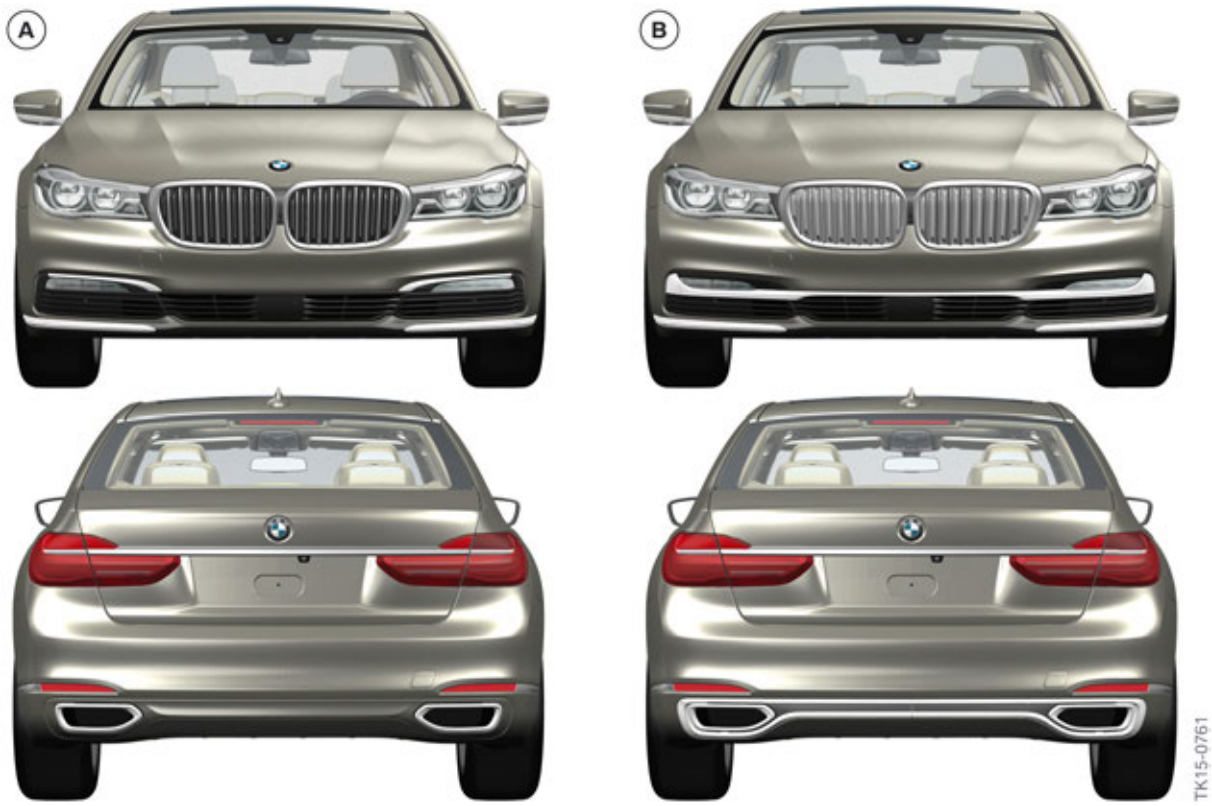

G12 Exterior trim

Index	Explanation
A	Exterior trim on basic version
B	Exterior trim optional equipment

The basic version of the G12 already features a large number of chrome strips. The ornamental grille and the air flaps are finished in high-gloss Black and have chrome trims on the front surfaces. A chrome strip is fitted in each case above and below the bottom air inlets on the right and left.

Like on the F01/F02, the G12 also features tailpipes integrated in the body. These have a model-dependent design and are surrounded by a chrome frame. There is a further chrome strip in each case next to the reflectors in the rear bumper. The continuous chrome strip on the trunk is continued in the rear lights.

1.5.2. Interior

The basic version of the interior equipment already has a high level of quality. The leather used in the interior is Dakota leather, which is available in different colors.

The following components are covered with leather in the basic version:

- Seat surfaces
- Upholstery insert on headrests
- Front and rear center armrests
- Armrests on the door trim panels

G12 Nappa exclusive leather

In the equipment specification Nappa leather with extended contents, additional seat and door trim panel components are covered with leather.

In this equipment specification, the leather features elaborate diamond stitching in the area of the center seat surfaces and backrests as well as on the backrest upper section. The leather of the seat surfaces and backrests is perforated in combination with the equipment “active seat ventilation”. The equipment “Exclusive leather Nappa with extended content” is available only in combination with comfort seats.

G12 Introduction

2. Bodyshell

2.1. Intelligent lightweight construction

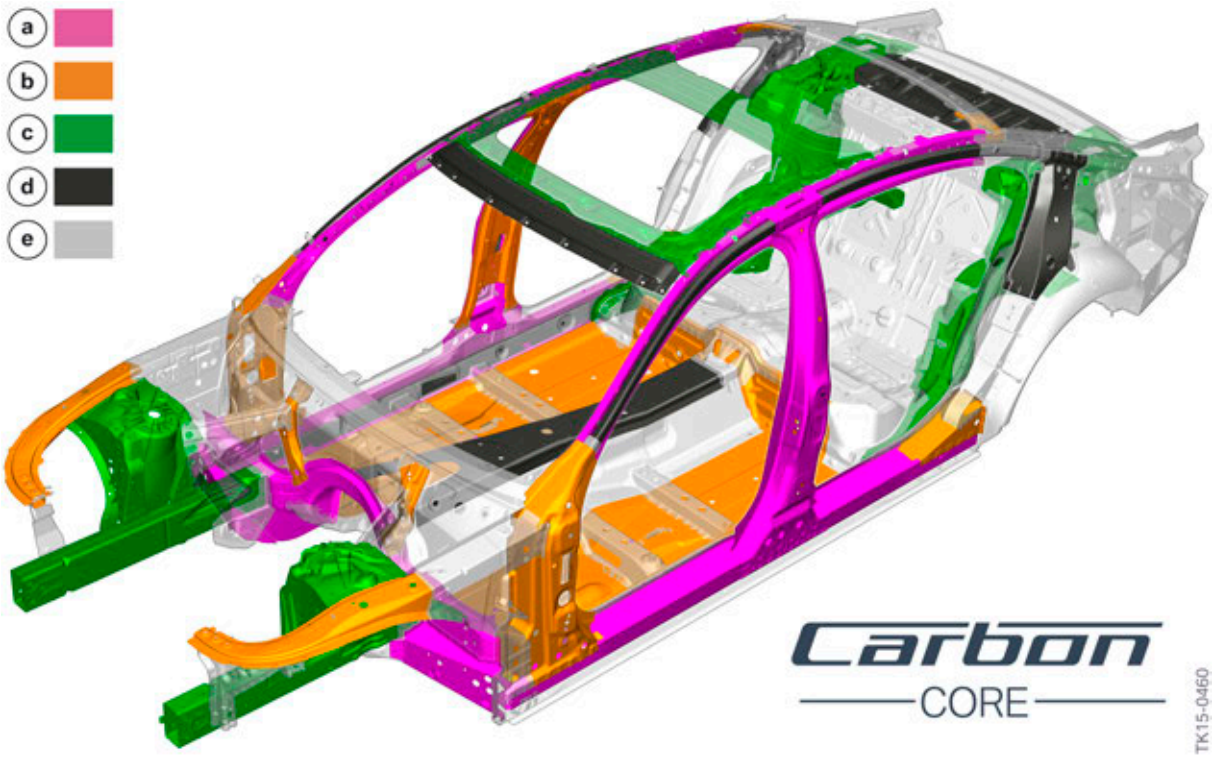

G12 material concept for body structure

Index	Explanation
a	Ultra-high-strength hot-formed steels
b	Multiphase steels
c	Aluminium
d	Carbon
e	Other steels

The bodyshell of the G12 was designed completely as a lightweight construction. The focus here is on the body structure as a so-called carbon core. In addition to the components made of steel and aluminium, this also features numerous reinforcements made of carbon. The different materials are used so that their specific characteristics optimally complement each other. As a result, it is above all the material mix that ensures a low weight in combination with high crash safety.

Thanks to the intelligent material mix, it was possible to reduce the weight of the body structure by approximately 40 kg / 88 lbs compared with the F02.

G12 Introduction
2. Bodyshell

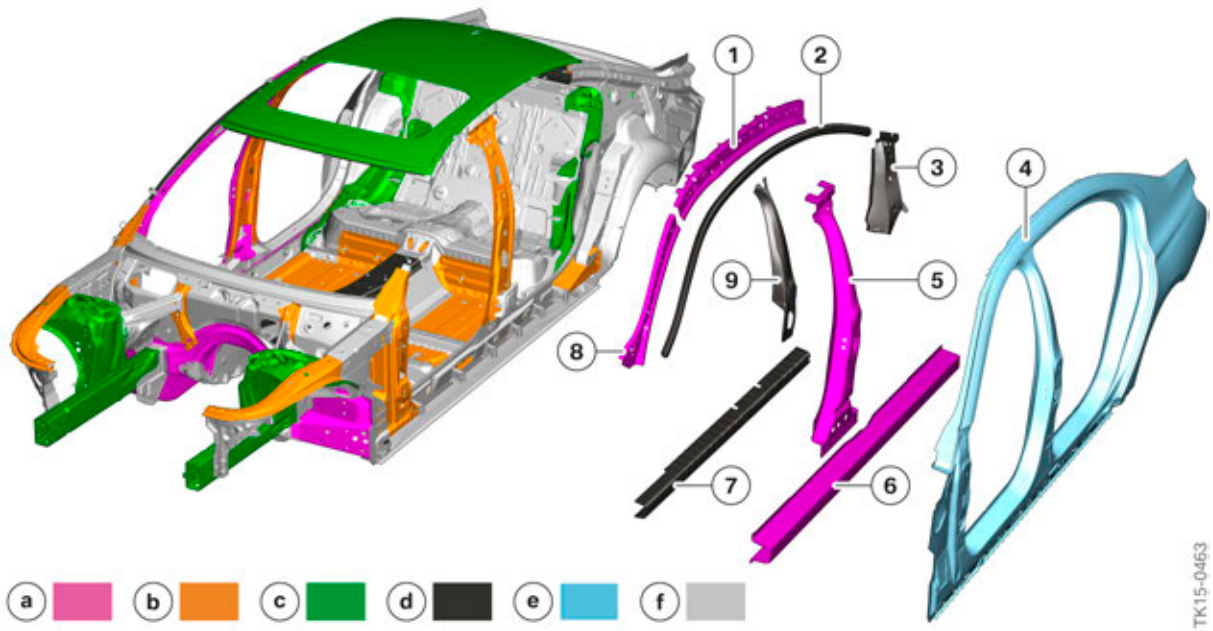

G12 Side frame structure

Index	Explanation
a	Ultra-high-strength steel (> 900 N/mm²)
b	Multiphase steel (> 300 N/mm²)
c	Aluminium
d	Carbon
e	Deep-drawing steel (< 300 N/mm²)
f	Other steel grades
1	Inner roof frame
2	Roof frame reinforcement
3	C-pillar reinforcement
4	Outer side frame (deep-drawing steel)
5	Reinforcement plate, B-pillar
6	Side sill reinforcement plate
7	Side sill reinforcement
8	Inner side frame
9	B-pillar reinforcement

The body structure of the G12 is made of steel, aluminium and carbon components. Through the consistent use of high-strength and ultra-high-strength steels and high-strength aluminium alloys, it was possible to increase the overall minimum proof stress of all metal materials in the bodyshell compared with the predecessor. An additional weight reduction was achieved by the use of carbon.

G12 Introduction
2. Bodyshell

The side frame of the G12 comprises a three-piece frame:

- **Outer side frame**
  The outer side frame is made of deep-drawing steel.
- **Middle side frame**
  The middle side frame is made of a material mix comprising ultra-high-strength heat-formed steel and carbon. This combination means that the middle side frame is optimized both in terms of weight and rigidity.
- **Inner side frame**
  The inner side frame is made of high-strength and ultra-high-strength steel grades.

2.2. Body structure

The information in this chapter shows the body structure of the G12.

2.2.1. Steel

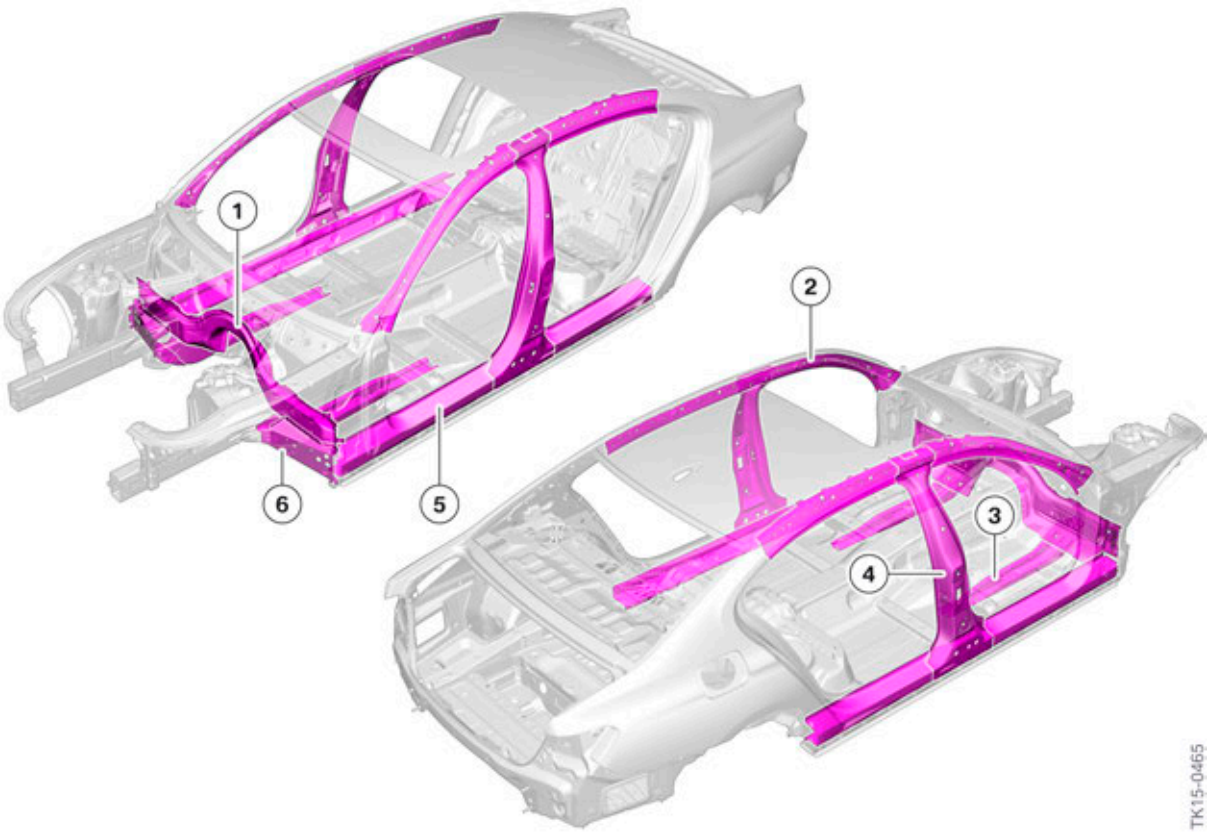

G12 Ultra-high-strength steels in the body structure

G12 Introduction
2. Bodyshell

Index	Explanation
1	Carrier support, bulkhead
2	Inner side frame
3	Engine support extension
4	Reinforcement plate, B-pillar
5	Side sill reinforcement plate
6	Outer connecting plate

The body structure consists largely of high-strength and ultra-high-strength steel grades. The share of ultra-high-strength heat-formed steel grades is particularly high.

An example of this is the B-pillar reinforcement plate. This is made from a tailored rolled blank. This made it possible to achieve an additional reduction in weight.

Further information on the steel grades used for body construction can be found in the information bulletin **“Fundamentals of Steel”**.

2.2.2. Aluminium

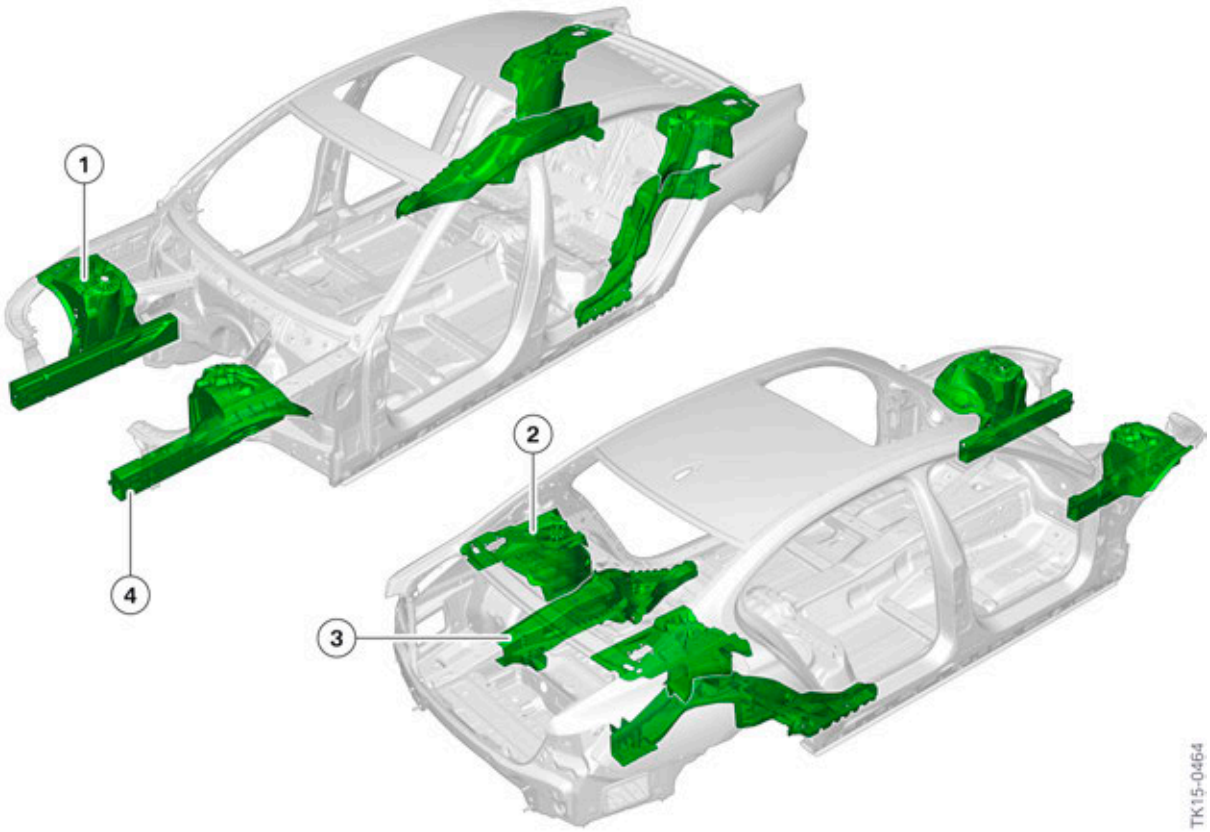

G12 Aluminium in the body structure

G12 Introduction
2. Bodyshell

Index	Explanation
1	Front spring strut dome
2	Rear spring strut dome
3	Side member
4	Engine support

The use of aluminium extruded profiles and complex die-cast aluminium parts permits realization of high body rigidity in combination with low weight. All requirements relating to passive safety are also met.

The spring strut domes at the front and, also for the first time, at the rear are manufactured using the aluminium pressure die casting process. New aluminium cast alloys were developed in order to increase the crash safety of these components. These alloys are characterized above all by improved crash performance.

Screw connections

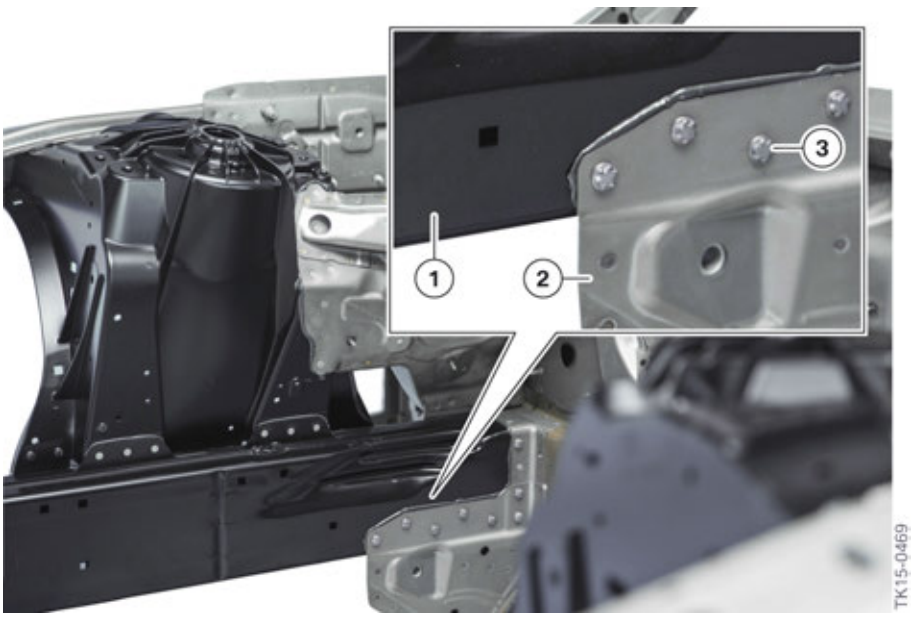

G12 Screw connection of engine support/bulkhead

Index	Explanation
1	Engine support
2	Engine support connection
3	Flow drill screw (new mounting style)

Some of the aluminium-steel connections in the G12 body structure are produced using the new body joining technique of flow drill screws. These include, for example the connection between the engine support (aluminium extruded profile) and the bulkhead carrier support (ultra-high-strength hot-formed steel).

G12 Introduction
2. Bodyshell

Flow drill screws are driven directly into the superposed sheets. When this happens, the specially shaped tip produces a flow hole and a thread is then cut. This joining technique is used **exclusively** in production.

When a flow drill screw connection has been undone, it must not be joined again by means of flow drill screws. This could lead to a considerable reduction in strength.

In the event of a repair according to body repair level 2 and 3, the flow drill screws are replaced by blind rivets.

2.2.3. Carbon

G12 Carbon in the body structure

G12 Introduction
2. Bodyshell

Index	Explanation
1	Roof bow (bonded, riveted)
2	B-pillar reinforcement (bonded)
3	Side frame reinforcement (bonded)
4	Transmission tunnel reinforcement (bonded)
5	C-pillar reinforcement (bonded, riveted)
6	Storage shelf (bonded and clipped)
7	Side sill reinforcement (bonded)

The body structure of the G12 is reinforced in many areas by carbon components. This makes the G12 the first large-series vehicle in the world in which carbon is used in the passenger safety cell.

Roof bow

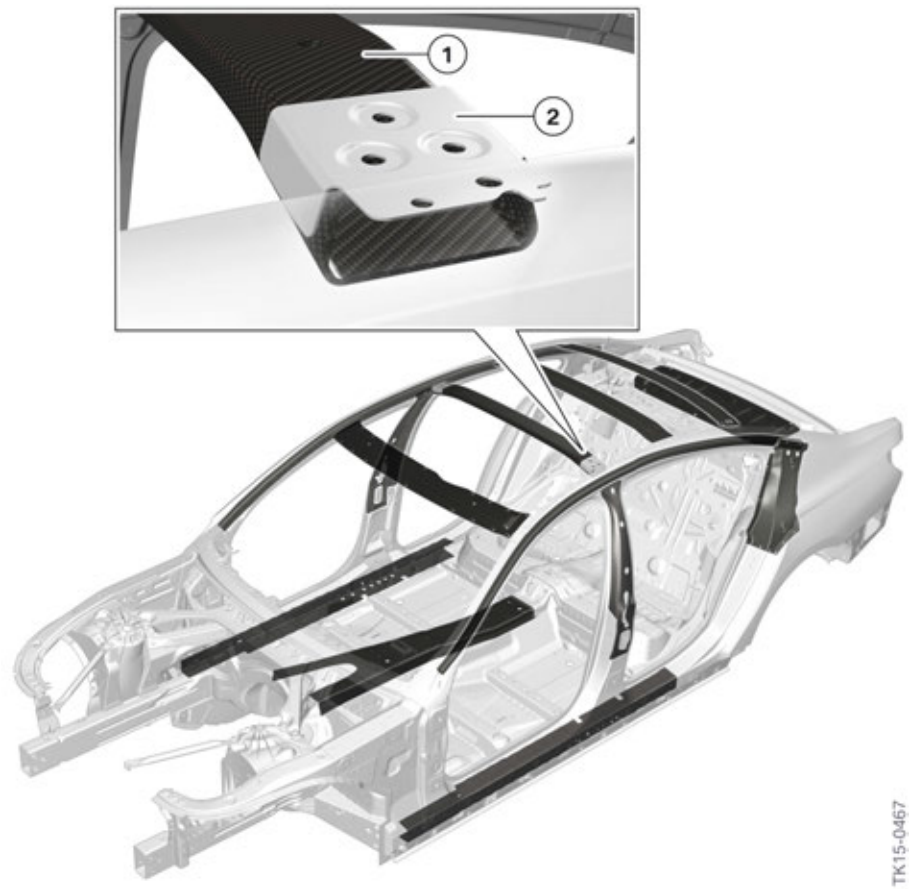

Roof bow

Index	Explanation
1	Roof bow made of carbon
2	Connection of side frame made of steel

G12 Introduction
2. Bodyshell

Some roof bows are made of a steel-carbon composite. This allows simple assembly in production

Rear window shelf

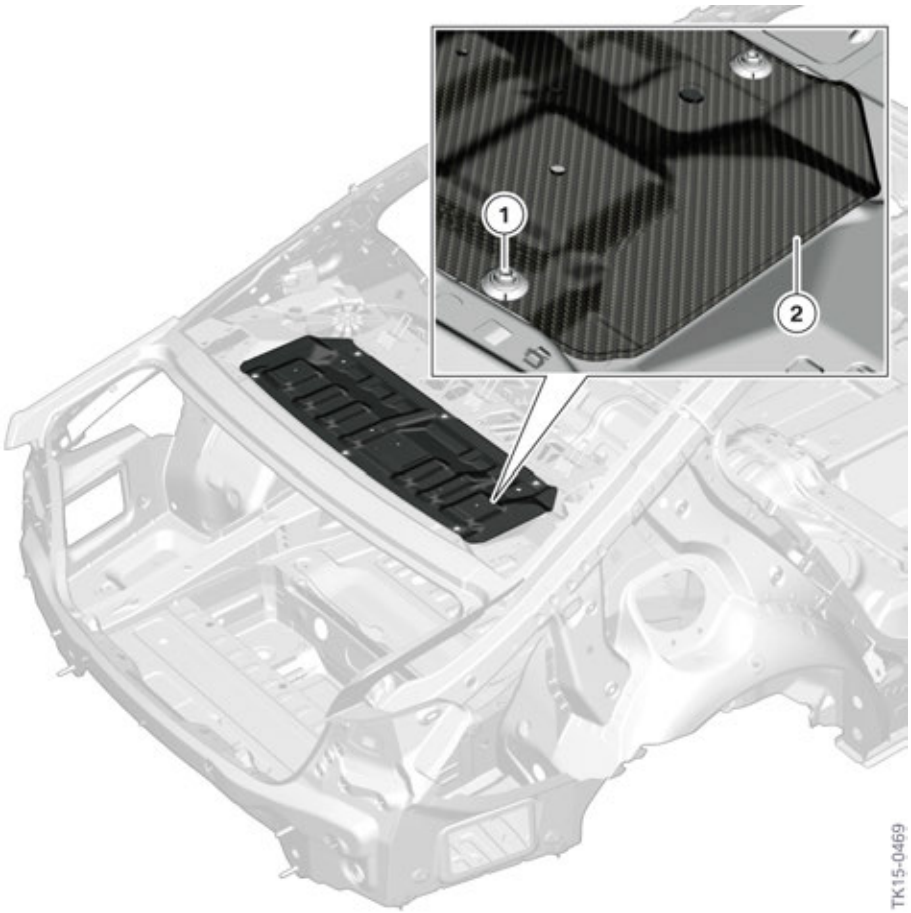

G12 Storage shelf

Index	Explanation
1	Plastic clip
2	Storage shelf made of carbon

The storage shelf of the G12 is made of carbon and is bonded and clipped together with the body structure. The clip connection is achieved by means of Lego-Fit (Ball socket). This is a type of press stud joining method which is used in production to fix the storage shelf in position. Lego-Fit (Ball socket) connections consist of a steel ball integrated in the body on the one side and a plastic clip on the opposite side.

G12 Introduction

3. Body Repair Level 1

Taking into account the repair stages of the workshop information system of BMW, the body repair work in the technical training is divided into three repair levels. Each of the three Body Repair Levels includes certain prerequisites for the training of the employees and for the workshop equipment.

The special characteristics of the add-on body parts and the materials used in the outer body skin are described in this chapter. However, the basic functions of the roof and the outer body skin components made of plastic are the same as on other current BMW models. For this reason, these components will not be described in detail here.

3.1. Outer body skin materials

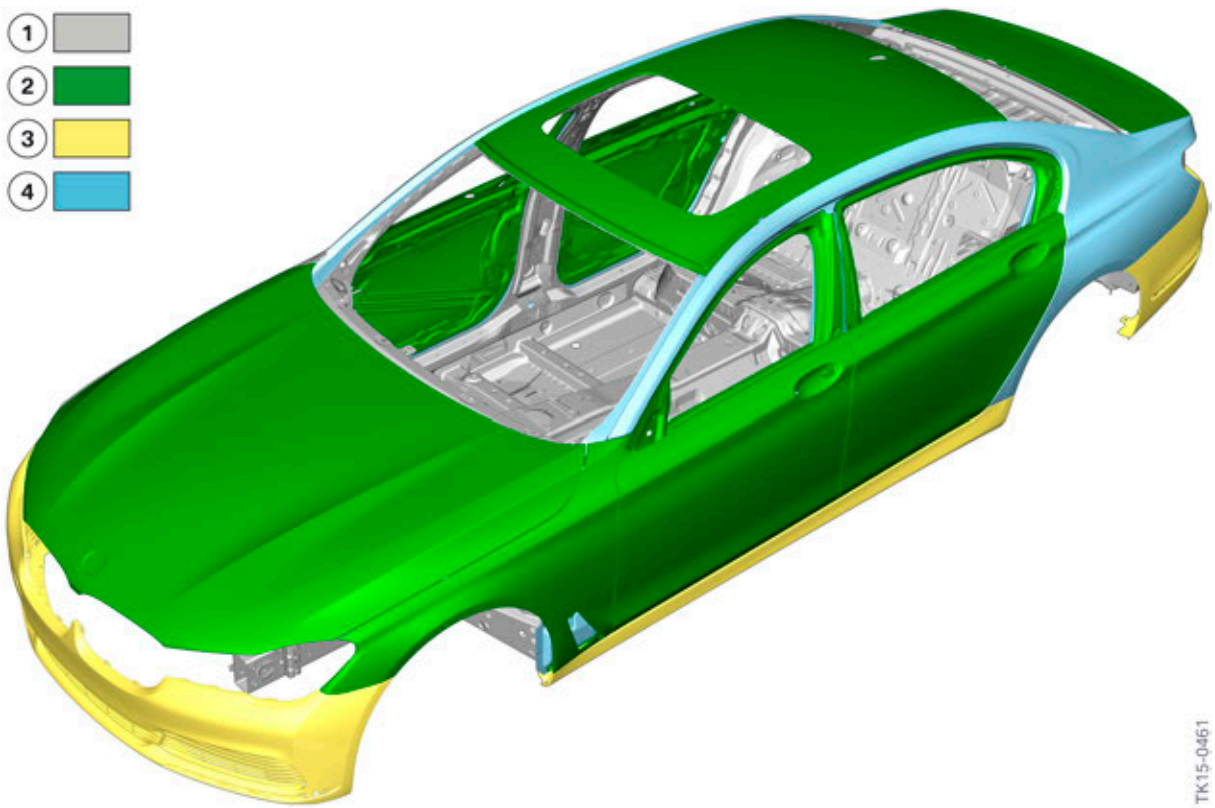

G12 outer body skin

Index	Explanation
1	Other steel grades
2	Aluminium
3	Plastic
4	Deep-drawing steel

As on the predecessor F01/F02, the roof, doors, hood and front fenders are made of aluminium. The G12 trunk lid is also made of aluminium.

The bumper panels at front and rear as well as the side sills are made of plastic (PP + EPDM) as before. However, further development of this material made it possible to reduce the density and weight.

G12 Introduction
3. Body Repair Level 1

3.2. Front side panel

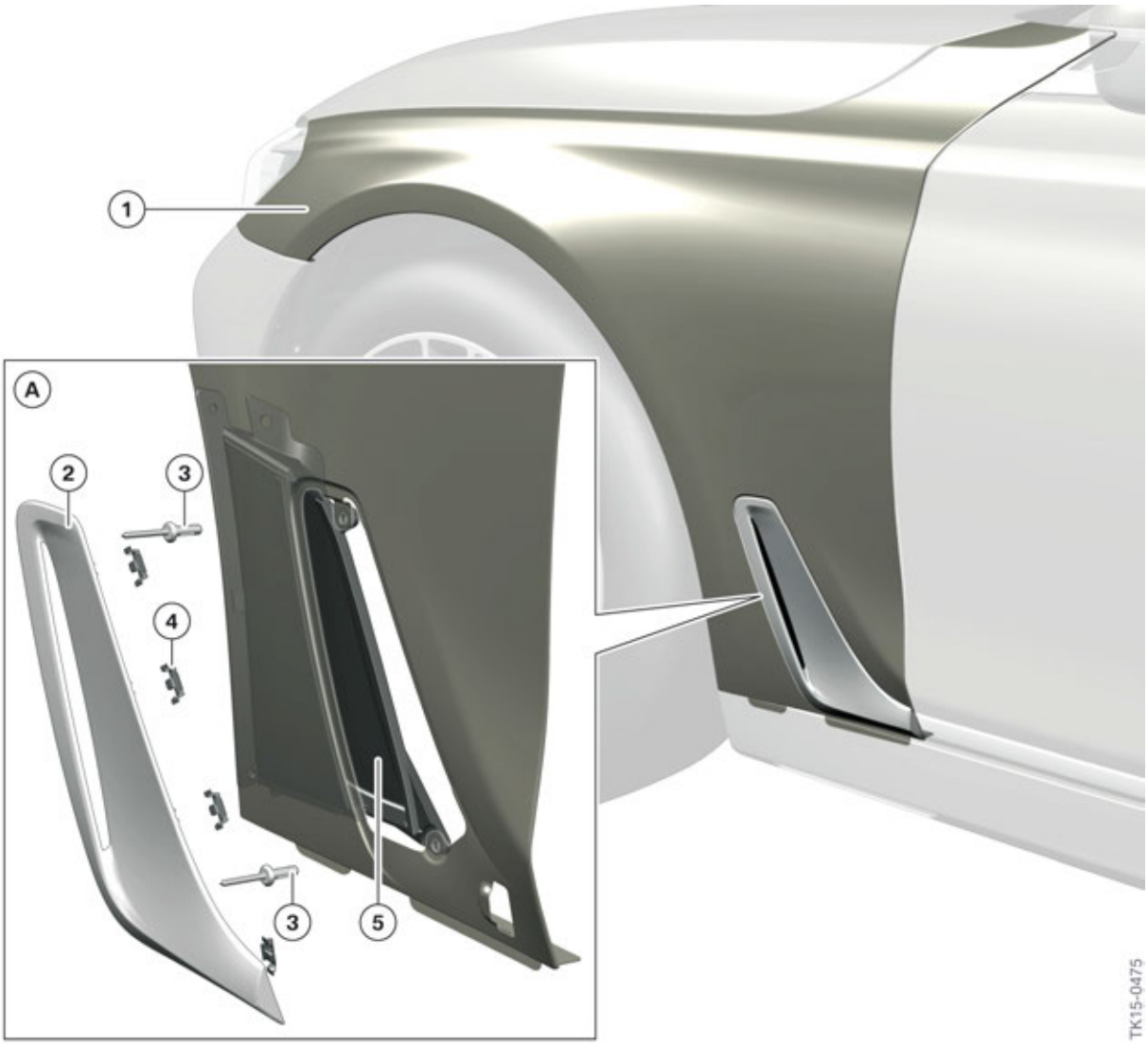

G12 Front side panel

Index	Explanation
A	Air Breather mounting
1	Front left side panel
2	Air Breather trim
3	Expanding rivet
4	Trim mounting clips
5	Air duct

G12 Introduction

3. Body Repair Level 1

The Air Breather installed for the first time in the F34 is provided with chrome trim in the G12. This is fitted from the front in X-direction and locked in position at the rear in Y-direction by 4 metal clips. The air duct is attached to the front side panel by means of expanding rivets.

3.3. Doors

3.3.1. Front door

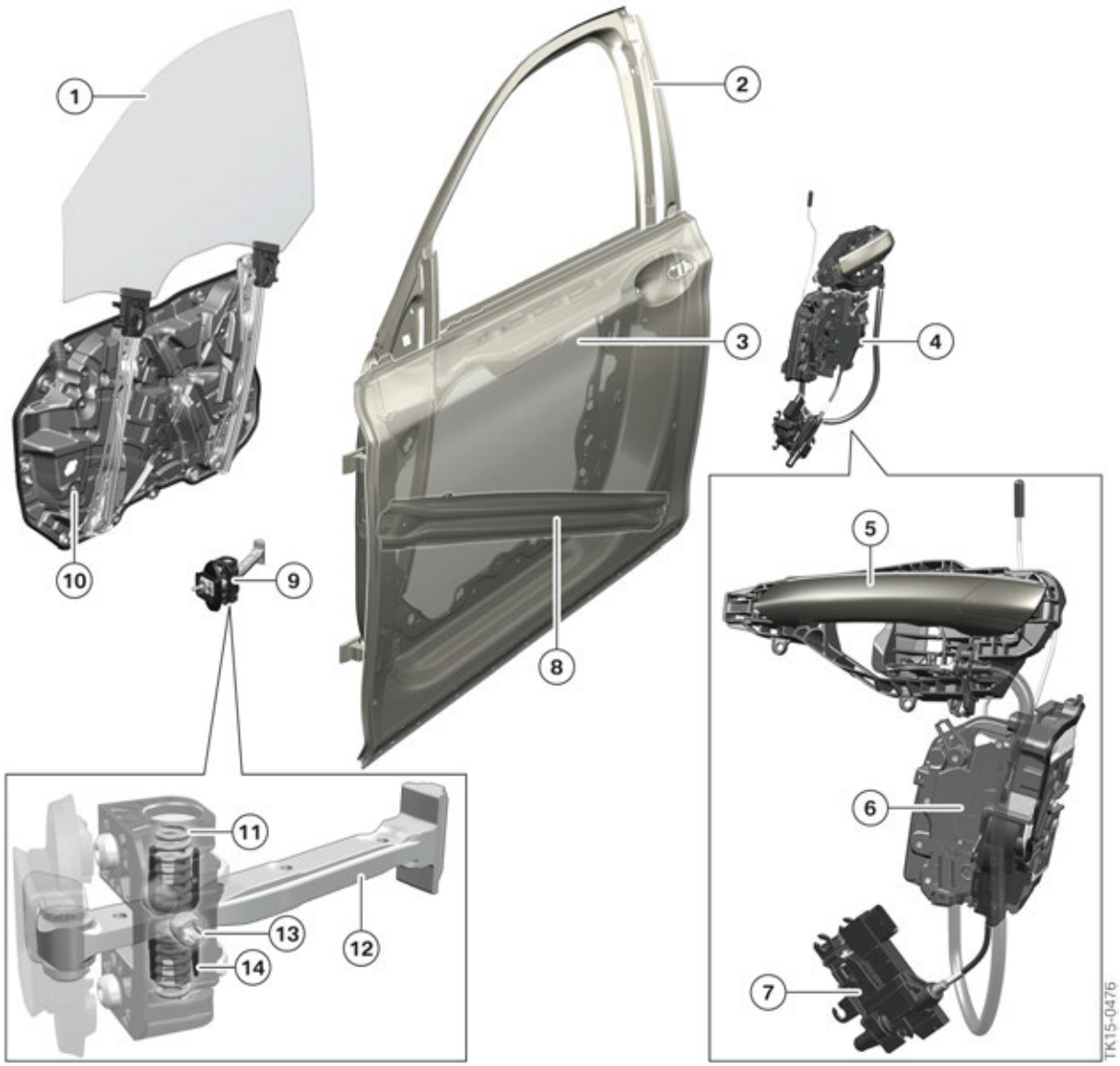

G12 Driver's door structure

G12 Introduction

3. Body Repair Level 1

Index	Explanation
1	Side window in driver's door
2	Door structure
3	Door outer skin
4	Door lock
5	Outer door handle mechanism
6	Rotary striker lock
7	Automatic Soft Close system
8	Side impact protection
9	Door stop
10	Lightweight support
11	Coil spring
12	Retaining strap
13	Set screw
14	Sliding element

The front and rear doors essentially have the same structure. The descriptions in this chapter refer to the driver's door.

Like on the predecessor, the doors of the G12 have an aluminium shell design. The aluminium supporting structure is connected with the aluminium outer skin by innovative laser welding technology.

The stepless door stop holds the door in any position. The moment of friction required for this is produced by 2 set screws which are tensioned at the sides against the retaining strap. The set screws are adjusted in production and cannot then be adjusted again. In addition, 2 spring-loaded sliding elements hold the door in defined detent positions when the vehicle is inclined. These positions are determined by the geometry of the retaining strap. The compact design of the door stop makes it possible to achieve a weight saving for all door stops of approx. 2.5 kg / 5.5 lbs compared with the door stops on F01/F02.

The door lock optionally features automatic soft-close. Emergency operation is possible via the integrated lock cylinder.

The side impact protection is made of high-strength steel.

G12 Introduction

3. Body Repair Level 1

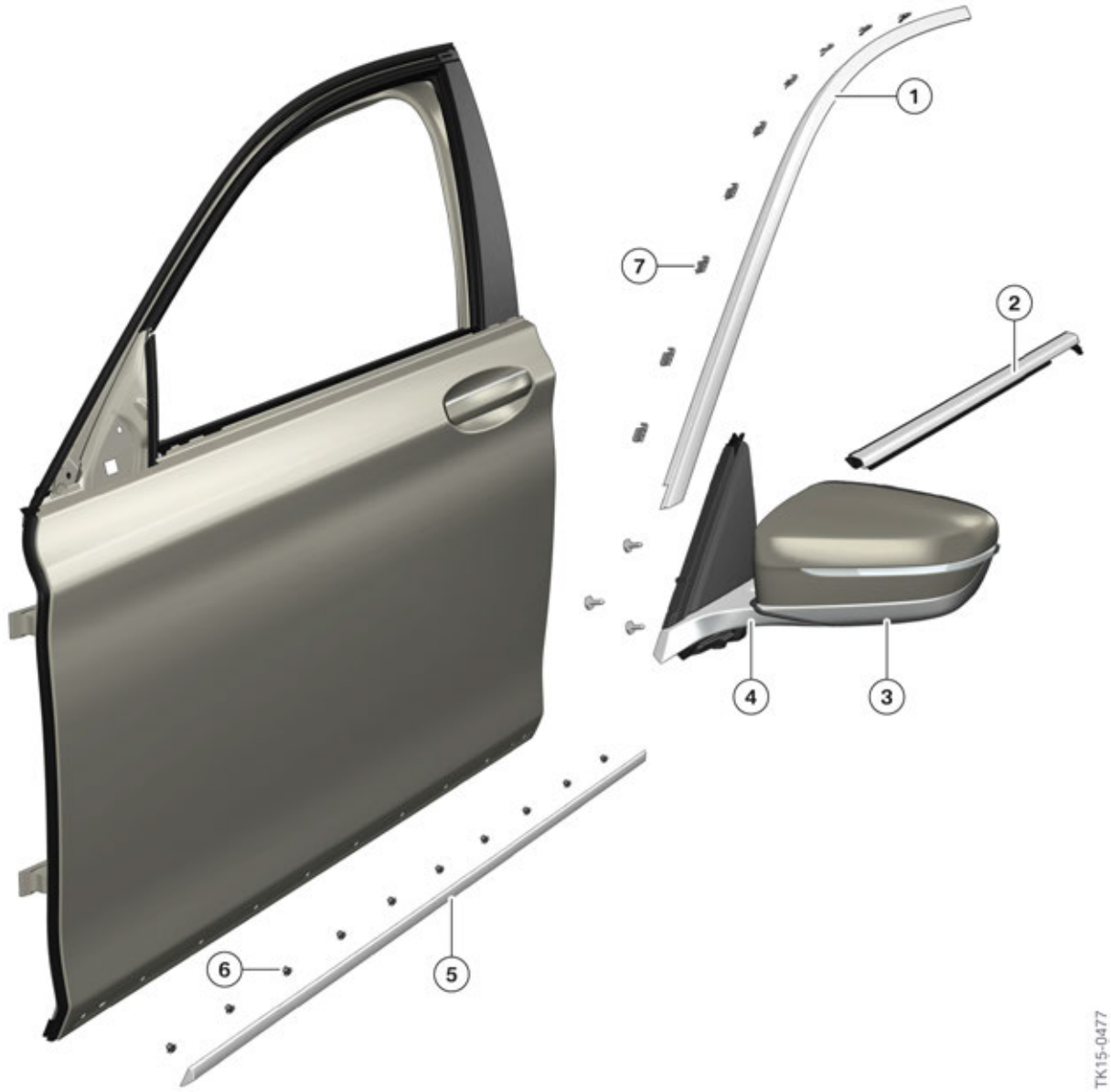

G12 Trim strips on front door

Index	Explanation
1	Trim strip on window frame
2	Cavity trim
3	Trip strip on mirror body
4	Trim strip on mirror base
5	Bottom trip strip
6	Mounting clips
7	Mounting clips

G12 Introduction
3. Body Repair Level 1

3.3.2. Rear door

G12 Rear door mountings

Index	Explanation
1	Trim strip mounting on window frame
2	Quarter glass mounting
3	Bottom trip strip
4	Mounting clips

A special feature of the rear doors is the one-piece design of the cavity strip and window frame trim strip. This is secured by means of 2 screws in the area of the Hofmeister kink. The other trim strip is locked in position as before. The quarter glass is screwed into place like on the F01/F02.

G12 Introduction

3. Body Repair Level 1

When tightening the screws, the tightening torque specified in the ISTA workshop information system must be observed exactly.

3.3.3. Lightweight support

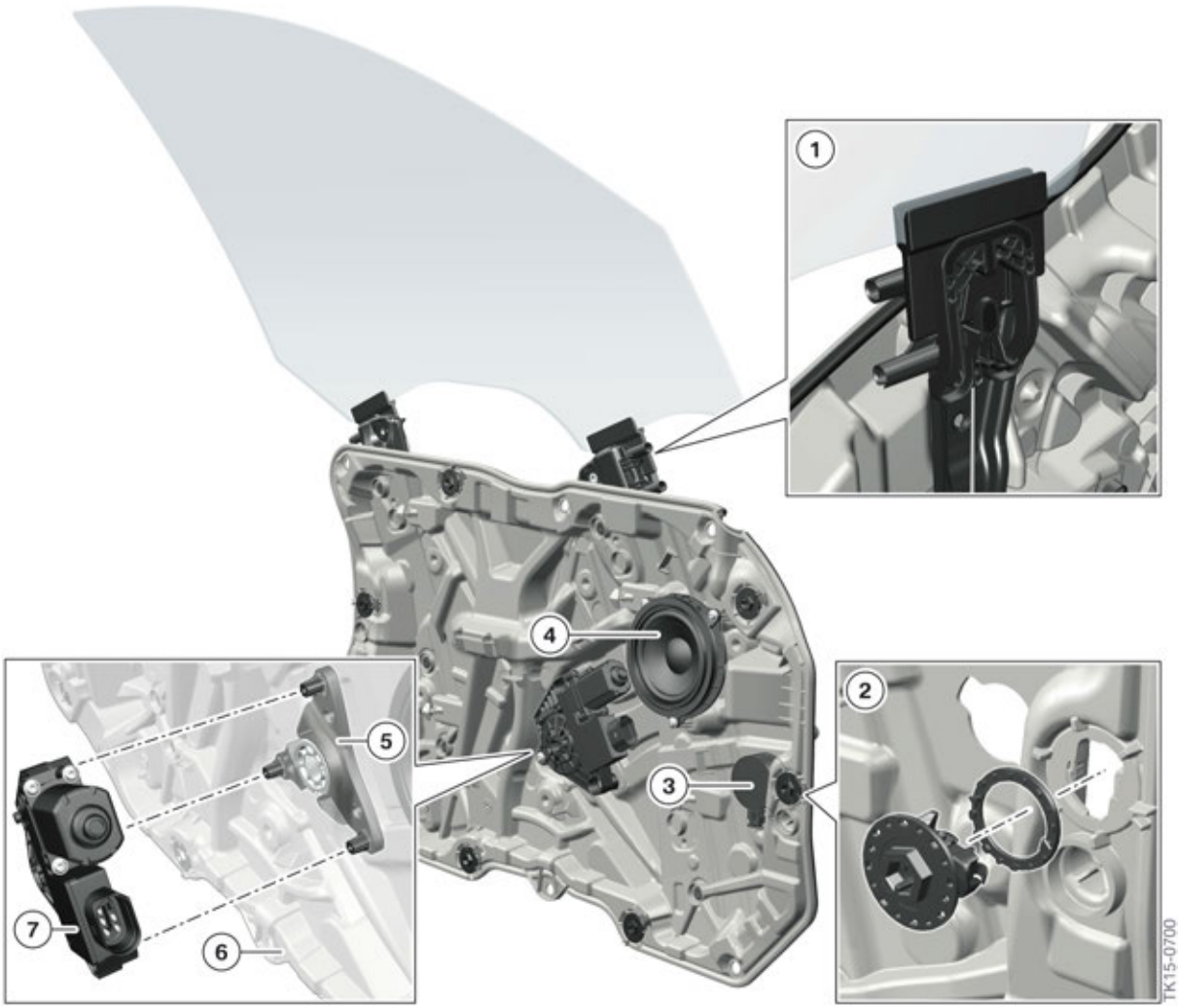

G12 Lightweight support for driver's door

G12 Introduction

3. Body Repair Level 1

Index	Explanation
1	Side window latch mechanism
2	Bayonet fitting
3	Driver's door airbag pressure sensor
4	Driver's door speaker
5	Power window mechanism
6	Lightweight support
7	Power window motor

The lightweight supports of the front and rear doors have essentially the same design.
The descriptions in this chapter refer to the lightweight support for the driver's door.

The lightweight support is mounted on the door structure by means of screws and bayonet fittings. It divides the interior of the door into a dry side and a wet side. The dry side is closed off to the inside by the door trim panel and the wet side is closed towards the outside by the door outer skin. Sensitive components – such as speakers, airbag sensors and electric drives – are located on the dry side and are protected against moisture.

The power window mechanism is based on a cable mechanism. The electrical drive force is provided by an electric motor installed on the dry side of the lightweight support.

⚠

The door airbag sensors must not be cleaned with compressed air otherwise they will be destroyed.

The seals of the lightweight supports must not be damaged in order to guarantee proper functioning of the airbag sensors in the doors.

G12 Introduction
3. Body Repair Level 1

3.4. Front end

3.4.1. Design

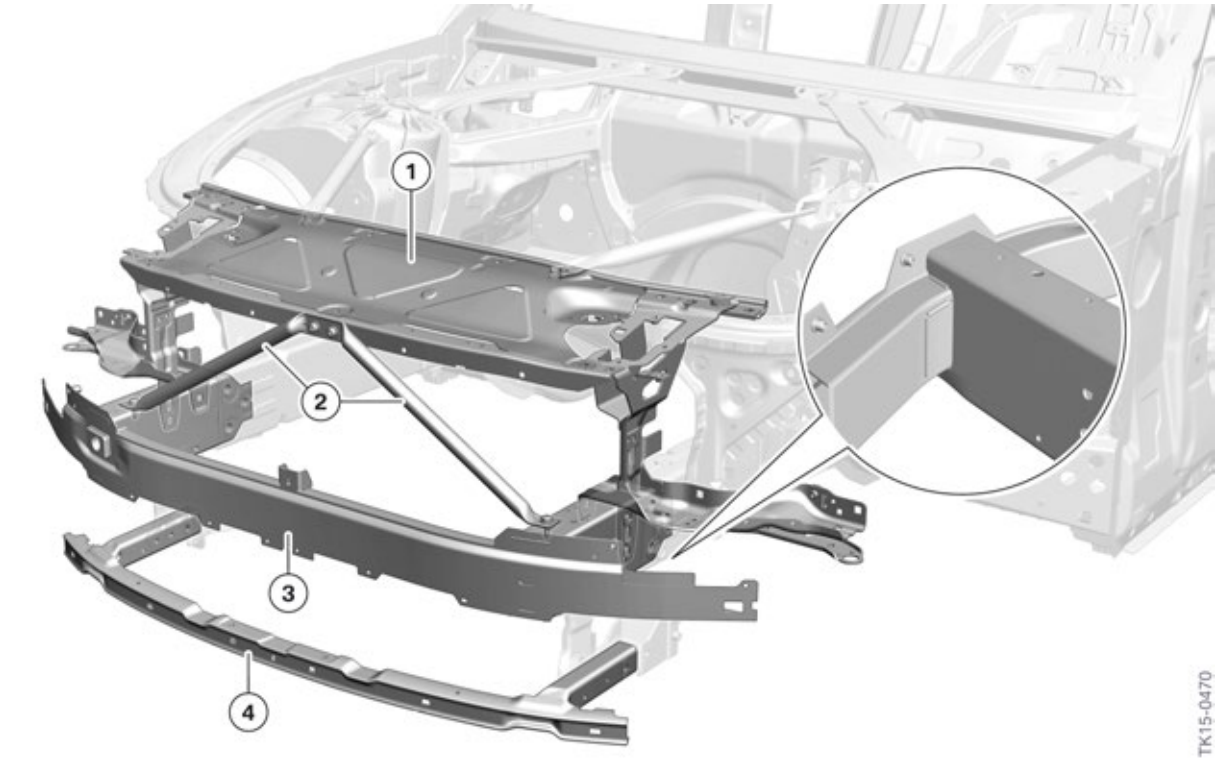

G12 Front end

Index	Explanation
1	Carrier
2	Reinforcement struts
3	Bumper support with deformation elements
4	Bottom bumper support

The front end makes a significant contribution to the rigidity of the front structure. At the same time, it serves as a support for components such as the headlights, auxiliary radiators and hood catches.

The front end also performs important tasks for crash safety:

- Complete absorption of the impact energy for accidents at slow speeds up to approx. 16 km/h / 10 mph.
- Avoidance of excessive loads on knee and hip joints in the event of an accident with pedestrians.
- Load distribution between the right and left vehicle halves in the event of a one-sided head-on collision.

G12 Introduction
3. Body Repair Level 1

In the G12, it has been possible to successfully meet the increased requirements for crash safety in spite of a weight reduction of the front end compared with the F01/F02. This was achieved mainly through the use of high-strength aluminium. A further reason is the one-piece design of the bumper support and deformation elements. The use of welded connections instead of screw connections saves weight and at the same time increases rigidity.

Additional US version components

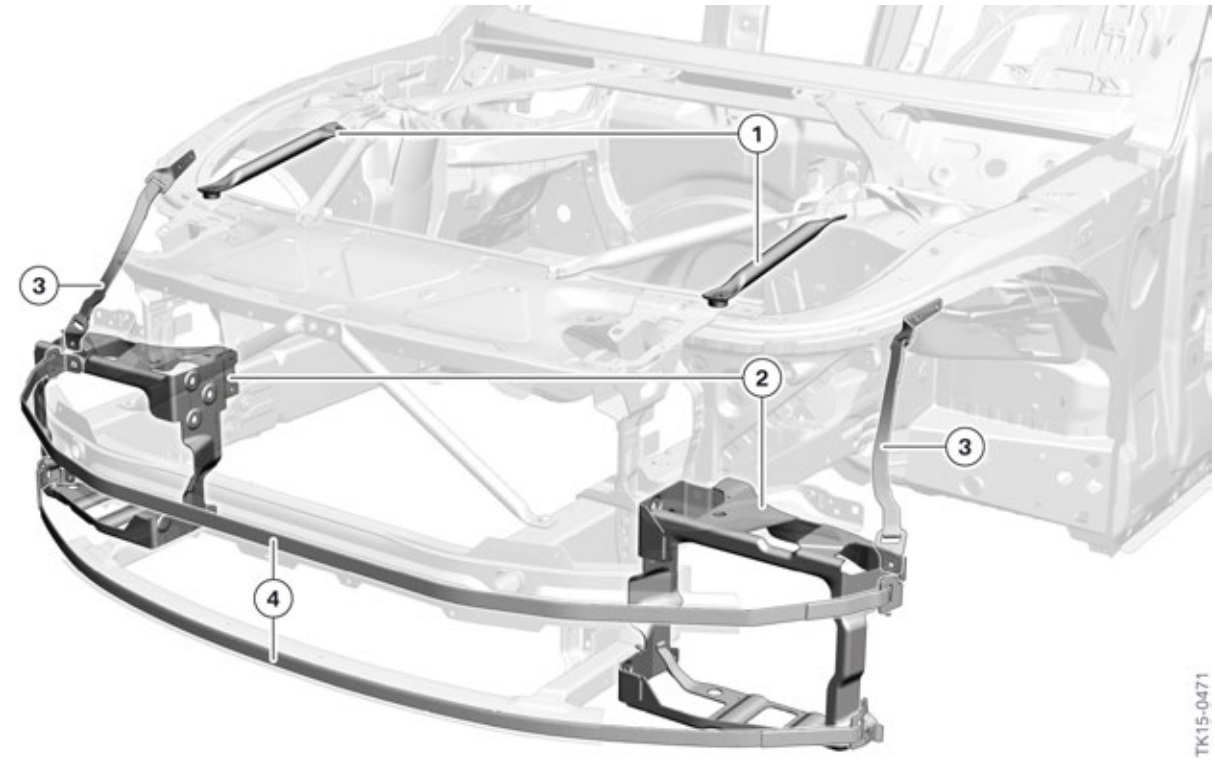

Additional G12 Front end components

Index	Explanation
1	Additional struts
2	Crash frame
3	Tensioning strap for carrier support
4	Front tensioning straps

US version vehicles must pass an additional crash test, the small overlap test, for the purpose of optimum insurance classification.

The small overlap in the "Small overlap test" means that there is, in principle, a risk that the front wheel will damage the bulkhead. This is avoided in the G12 in US version by additional components in the front end.

In the event of a corresponding head-on collision, the crash frame is pressed against the front wheel. As a result, the rim is guided so that the wheel is prevented from turning in. The tensioning straps stabilize the position of the respective crash frame.

3.4.2. "Small Overlap" crash test

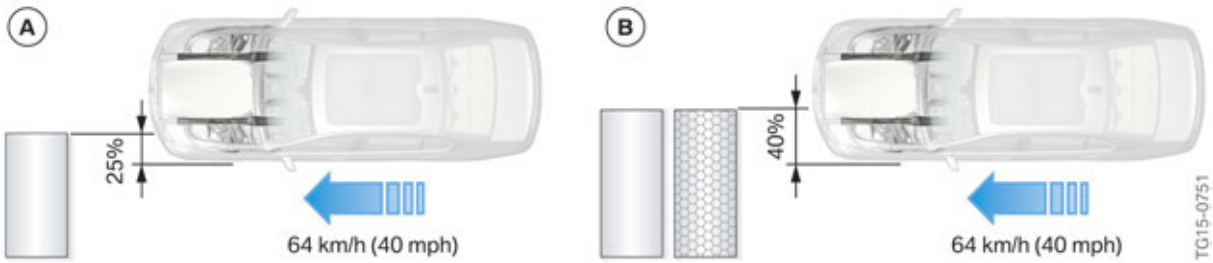

Crash test comparison US-IIHS

Index	Explanation
A	“Small Overlap” crash test with rigid barrier and an overlap of 25 % (IIHS*)
B	“Head-on collision crash test” with honeycomb barrier and an overlap of 40 % (EURO-NCAP) Not US

*IIHS: Insurance Institute for Highway Safety.

In the "Small Overlap" test, the vehicle is driven against a rigid barrier at a speed of 64 km/h / 40 mph. The overlap is only 25 % so that the impact energy cannot be transferred into the body structure directly via the engine support. Instead, the load path is via the front wheel to the side sill and via the bulkhead carrier support to the side frame.

3.5. Trunk

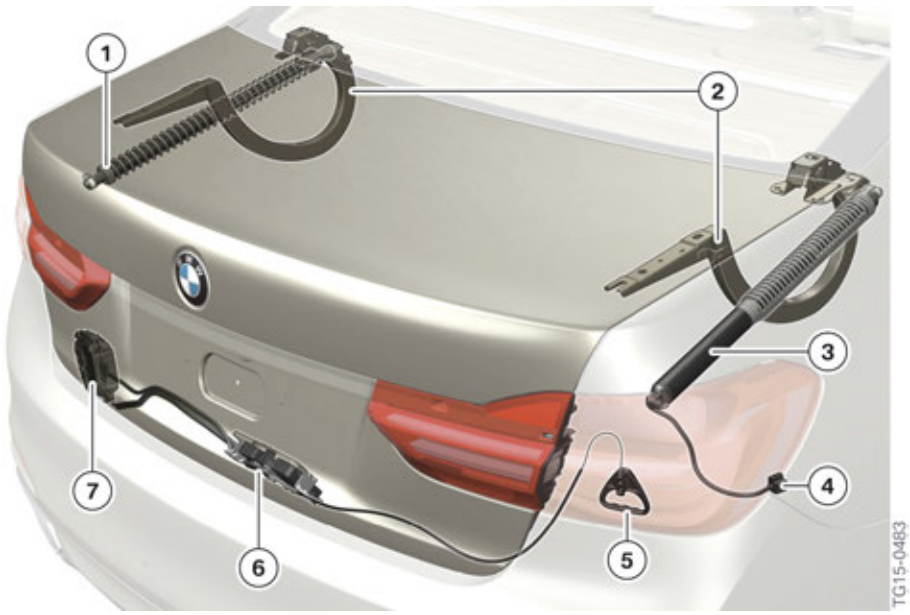

G12 Overview of Trunk

G12 Introduction
3. Body Repair Level 1

Index	Explanation
1	Tension spring (without damping element)
2	Trunk hinge
3	Electric spindle drive
4	Plug connector for spindle drive
5	Emergency release
6	Trunk lock
7	Electric motor for automatic soft-close system

The trunk of the G12 is made completely of aluminium for the first time. This made it possible to realize a weight saving of approx. 5.5 kg / 12 lbs compared with the trunk of the F02. The outer skin components area connected with each other by means of laser weld seams.

The G12 is equipped as standard with automatic trunk operation. The trunk is opened and closed by means of a spindle drive. Whereas other current BMW vehicles are equipped with one spindle drive each on the right and left sides, the G12 has a single spindle drive on the right side.

The following actuation options are available for the trunk, depending on the vehicle equipment:

	Opening	Close
Outer Trunk button	X	X
Inner Trunk button		X
Remote key/ID transmitter	X	
Button in driver's door	X	X
Contactless via sensors in the bumper	X	X
Emergency release via handle in the luggage compartment	X	

The trunk trim panel is made largely of kenaf. This is a natural fiber material that is already successfully used in the door trim panels of the BMW i3. Kenaf is characterized above all by its low weight and environmental friendliness. The visible surface of the trunk trim panel is made of black velour.

G12 Introduction

3. Body Repair Level 1

3.6. Light carpet

G11 Light carpet

The light carpet is a graphic projection in the entrance and exit area on the driver's and passenger's sides. It is standard for the G12. For more information about the light carpet, refer to the “General Vehicle Electronics” section of this reference manual.

G12 Introduction
3. Body Repair Level 1

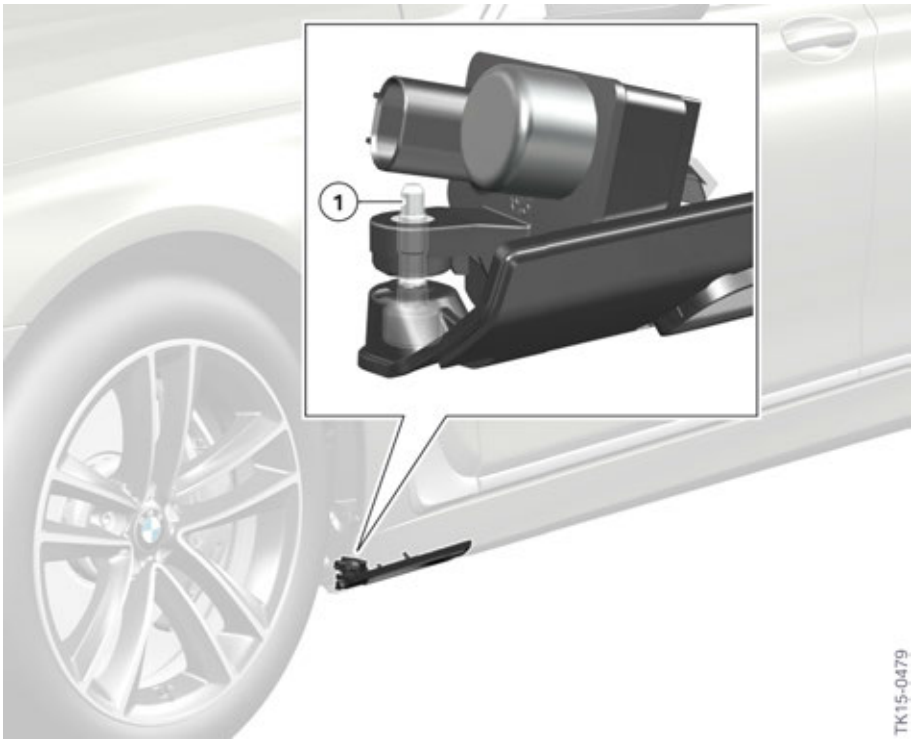

G12 Light carpet adjustment

Index	Explanation
1	Adjusting screw

The light sources are located in the front area of the side sills. The light carpet is adjusted by means of an adjusting screw in each case. For this purpose, the light source can be continuously activated using the ISTA workshop information system.

The light carpet is adjusted to a certain length between the start of the first projection line and the end of the last projection line. Attention must also always be paid to the symmetry between the left and right vehicle sides.

G12 Introduction

3. Body Repair Level 1

3.7. Panorama glass roof

3.7.1. Design

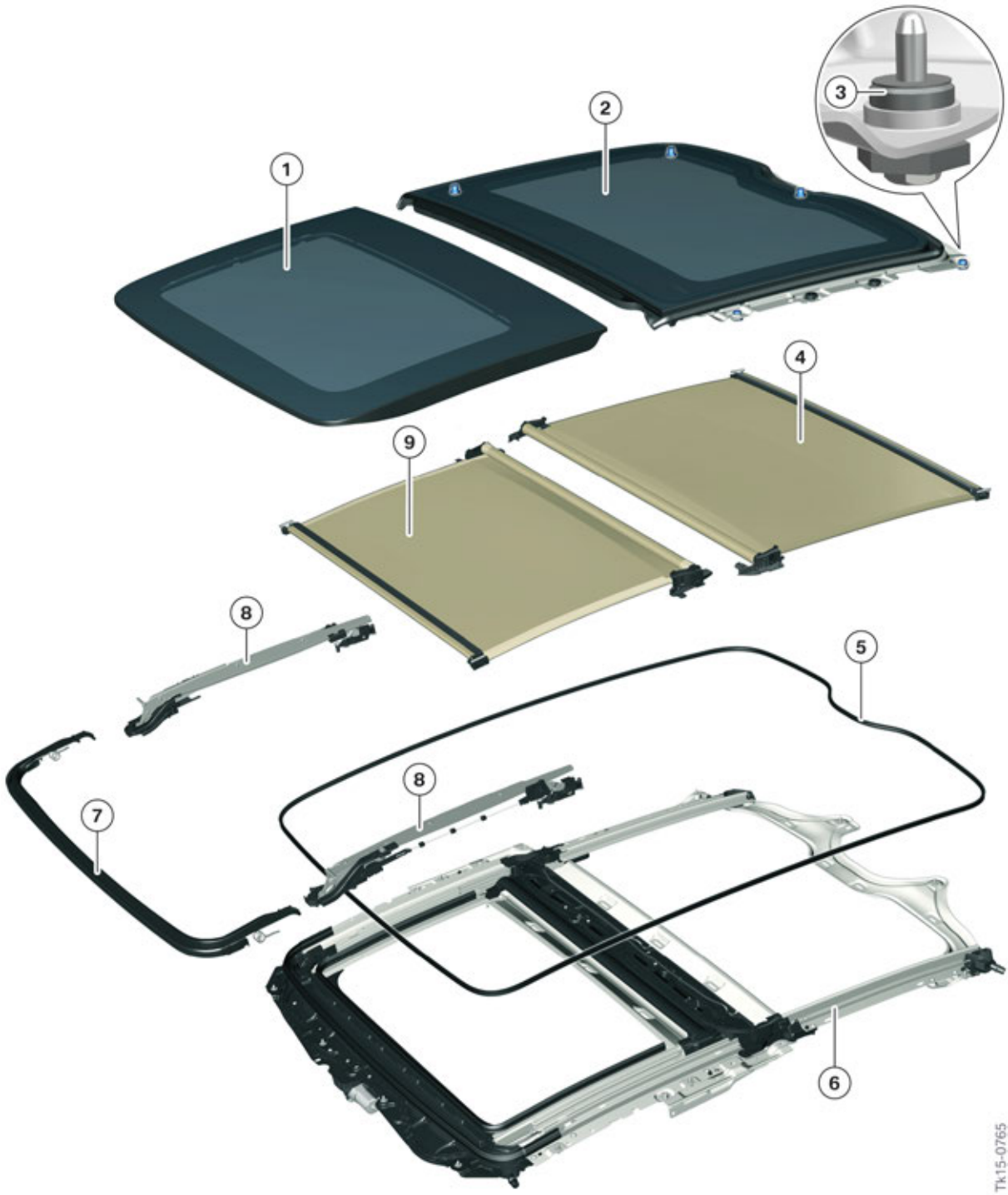

G12 panorama glass roof

Index	Explanation
1	Glass slide/tilt sunroof panel, front
2	Rear glass slide/tilt sunroof panel
3	Adjusting screw for rear glass slide/tilt sunroof panel
4	Rear panorama roof roller blind
5	Gasket
6	Panorama glass roof frame
7	Wind deflector
8	Tilt mechanism, front glass slide/tilt sunroof panel
9	Front panorama roof roller blind

The standard equipment for the G12 is the a panorama glass roof. Compared with the conventional glass slide/tilt sunroof, the panorama glass roof offers an improved feeling of spaciousness for the rear seat passengers.

The front glass slide/tilt sunroof panel can be moved externally over the rear glass panel. The rear glass slide/tilt sunroof panel is fixed and contributes to the rigidity of the body as a thrust surface.

The panorama glass roof is installed from inside. This makes it possible to omit trim elements in the edge area of the roof and a harmonious overall appearance is produced. The rear glass panel as an aperture to permit optimum positioning of the roof-mounted aerial.

3.7.2. Panorama roof roller blinds

As sun protection and noise insulation, the panorama glass roof has 2 panorama roof roller blinds, one each for the front and rear roofliner cutouts. These are available in different materials and colors.

Operation is performed via the roof function center, the buttons in the rear doors or BMW Touch Command.

The panorama roof roller blinds can be opened and closed seamlessly and independently of each other. An anti-trap mechanism is active during automatic closing.

G12 Introduction
3. Body Repair Level 1

3.7.3. Drive

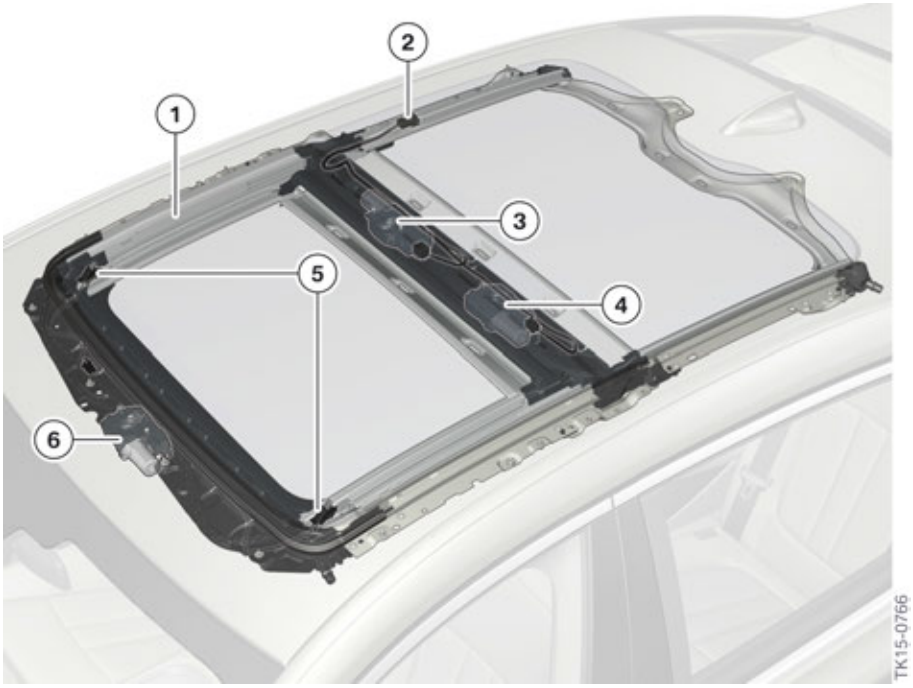

G12 Panorama glass roof frame

Index	Explanation
1	Panorama glass roof frame
2	Plug connector for panorama roof roller blinds
3	Drive unit for rear panorama roof roller blind
4	Drive unit for front panorama roof roller blind
5	Contacts for panorama roof lighting
6	Drive unit for front glass slide/tilt sunroof panel

The front glass slide/tilt sunroof panel and panorama roof roller blinds are driven by electric motors. The drive forces are transmitted to the cassette in the guide rails by means of cables.

The electric contacts of the panorama roof lighting which is option 407 (see interior equipment) of the front glass slide/tilt sunroof panel are located on the right and left in the front area of the panorama glass roof frame.

3.7.4. Functions

The panorama glass roof and panorama roof roller blinds have the following additional functions:

- **Rain closing**
  If the G12 is parked with open panorama glass roof and the rain-light-solar-condensation sensor detects rain, the front glass slide/tilt sunroof panel closes to the vent position.
- **Parking functions**
  If the G12 is parked with open panorama glass roof, the panorama glass roof will automatically move to vent position after 6 hours.
  When the vehicle is locked, the rear panorama roof roller blind is closed in order to prevent possible heating up of the rear seats and the BMW Touch Command due to solar radiation.
  When the vehicle is unlocked, the rear panorama roof roller blind is automatically moved to the position it was in before locking.
- **Convenient closing/convenient opening**
  The front glass slide/tilt sunroof panel and the panorama roof roller blind can be opened and closed via the ID transmitter.
- **Crash risk closing**
  In case of an accident, the front glass slide/tilt sunroof panel and the front panorama roof roller blind are automatically closed.

3.7.5. Notes for Service

Initialization

Initialization is frequently necessary after working on the panorama glass roof or panorama roof roller blinds. This can be recognized by the fact that automatic opening or closing of the panorama glass roof is not possible.

A function check must be performed after initialization.

⚠

No anti-trap function is available during initialization.

The procedure described in the ISTA workshop information system must always be observed.

Emergency operation

Emergency operation of the front glass slide/tilt sunroof panel is possible at the front drive unit using a hexagon socket wrench.

G12 Introduction

3. Body Repair Level 1

Installation and adjusting procedures

The components of the panorama glass roof can normally be replaced individually. It is necessary to pay attention to a number of special points to note for exchange as well as installation and disassembly.

- **Removal**
  Removal of the panorama glass roof in the workshop should be performed by at least 2 employees. Since the rear glass slide/tilt sunroof panel is secured and adjusted individually, it should also be transported individually. The panorama glass roof frame must not be lifted at the two front and rear ends. Otherwise, this may result in a kink in the middle part of the frame.
- **Assembly**
  The entire installation procedure for the panorama glass roof is performed from the vehicle interior. The rear glass slide/tilt sunroof panel is installed first and then the panorama glass frame together with front glass slide/tilt sunroof panel. The front glass slide/tilt sunroof panel must be moved to vent position before installation. A specific sequence must be observed when tightening the mounting bolts of the rear glass slide/tilt sunroof panel and the panorama glass roof frame. Leaks can occur if this sequence is not observed. Disassembly takes place in reverse order.
- **Setting**
  The rear glass slide/tilt sunroof panel is supplied pre-adjusted. Nevertheless, fine adjustment is necessary in some cases. This is performed in Z-direction by means of 5 adjusting screws. After installation of the panorama glass roof frame, the front glass slide/tilt sunroof panel is adjusted by means of its 6 mounting bolts. The trim covers inserted at the side must be removed for adjustment with installed roofliner.

⚠

The current procedures in the workshop information system must be observed for all work on the panorama glass roof.

G12 Introduction
3. Body Repair Level 1

3.8. Aerodynamics measures

3.8.1. Air flaps

G12 Air flaps

Index	Explanation
A	Top air flaps completely open
B	Top air flaps completely closed

A new generation of automatic air flap control is used in the G12. The air flaps are located at the top within the ornamental grille surround (radiator grilles) and behind the air inlets of the bumper panel.

The top air flaps are integrated in the front ornamental grille for the first time and are thus located in the direct field of view.

The top and bottom air flaps are controlled via separate actuators. When a corresponding cooling request is received, the bottom air flaps always open first and then the top air flaps. The bottom air flaps can also move to several intermediate positions. The air flaps are activated briefly when the ignition is switched on.

3.8.2. Underbody panelling

In comparison with the F01/F02, larger areas of the vehicle underbody area closed in the G12. This applies above all to the rear area. This results in reduced drag and also lower carbon dioxide emissions.

The use of textile material also improves the external acoustics.

G12 Introduction

4. Interior Equipment

The G12 sets new standards in its vehicle segment in the areas of luxury and innovation. There are significant enhancements in the vehicle interior compared to the F01/F02. The perception of the interior and all-round visibility have been improved. It was possible to significantly increase the amount of space in the rear passenger compartment.

4.1. Front overview

G11G12 Front overview

G12 Introduction
4. Interior Equipment

Index	Explanation
1	Camera for gesture control
2	Roof function center
3	Compartment for fragrance cartridges
4	12.3” Central Information Display with touch operation
5	Glove box, passenger's side
6	Locking switch, trunk
7	Center console
8	Wireless charging tray
9	Glove box, driver's side
10	tray with cup holders and cigarette lighter, front
11	Heating/air conditioning/radio control panel with touch operation (equipment-dependent)
12	12.3” instrument cluster with TFT display

The instrument panel already features a 12.3" Central Information Display (CID) as standard equipment. This display is a touch display. Some climate control functions can also be operated via touch-sensitive surfaces, depending on equipment.

The instrument cluster has an 12.3" display in the standard equipment. This allows the displays to be adapted to the respective driving situation. Some of the displays can be customized.

Some functions can be controlled contactlessly via the BMW gesture control. For example, the volume of the radio can be adjusted by a certain hand movement. In order to permit this function, a camera is installed in the roof function center.

There is a wireless charging tray in the center console for charging the optional BMW Display key (3DS). Certain smartphones (Samsung) can also be charged in the wireless charging tray. There must always only ever be one device for charging in the wireless charging tray.

In combination with the optional “Ambient Air package” (4NM), the vehicle interior can be scented with a fragrance at regular intervals. The compartment for the fragrance cartridges is located in the glove box.

The glove box contains a switch which can be used to separately lock the trunk. When the glove box is locked, the trunk can then no longer be opened without the mechanical ignition key. This is useful if the vehicle is parked by a parking service.

G12 Introduction
4. Interior Equipment

4.2. Ambient lighting

G12 Ambient lighting

The standard equipment “Ambiance lighting” (4UR) features extended scope and functionality for the G12 and includes lights in the following areas:

- Dashboard
- Door trim panels
- Front and rear door sill cover strips (strip and logo)
- Front footwell
- Front seat backrests
- Map pockets
- Rear footwell
- Door entry lights
- Light carpet in the entrance and exit area (see exterior trim)

The light design includes 6 different colors which can be selected via the menu in the Central Information Display or BMW Touch Command. The brightness of the ambient light can be adjusted independently of the interior lighting.

4.2.1. Panorama roof lighting

G12 Panorama roof lighting

In combination with the panorama glass roof , the optional equipment "Panoramic Sky Lounge LED Roof" (407) is available for the G12.

LED modules and optical fibers located at the sides illuminate the inside of the glass panels of the panorama glass roof. The light is refracted at the printed graphic and is diverted into the vehicle interior.

The lighting of the panorama glass roof can be dimmed independently of the other Ambient light elements and can also be switched on and off individually. The 6 different light colors are coupled to the Ambient light.

The lighting of the panorama glass roof is switched off automatically in the following situations:

- Panorama glass roof is opened/tilted
- Panorama roof roller blind is closed

Only the lighting in the corresponding area is switched off when the panorama roof roller blind is closed.

Further information on the LED modules and optical fibers is available in the Training Reference Manual **“G12 General Vehicle Electronics”**.

4.3. Door trim panels

Depending on equipment ZLU “Luxury Rear Seating Package”, the armrests in the front and rear door trim panels are heated.

4.3.1. Speaker lighting

On vehicles equipped with the optional (6F1) Bowers & Wilkins “High End Surround Sound System”, some speaker covers are illuminated blue. The brightness can be adjusted by means of the Central Information Display and BMW Touch Command. The speaker lighting is switched on when the vehicle is unlocked and switched off when the vehicle is locked.

4.3.2. Light saber

G12 Light saber

Index	Explanation
1	Light saber in the rear right door

Depending on equipment ZEC “Executive Package”, the G12 has additional interior lighting in the area of the B-pillars, the so-called light sabers. These are integrated in the window frames of the rear doors and have the task of creating a visual separation of the rear passenger compartment.

The lights can only be jointly switched on, off or dimmed. They light up exclusively in a warm white color. The brightness of the light sabers is reduced when the rear doors are opened in order to prevent other road users from being dazzled. When the rear doors are closed again, the light saber lights up again with the previously adjusted brightness.

Operation is possible via the following operating elements:

- Central Information Display
- BMW Touch Command
- Touch surface on right and left light sabers (capacitive sensors)

In the event of a fault, the affected light saber must be replaced as a complete unit. It is necessary to remove the door trim panel for this purpose.

4.4. Seats

4.4.1. Front seats

The following front seat versions are available for the G12:

- Power front seat, electrically adjustable, with memory.
- Multi-contour seat, electrically adjustable, with memory.

	Power front seat adjustment with memory (OE 459)	**Multi-contour seats front, electrically adjustable (option 456)**
Seat memory	Standard equipment	Standard equipment
Seat heating for driver/front passenger	OE 4HA	OE 4HA
Lumbar support	Standard equipment	Standard equipment
Active seat ventilation, front	Optional equipment 453	Optional equipment 453

The front active seat ventilation is performed via individual fans located in the seat surfaces and backrests.

The output of the seat heating in the backrests and seat cushions can be adjusted separately via the menu.

G12 Introduction
4. Interior Equipment

Seat adjustment

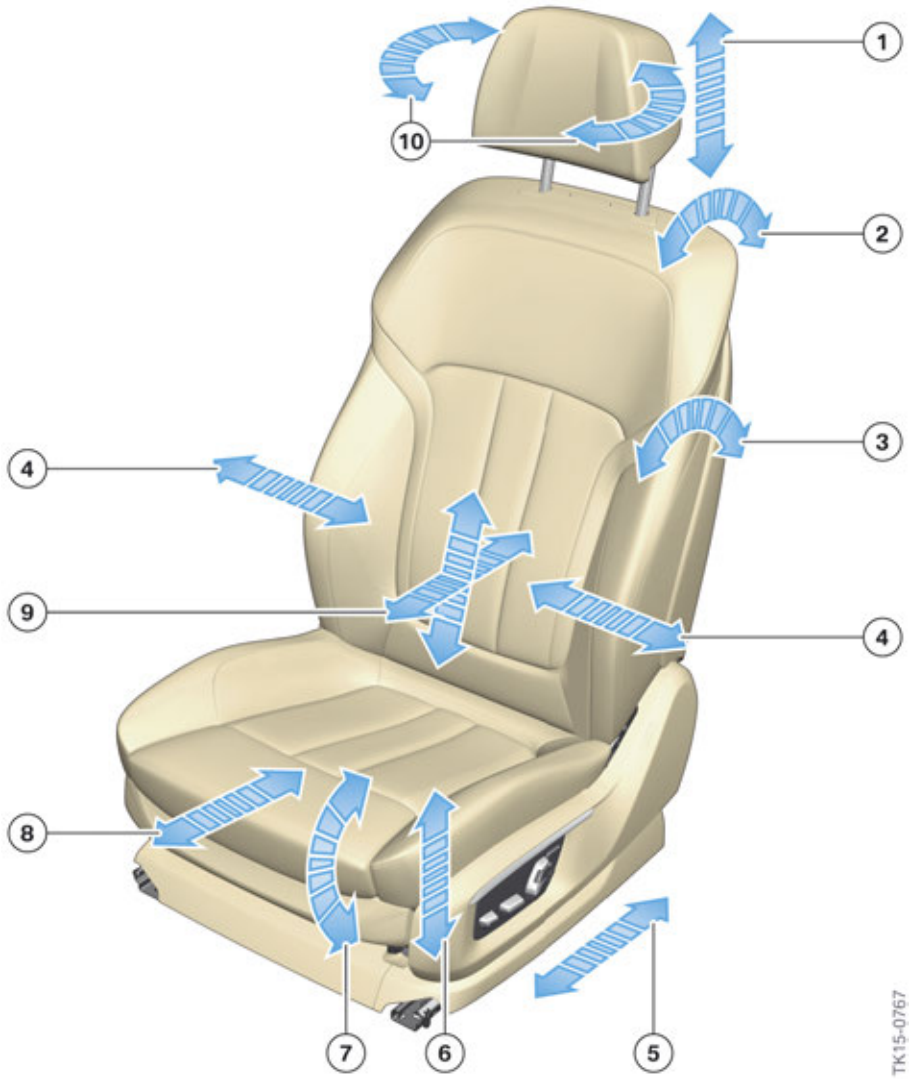

G12 Seat adjustment, front Multi-contour seat

Index	Explanation
1	Head restraint height adjustment
2	Backrest upper section adjustment
3	Backrest angle adjustment
4	Backrest width adjustment
5	Forward/back seat adjustment
6	Seat height adjustment

Index	Explanation
7	Seat angle adjustment
8	Seat depth adjustment
9	Lumbar support
10	Head restraint side bolster adjustment (mechanical)

G12 Seat adjustment, front seat

Index	Explanation
A	Display on Central Information Display (backrest angle adjustment forwards)
B	Seat adjustment switch, driver's seat

The seat adjustment switch has 5 touch-sensitive sensors. The adjustment is already shown on the Central Information Display (CID) before actuation takes place on the corresponding switch.
The movement of the corresponding seat component is then displayed on the CID during seat adjustment. The display disappears again after seat adjustment has been completed.

Further information is provided in the Training Reference Manual **“G12 Displays and Controls”** and **“G12 General Vehicle Electronics”**

Captain's chair

In the equipment specifications “Rear Executive Lounge Seating Package” (ZRE), the front passenger seat on the G12 has extended functionality. As a result, the occupants in the rear seat on the passenger's side benefit from maximum visibility and legroom. This version of the front passenger seat is called “captain's chair”.

G12 Introduction

4. Interior Equipment

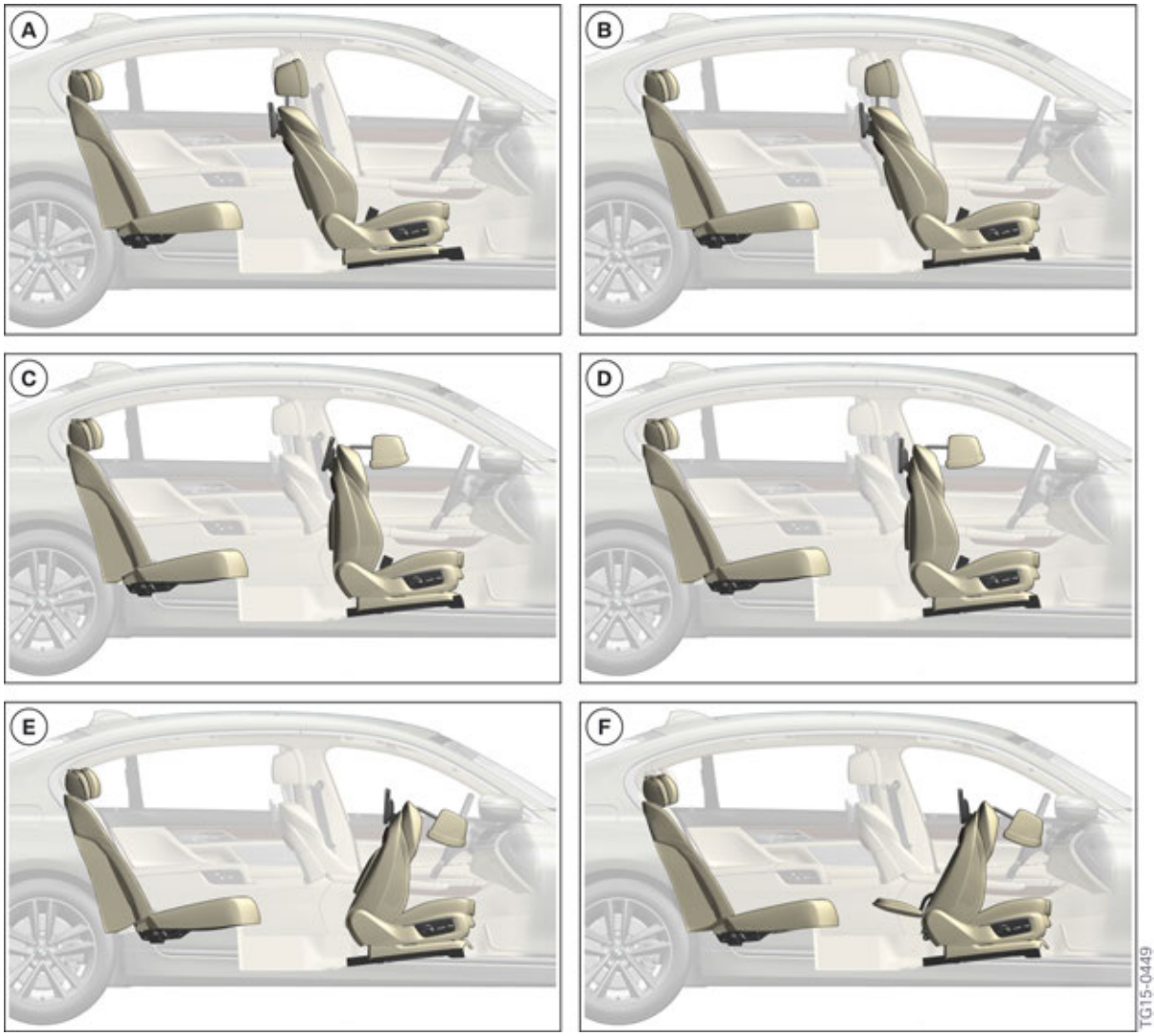

G12 Captain's chair adjustment

Index	Explanation	Customer benefit
A	• Front passenger seat is in initial position	
B	• Front passenger seat moves forward to end position • Front passenger seat moves down to end position	Increased legroom
C	• Seat backrest angle adjustment to vertical position • Head restraint folds fully forwards	Increased visibility

Index	Explanation	Customer benefit
D	• Rear compartment display on front passenger seat is adjusted	Optimum view of display screen
E	• Backrest angle adjustment moves to front end position • Front passenger seat moves forward to extended end position (+ approx. 90 mm)	Maximum legroom
F	• Footrest on front passenger seat folds out	Reclining seat position

The front passenger seat has an extended adjustment range in forward direction for the forward/back seat adjustment, a maximized backrest angle, a folding head restraint as well as an integrated, fold-down footrest.

During adjustment of the front passenger seat, the right rear seat is adjusted to a comfortable reclining position.

The following front passenger seat functions are **not** available in the "captain's chair" version:

- Backrest width adjustment
- Backrest upper section adjustment
- Lumbar support
- Height adjustment of head restraint
- Massage function

G12 Captain's chair button

The "captain's chair" is operated by means of a button in the rear door on the passenger's side.
The preset end position can be manually adjusted and saved by means of the memory function.

It is not possible to have full travel to the extended position if the front passenger seat is occupied. The Captain’s chair will only move forward and then stop. Occupancy of the seat is detected by means of the seat occupancy sensor or the seat belt buckle. It is possible to deactivate the Captain’s chair by pressing and activating the window lock button on the driver’s side door switch block. By pressing and activating the window lock button, the passengers cannot activate any seat adjustment functions or operate the windows via buttons on the door/center console or the BMW Touch Command.

⚠

Depending on equipment, the front seats have a side airbag and crash-active headrests. Information on this can be found in the Training Reference Manual **“G12 Passive Safety Systems”**.

4.4.2. Rear seats

The G12 is equipped with a rear seat bench with 3 seats and a fold-down center armrest. In the equipment specification “Comfort seats in the rear passenger compartment, electrically adjustable” option code (460), the rear seat passengers have the following adjustment options on the two outer seats:

G12 Seat adjustment, rear comfort seat

Index	Explanation
1	Head restraint height adjustment
2	Backrest upper section adjustment
3	Backrest angle adjustment
4	Forward/back seat adjustment
5	Lumbar support
6	Seat angle adjustment
7	Head restraint side bolster adjustment (mechanical)

A further equipment feature is the removable Alcantara pillow on the comfort head restraints.

The rear seats are adjusted via the operating elements in the center armrest or BMW Touch Command.

Rear Executive Lounge Seating Package (ZRE)

The following equipment is available for the G12:

Equipment	Executive Lounge Seating (OE 7GZ)
Number of seats in rear passenger compartment	2
Comfort seats in the rear	X
Captain's chair	X
Rear console	X
BMW Touch Command	X
Table in the rear console	X
Massage function in rear passenger compartment	X
Active seat ventilation in rear passenger compartment	X
Active seat ventilation, front	X
Rear-seat entertainment Experience	X

X Included in this equipment package.

4.4.3. Massage functions

Extensive massage functions are available in the G12 for the front seats option code (4T7) and rear seats option code (4T6). 8 different massage programs can be used to activate or relax muscles or relieve the strain on the back. It is possible to choose between 3 different intensity levels.

The 8 massage programs can be divided into 3 categories:

- **Activation**
  In the case of the activation programs, it is possible to choose between the body areas of pelvis, upper body or full body. During the massage, the strain on the spine is relieved by targeted body movements.
- **Relaxation**
  The relaxation programs offer a choice between the body areas of back, shoulders or lumbar region. The muscles are relaxed by the massage.
- **Vitalization**
  The vitalization programs comprise mobilisation and relaxation elements. The occupant can choose between the body areas of upper body and full body. The combination of movement and massage ensures optimum relaxation and recuperation particularly on long journeys.

The massage programs can be selected and adjusted by means of the following operating elements:

- Central Information Display (front)
- BMW Touch Command (rear)
- Rear seat entertainment system (rear)

G12 Introduction
4. Interior Equipment

Without the equipment “BMW Touch Command” (6U9) or “Rear seat entertainment Experience” (6FR), only the standard massage program can be operated from the rear passenger compartment. This is done by means of a button in the door.

Body training in rear passenger compartment

G12 Massage display on rear compartment display

Index	Explanation
1	Please press both shoulders against the seat with equal force.

Active interaction between the rear seat passengers and rear seat is offered for the first time at BMW for the rear seats of the G12 . This function allows the occupants to relax on long journeys and to regenerate their back by active movements. For this purpose, the customer is given instructions to perform specific physical movements. These are evaluated and then displayed to the customer. Following the body training, the customer is provided with an overview of his training success. The customer's body movements are detected by the pressure increase in the respective massage cushion. Additional sensors are not required for this function.

The rear passenger compartment body training is part of the massage function for the rear passenger compartment (4T6). However, it is available only in combination with the optional equipment "Rear seat entertainment Experience” (6FR) since the instructions are displayed on the rear compartment displays.

G12 Introduction
4. Interior Equipment

Design

G12 Massage seat, front, driver's side

Index	Explanation
1	Air cushion on inner backrest (massage)
2	Air cushion for shoulders (massage)
3	Air cushion for lumbar region (massage)
4	Air cushion for lumbar support
5	Air cushion for seat surface (massage)
6	Seat pneumatics module pump
7	Seat pneumatics module (control unit and valve block)

The massage functions are controlled by the respective seat pneumatics modules.

When working on the pneumatic components, it must be ensured that the lines are routed exactly, otherwise there is a risk of the lines being kinked.

4.5. Rear console

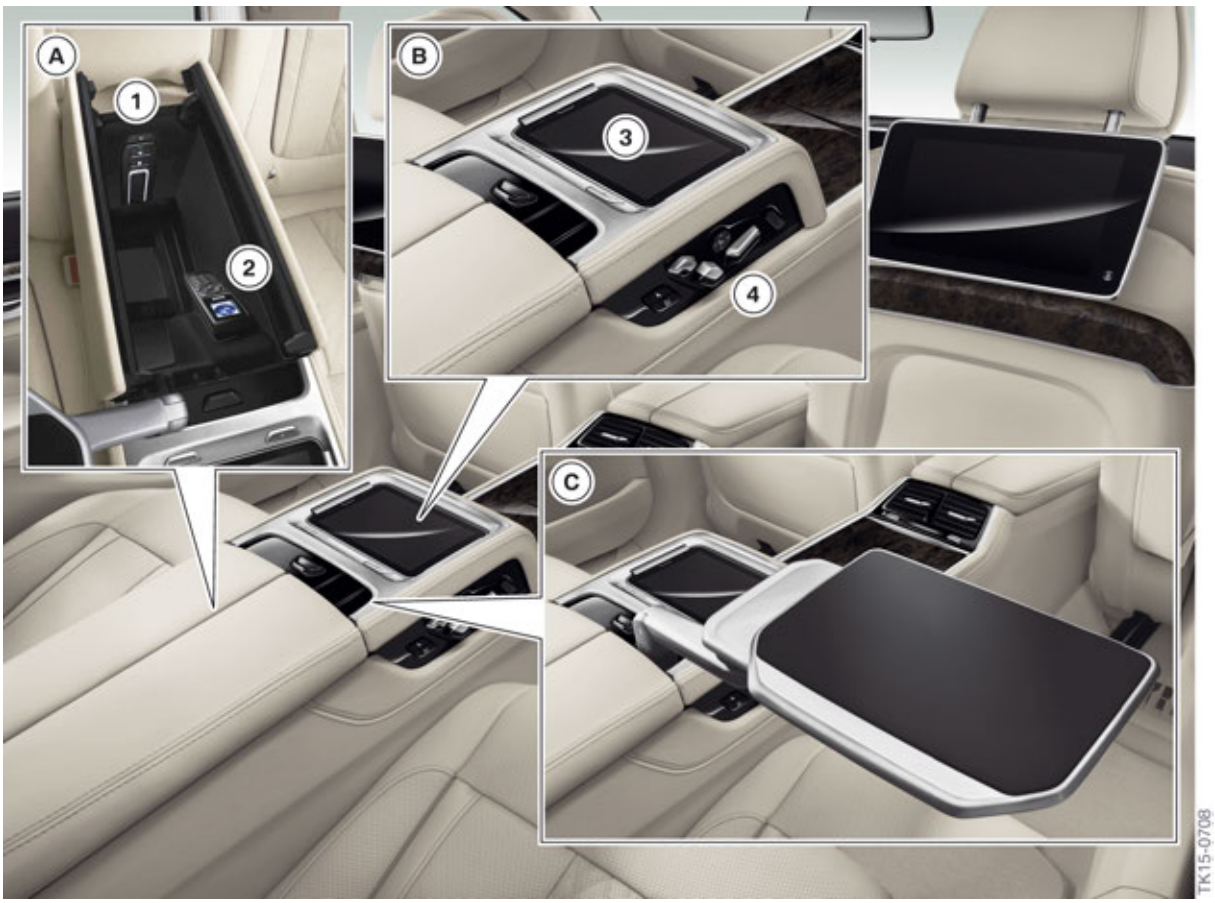

G12 Rear console

Index	Explanation
A	Storage compartment
B	Operating elements for rear console
C	Tray table on rear console
1	Market specific function
2	Market specific function
3	BMW Touch Command
4	Operating element for rear right seat adjustment

G12 Introduction
4. Interior Equipment

In the standard equipment, the G12 has a fold-down armrest in the rear seat. A stationary rear console is optionally available for the G12.

Depending on equipment, the armrest of the rear console is heated. The snap-in adapter for insertion of the SIM card as well as the handset are optionally contained in the rear console. A fold-down tray table is also installed.

The operating panels for seat adjustment are located at the side of the rear console.

4.6. Roller sunblinds

4.6.1. Roller sunblind for rear window

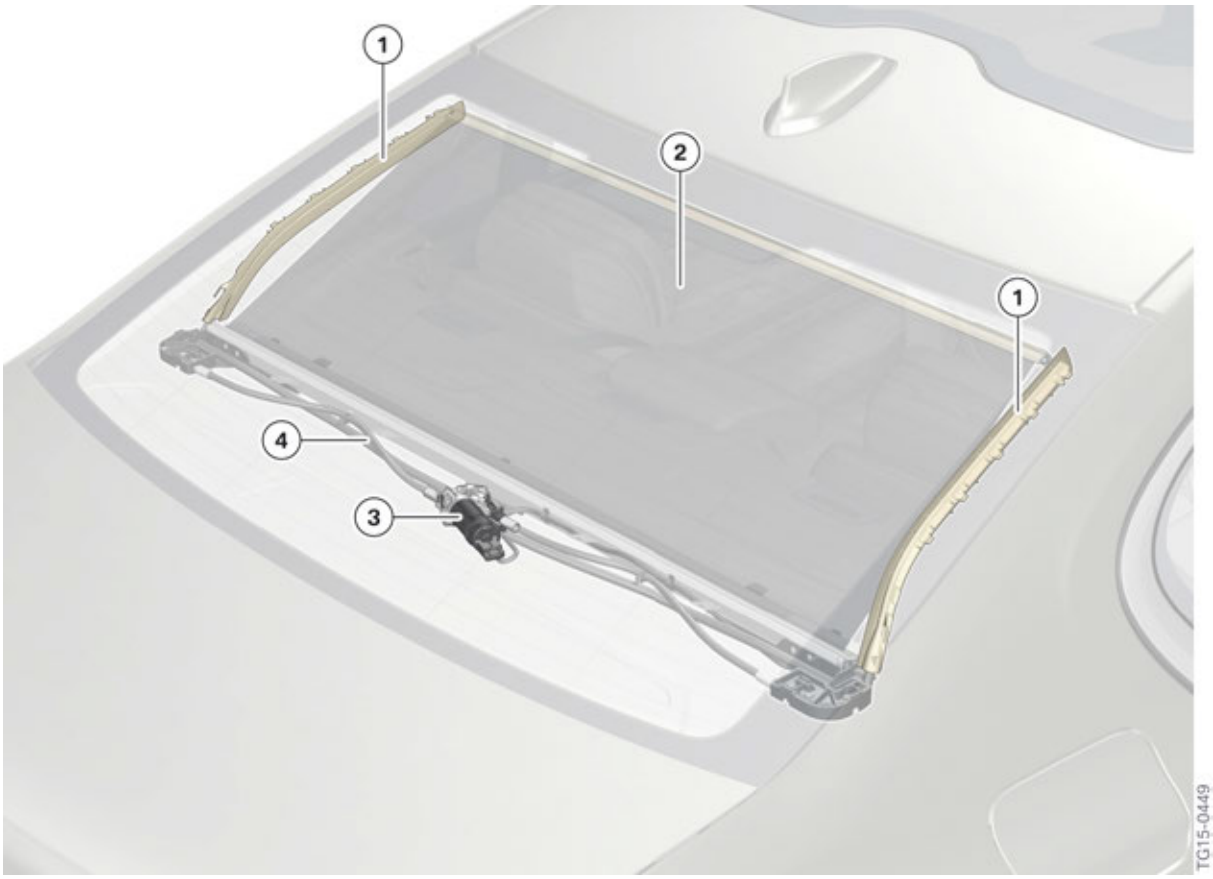

G11G12 Roller sunblind for rear window

Index	Explanation
1	Guide rails, C-pillar
2	Roller sunblind
3	Electric motor
4	Feed lines

The rear window roller sunblind (415) standard on the 750i is guided by means of side guide rails in the C-pillar trim panels. The sunblind provides maximum protection against the sun in the rear window and also improves acoustics.

The rear window roller sunblind is driven by an electric motor. The drive forces are transmitted to the cassette in the guide rails by means of cables. Operation is possible via buttons in the front and rear door trim panels and by the BMW Touch Command.

4.6.2. Roller sunblind for side window

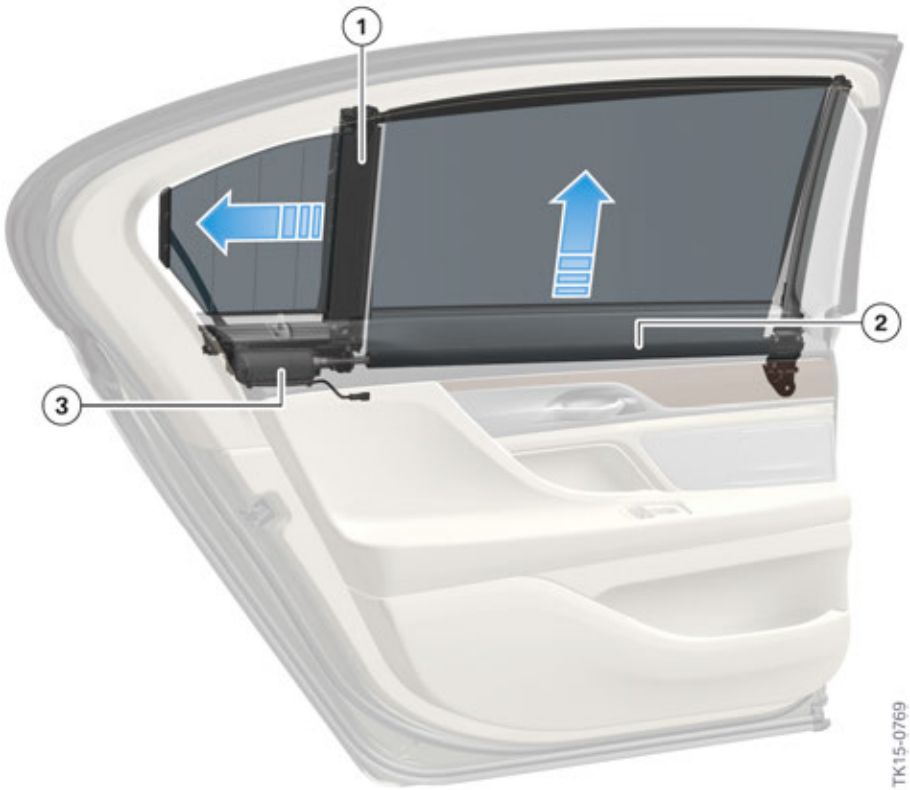

G12 Roller sunblind for side window

Index	Explanation
1	Side window roller sunblind
2	Roller sunblind for side window
3	Electric motor

The roller sunblinds for the rear side windows/side window glass (416) are offered in combination with the optional equipment rear window roller sunblind (415).

There are 2 individual roller sunblinds in each case in the rear doors for the moving side window and fixed side window glass. The roller sunblinds are driven by a common electric motor. This means that the two roller sunblinds can only be opened or closed at the same time.

The blinds are operated via buttons in the door trim panels or by the BMW Touch Command.

G12 Introduction

5. Luggage Compartment

G12 Overview of luggage compartment

Index	Explanation
1	G12 Luggage compartment with through-loading system (OE 465)
2	G12 Luggage compartment with BMW Individual coolbox (OE 791) Not for US
3	G12 Luggage compartment with compact spare wheel (OE 300)
4	G12 Luggage compartment with extended rear air conditioning (OE 4NF) Not for US

The luggage compartment dimensions of the G12 have increased slightly in comparison with the F01/F02. As a result, the luggage compartment capacity has grown from 500 l to 515 l. However, some equipment specifications result in a reduction in the luggage compartment capacity.

Bayerische Motorenwerke Aktiengesellschaft
Qualifizierung und Training
Röntgenstraße 7
85716 Unterschleißheim, Germany

Technical training.
Product information.

G12 Powertrain

Edited for the U.S. market by:
BMW Group University
Technical Training
ST1501 8/1/2015

BMW Service

General information

Symbols used

The following symbol is used in this document to facilitate better comprehension or to draw attention to very important information:

⚠

Contains important safety information and information that needs to be observed strictly in order to guarantee the smooth operation of the system.

Information status and national-market versions

BMW Group vehicles meet the requirements of the highest safety and quality standards. Changes in requirements for environmental protection, customer benefits and design render necessary continuous development of systems and components. Consequently, there may be discrepancies between the contents of this document and the vehicles available in the training course.

This document basically relates to the European version of left hand drive vehicles. Some operating elements or components are arranged differently in right-hand drive vehicles than shown in the graphics in this document. Further differences may arise as the result of the equipment specification in specific markets or countries.

Additional sources of information

Further information on the individual topics can be found in the following:

- Owner's Handbook
- Integrated Service Technical Application.

Contact: conceptinfo@bmw.de

©2015 BMW AG, Munich

Reprints of this publication or its parts require the written approval of BMW AG, Munich

The information contained in this document forms an integral part of the technical training of the BMW Group and is intended for the trainer and participants in the seminar. Refer to the latest relevant information systems of the BMW Group for any changes/additions to the technical data.

Information status: **May 2015**
BV-72/Technical Training

G12 Powertrain

Contents

1. Introduction **1**
1.1. Development code 1
1.2. History 1
1.2.1. Powertrain variants E23 1
1.2.2. Powertrain variants E32 2
1.2.3. Powertrain variants E38 3
1.2.4. Drive variants E65/E66 4
1.2.5. Drive variants F01/F02 4

2. Drive Variants **6**
2.1. Models 7
2.2. Engine designation 8

3. Gasoline Engines **9**
3.1. BMW 740i 9
3.1.1. Technical data 10
3.1.2. Highlights of the B58 engine 12
3.1.3. System wiring diagram 13
3.2. BMW 750i 15
3.2.1. Technical data 16
3.2.2. Highlights of the N63TU2 engine 18
3.2.3. System wiring diagram 19
3.3. Air intake and exhaust emission systems 21
3.3.1. Air intake duct in B58 engine 21
3.3.2. Air intake duct in N63TU2 engine 23
3.3.3. Exhaust emission system 25

4. Cooling **30**
4.1. Active air-flap control 30
4.2. System wiring diagram 32

5. Fuel Supply **34**
5.1. gasoline engine 34
5.2. System wiring diagram 36

6. Engine Electrical System **38**
6.1. Engine control unit 38
6.1.1. Nano MQS plug connections 38
6.1.2. Control unit code for Digital Motor Electronics DME 40
6.1.3. Special tools 41
6.2. Automatic engine start/stop function 42

G12 Powertrain
Contents

6.2.1. Automatic mode 44
6.2.2. Driving 44
6.2.3. Stopping 45
6.2.4. Pullaway 46
6.2.5. Automatic engine start-stop function stop on uphill gradients 47
6.2.6. Comfort concept 48
6.2.7. Start strategy 48
6.2.8. Reflex start in the event of a change in mind 50
6.2.9. Automatic engine stop at driver request 51
6.2.10. Manoeuvrability for automatic engine start-stop function coasting or stop 51
6.2.11. Switch-off inhibitors 51
6.2.12. Switch-on prompts 52
6.3. Active Sound Design (ASD) 52

7. Automatic Transmission 54
7.1. Transmission variants 54
7.2. Highlights 55
7.3. Description 55
7.4. Technical data 56
7.5. Shift matrix 57
7.6. Torque converter with centrifugal pendulum 58
7.7. Sport automatic transmission 62
7.7.1. Launch Control 62
7.7.2. Functional enhancements of the shift paddles 63
7.8. ConnectedShift 65
7.8.1. Use of the navigation data 65
7.8.2. Use of radar 66
7.8.3. Characteristics and availability 68
7.9. New functions 68
7.9.1. Transmission behavior when driving off 68
7.9.2. Stepped Sport shift mode 68
7.10. Transmission emergency release 70
7.10.1. Mechanical transmission emergency release 70
7.10.2. Electronic transmission emergency release 71
7.11. Towing 73
7.12. System wiring diagram 75

8. Four-Wheel Drive 77
8.1. Overview of all-wheel drive systems 77
8.2. New features in xDrive 80

G12 Powertrain

Contents

8.3. Functional description of xDrive 82
8.4. Efficiency Mode 84
8.4.1. Oil stop 86
8.4.2. Oil reservoir 87
8.5. Operating strategy 88
8.5.1. Determination of the wheel slip 90
8.6. Notes for Service 93
8.6.1. Oil change for transfer box 95
8.6.2. Classification of the transfer box 95
8.7. System wiring diagram 97

9. Drive Shafts and Differential 99
9.1. Four-wheel drive 99
9.1.1. xDrive drive shaft 99
9.1.2. xDrive front axle differential 100
9.1.3. Front output shafts of xDrive 101
9.2. Rear-wheel drive 102
9.2.1. Drive shafts 102
9.2.2. Rear axle final drive 103
9.2.3. Rear output shafts 104

G12 Powertrain

1. Introduction

This training reference manual contains information about the different engine and transmission variants of the new BMW 7 Series. The training reference manual also covers the special features relating to fuel preparation and the drive train.

The content of this training reference manual builds on the knowledge from the reference information for the different engines. This document does not deal with the fundamental technical functions of the engines.

1.1. Development code

The new BMW 7 Series G12 will be launched on the market from October 2015. Apart from the different body versions, there are no technical distinguishing features in the drive area.

1.2. History

The following table provides an overview of the different BMW 7 Series models of the past years.

Not all models were available for the US.

1.2.1. Powertrain variants E23

TA14-1658

BMW 7 Series E23

G12 Powertrain
1. Introduction

Production period 1977 - 1979

Models	Engine code	Design	Displacement in cm³	Power in kW (HP)	Torque in Nm
728	M30B28	R6	2788	125 (170) at 5800 rpm	238 at 4000 rpm
730	M30B30	R6	2985	135 (184) at 5800 rpm	260 at 3500 rpm
733i	M30B32	R6	3205	145 (197) at 5500 rpm	280 at 4300 rpm

Production period 1979 - 1986

Models	Engine code	Design	Displacement in cm³	Power in kW (HP)	Torque in Nm
725i	M30B25	R6	2494	110 (150) at 5500 rpm	215 at 4000 rpm
728i	M30B28	R6	2788	135 (184) at 5800 rpm	240 at 4200 rpm
732i	M30B32	R6	3210	145 (197) at 5500 rpm	285 at 4300 rpm
735i	M30B34	R6	3430	160 (218) at 5200 rpm	310 at 4000 rpm
745i*	M30B32	R6	3210	185 (252) at 5200 rpm	380 at 2600 rpm
745i*	M30B34	R6	3430	185 (252) at 4900 rpm	380 at 2200 rpm

*Turbocharged engine.

1.2.2. Powertrain variants E32

BMW 7 Series E32

G12 Powertrain

1. Introduction

Production period 1986 - 1994

Models	Engine code	Design	Displacement in cm³	Power in kW (HP)	Torque in Nm
735i	M30B35	R6	3430	155 (211) at 5700 rpm	305 at 4000 rpm
740i/iL	M60B40	V8	3982	210 (286) at 5800 rpm	400 at 4500 rpm
750i/iL	M70B50	V12	4988	220 (300) at 5200 rpm	450 at 4100 rpm

1.2.3. Powertrain variants E38

BMW 7 Series E38

Production period 1994 - 2001

Models	Engine code	Design	Displacement in cm³	Power in kW (HP)	Torque in Nm
740i/iL	M60B40	V8	3982	210 (286) at 5800 rpm	400 at 4500 rpm
740i/iL	M62B44	V8	4398	210 (286) at 5400 rpm	420 at 3900 rpm
740i/iL	M62B44	V8	4398	210 (286) at 5400 rpm	440 at 3600 rpm
750i/iL	M73B54	V12	5379	240 (326) at 5000 rpm	490 at 3900 rpm
740d	M67D40	V8	3901	180 (245) at 4000 rpm	560 from 1750 rpm

G12 Powertrain
1. Introduction

1.2.4. Drive variants E65/E66

BMW 7 Series E65

Production period 2001 - 2008

Models	Engine code	Design	Displacement in cm³	Power in kW (HP)	Torque in Nm
745i/iL	N62B44	V8	4398	245 (333) at 6100 rpm	450 at 3600 rpm
750i/iL	N62B48O1	V8	4799	270 (367) at 6300 rpm	490 at 3400 rpm
760i/iL	N73B60	V12	5972	327 (445) at 6000 rpm	600 at 3950 rpm

1.2.5. Drive variants F01/F02

BMW 7 Series F01

G12 Powertrain

1. Introduction

Production period since 2008

Models	Engine code	Design	Displacement in cm³	Power in kW (HP)	Torque in Nm
740i/Li	N54B30O0	R6	2979	240 (326) at 5800 rpm	450 from 1500 rpm
740i/Li (xDrive)	N55B30O0	R6	2979	235 (320) at 5800 rpm	450 from 1300 rpm
750i/Li (xDrive)	N63B44O0	V8	4395	300 (407) from 5500 rpm	600 from 1750 rpm
750i/Li (xDrive)	N63B44O1	V8	4395	330 (450) from 5500 rpm	650 from 2000 rpm
760i/Li	N74B60U0	V12	5972	400 (544) from 5250 rpm	750 from 1500 rpm
740d (xDrive)	N57D30T0	R6	2993	225 (306) at 4400 rpm	600 from 1500 rpm

G12 Powertrain
2. Drive Variants

Like the predecessor, the G12 is also optionally available with all-wheel drive. For the market introduction, it is possible to choose between 6 and 8-cylinder engines. Further engines will follow at a later date.

The 6-cylinder engine is a newly developed gasoline engine of the modular family (B-engines) which have their series introduction in the F30 LCI and G12.

The 8-cylinder gasoline engine N63TU2 has also been revamped for the second time and also has its series introduction in the G12.

All engines comply with the exhaust emission standard ULEV II. Lower exhaust emission standards.

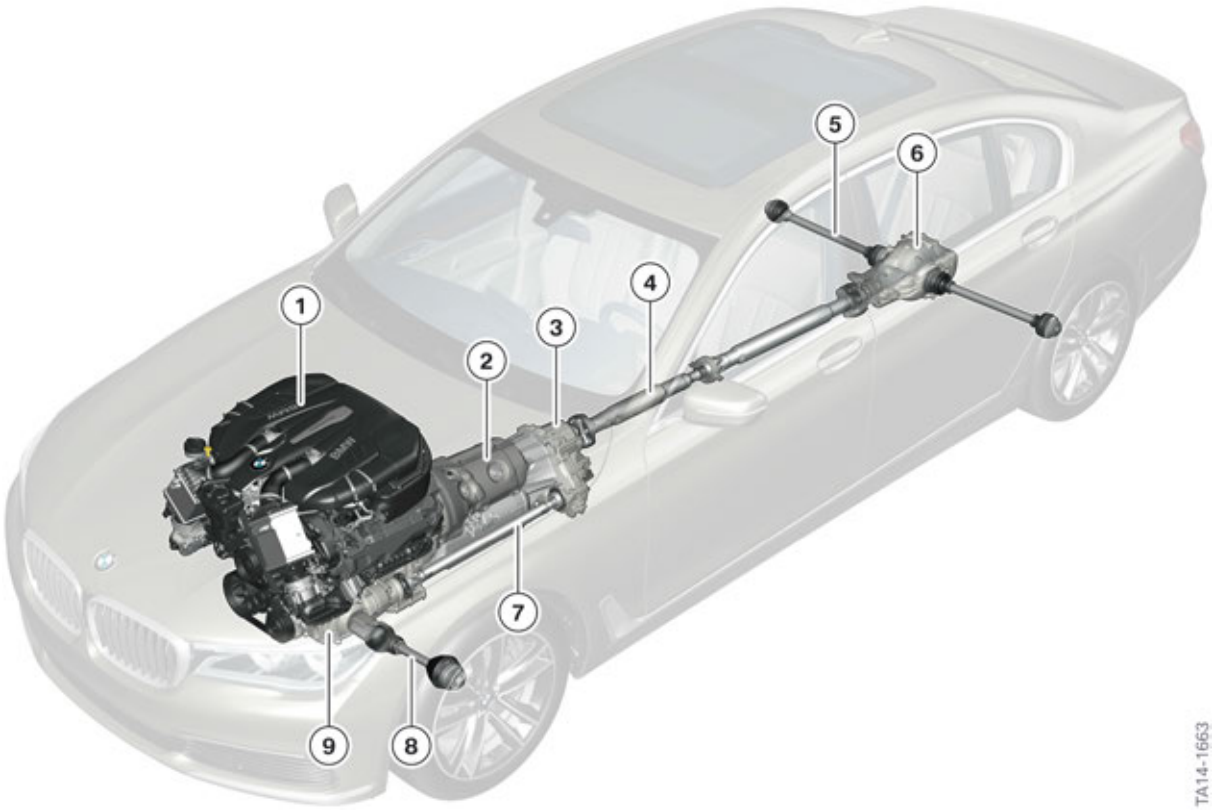

Overview of drive in G12

Index	Explanation
1	Engine
2	Automatic transmission
3	Transfer box VTG (only for xDrive)
4	Drive shaft
5	Output shaft, rear

G12 Powertrain

2. Drive Variants

Index	Explanation
6	Rear axle differential
7	Drive shaft (only for xDrive)
8	Front output shaft (only for xDrive)
9	Front axle differential (only for xDrive)

2.1. Models

The following model variants are available for the market introduction of the G12.

G12	Drive	Transmission
740i	6-cylinder gasoline engine	8HPTU automatic transmission
750i	8-cylinder gasoline engine	8HPTU automatic transmission
750i xDrive	8-cylinder gasoline engine	8HPTU automatic transmission

G12 Powertrain
2. Drive Variants

2.2. Engine designation

The following table provides an overview of the composition of the different engine codes.

Position	Meaning	Index	Explanation
1	Engine developer	M, N, B P S W	BMW Group BMW M Sport BMW M GmbH Bought-in engines
2	Engine type	3 4 5 6 7	3-cylinder in-line engine (e.g. B38) 4-cylinder in-line engine (e.g. B48) 6-cylinder in-line engine (e.g. B58) V8 engine (e.g. N63) V12 engine (e.g. N74)
3	Change to the basic engine concept	0 1 – 9	Basic engine Changes, e.g. combustion process
4	Working method or fuel type and possibly installation position	A B C D H K	gasoline, transverse mounted gasoline, longitudinally mounted Diesel, transverse mounted Diesel, longitudinally mounted Hydrogen gasoline, horizontal mounting
5 + 6	Displacement in 1/10 liter	12 15 20 30 40 44 60	1,2 l 1.5 L 2.0 L 3,0 L 4,0 L 4,4 L 6,0 L
7	Performance class	K U M O T S	Lowest Lower Middle Upper Top Super
8	Revision relevant to approval	0 1 – 9	New development Redesign

G12 Powertrain

3. Gasoline Engines

The B58 and N63TU2 engines are installed in the new G12. The following table provides information on the different variants.

Models	Engine code	Design	Displacement in cm³	Power in kW (HP)	Torque in Nm (lb-ft)
740i	B58B30M0	R6	2998	240 (320) from 5500 rpm	450 (330) from 1380 rpm
750i (xDrive)	N63B44O2	V8	4395	330 (445) from 5500 rpm	650 (480) from 1380 rpm

3.1. BMW 740i

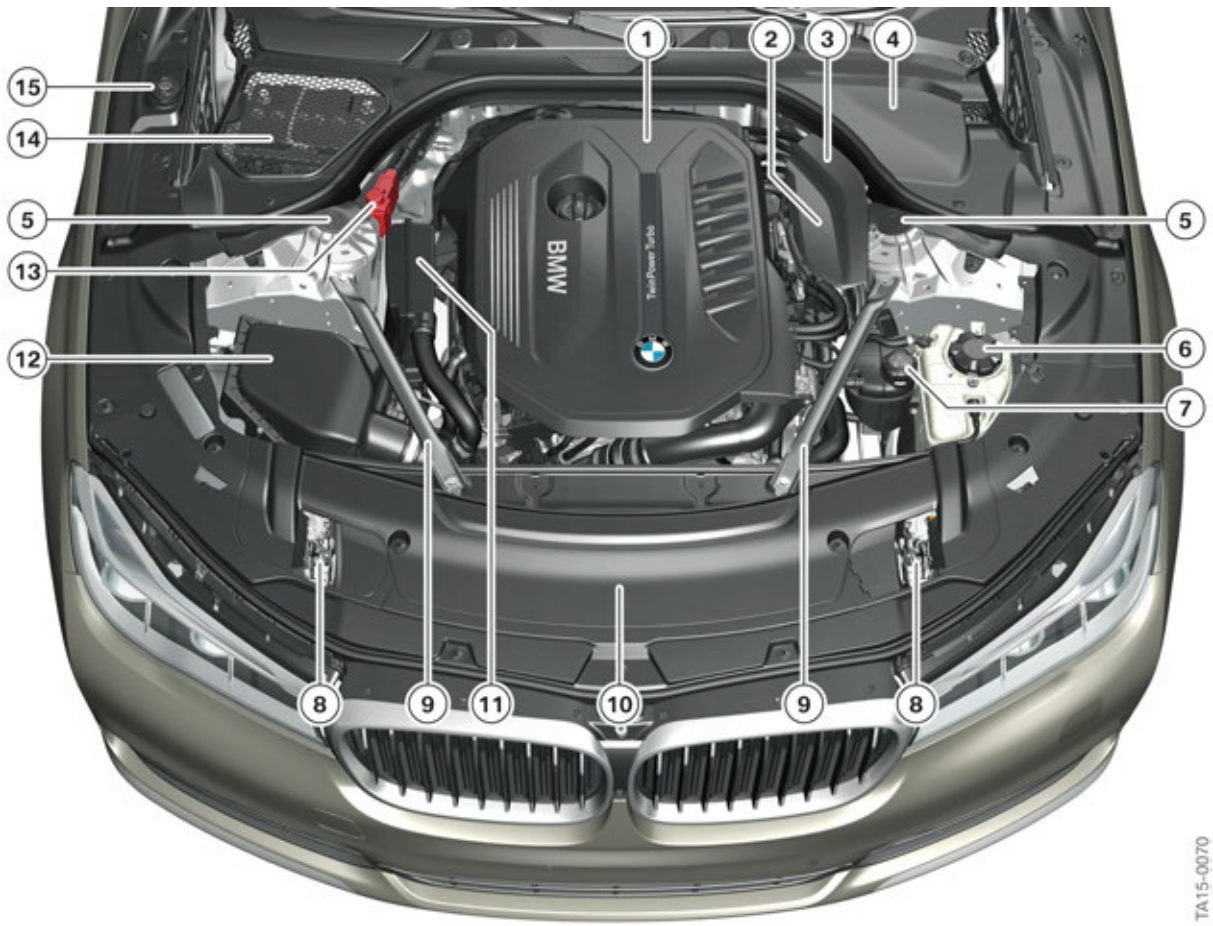

Overview of engine compartment of B58 engine in the G12

Index	Explanation
1	Engine design cover
2	Integrated supply module
3	Digital Motor Electronics (DME)
4	Cowl panel cover

Index	Explanation
5	Front axle support bearing
6	Expansion tank for the high-temperature coolant circuit
7	Expansion tank for the low-temperature coolant circuit
8	Two-lock system
9	Front strut braces
10	Cover for cooling package
11	Resonator
12	Intake silencer
13	Jump start terminal point
14	12 V battery (vehicle electrical system support)
15	Filler neck for washer fluid reservoir

3.1.1. Technical data

Technical data	Unit/standard	B58B30M0
Operating mode		TVDI*
Firing order		1-5-3-6-2-4
Bore	mm	82
Stroke	mm	94,6
Compression ratio	[ε]	11:1
Permitted fuel	RON	91-100
Digital Motor Electronics		DME 8.6
Emission standards	ULEV II	6

*TVDI:

1 T = Turbo
2 V = Valvetronic
3 D = Direct
4 I = Injection.

G12 Powertrain

3. Gasoline Engines

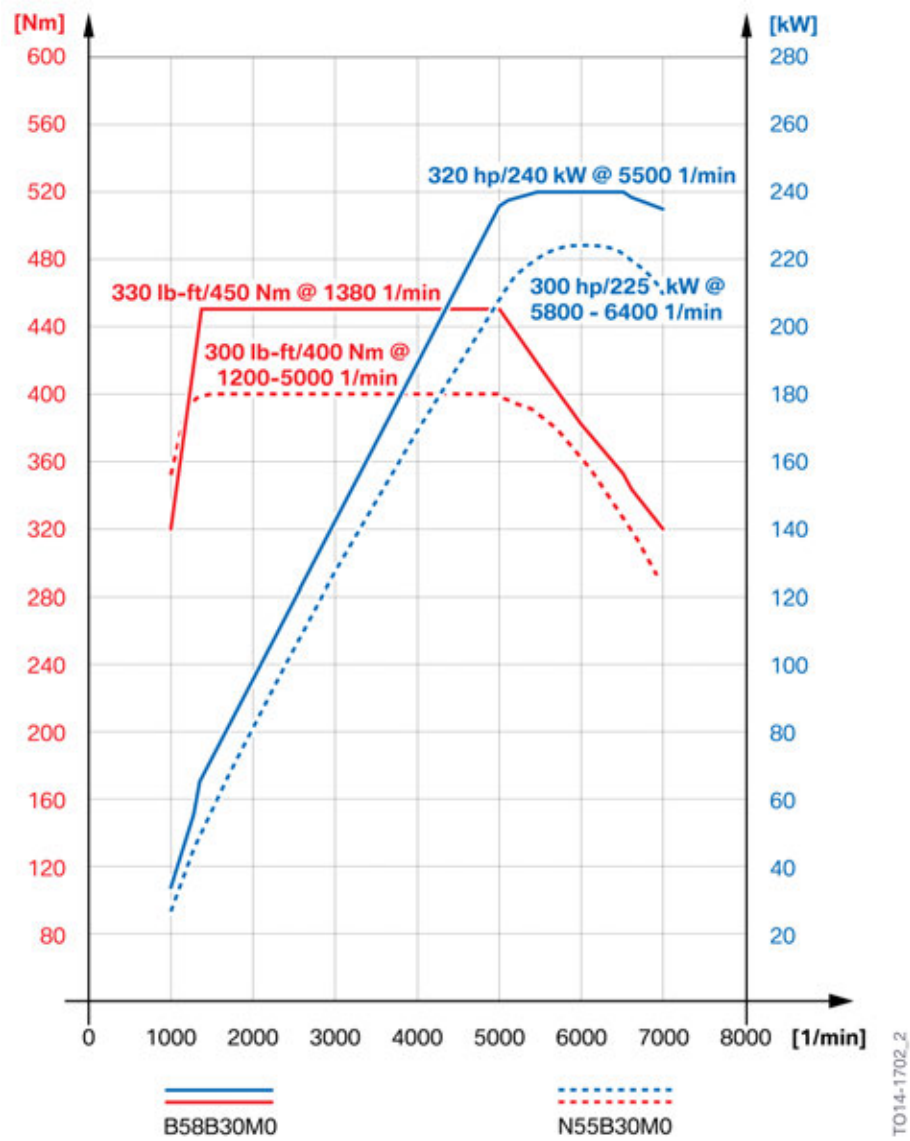

Full-load diagram for B58B30M0

G12 Powertrain
3. Gasoline Engines

3.1.2. Highlights of the B58 engine

B58 engine

1 Valvetronic 4th generation
2 Heat management module
3 Intake air system with integrated charge air cooler
4 Twin-scroll turbocharger with electrical wastegate valve controller
5 New Digital Motor Electronics (DME) 8.6

Further information on the B58B30M0 engine is provided in the Technical Training Manual “ST1505 B58 Engine”.

G12 Powertrain

3. Gasoline Engines

3.1.3. System wiring diagram

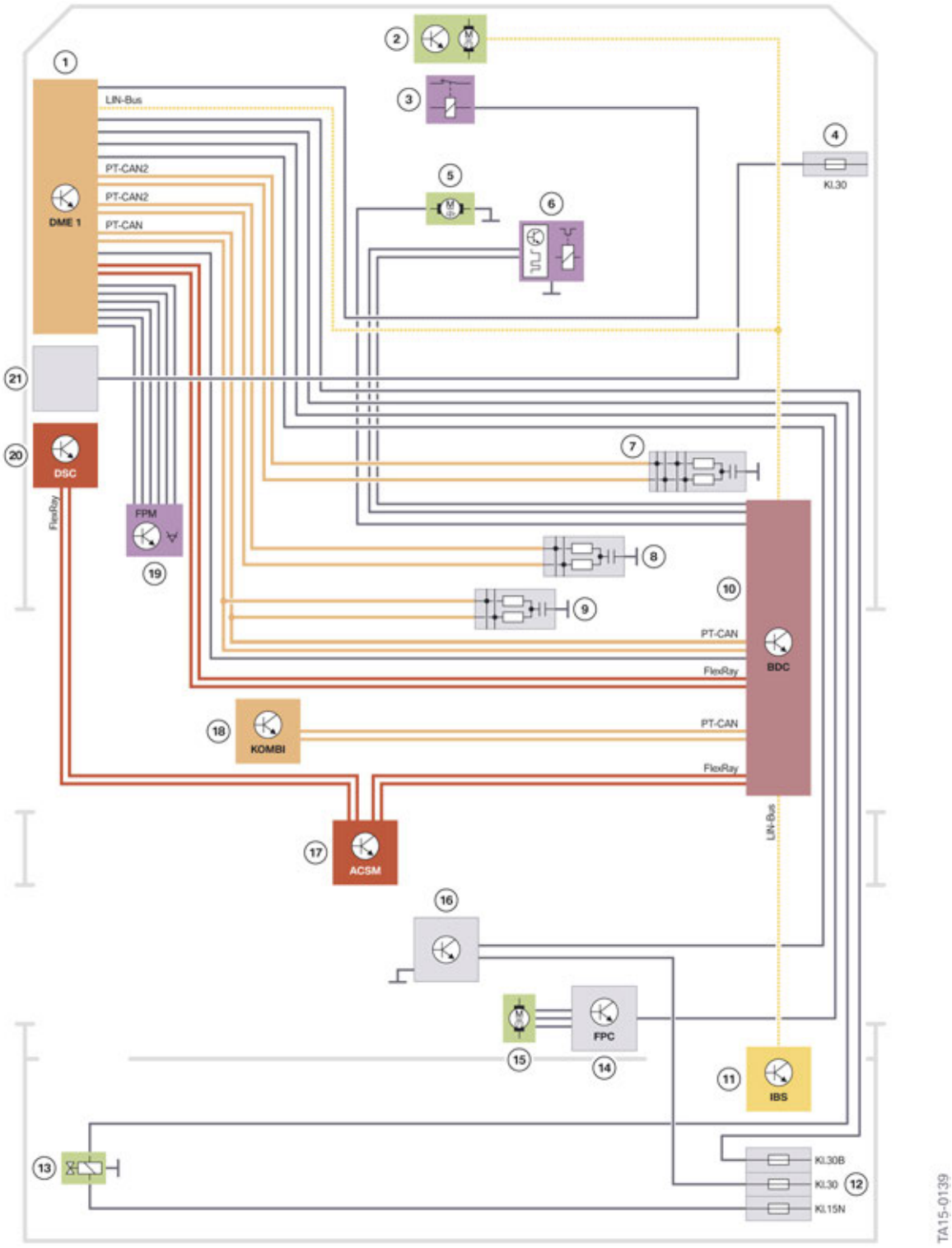

System wiring diagram of B58 engine in the G12

G12 Powertrain
3. Gasoline Engines

Index	Explanation
1	Digital Motor Electronics (DME)
2	Electric fan
3	Relay for electric fan
4	Power distribution box, engine compartment
5	Pinion starter
6	Air conditioning compressor
7	CAN terminator 6
8	CAN terminator 5
9	CAN terminator 4
10	Body Domain Controller (BDC)
11	Intelligent Battery Sensor (IBS)
12	Rear right power distribution box
13	Electrical exhaust flap
14	Fuel pump control (FPC)
15	Tank leak diagnosis (Natural Vacuum Leak Detection NVLD)
16	Crash Safety Module (ACSM)
17	Instrument panel (KOMBI)
18	Integrated supply module, accelerator pedal module (FPM)
19	Dynamic Stability Control (DSC)
20	Integrated supply module
21	Rear power distribution box

G12 Powertrain

3. Gasoline Engines

3.2. BMW 750i

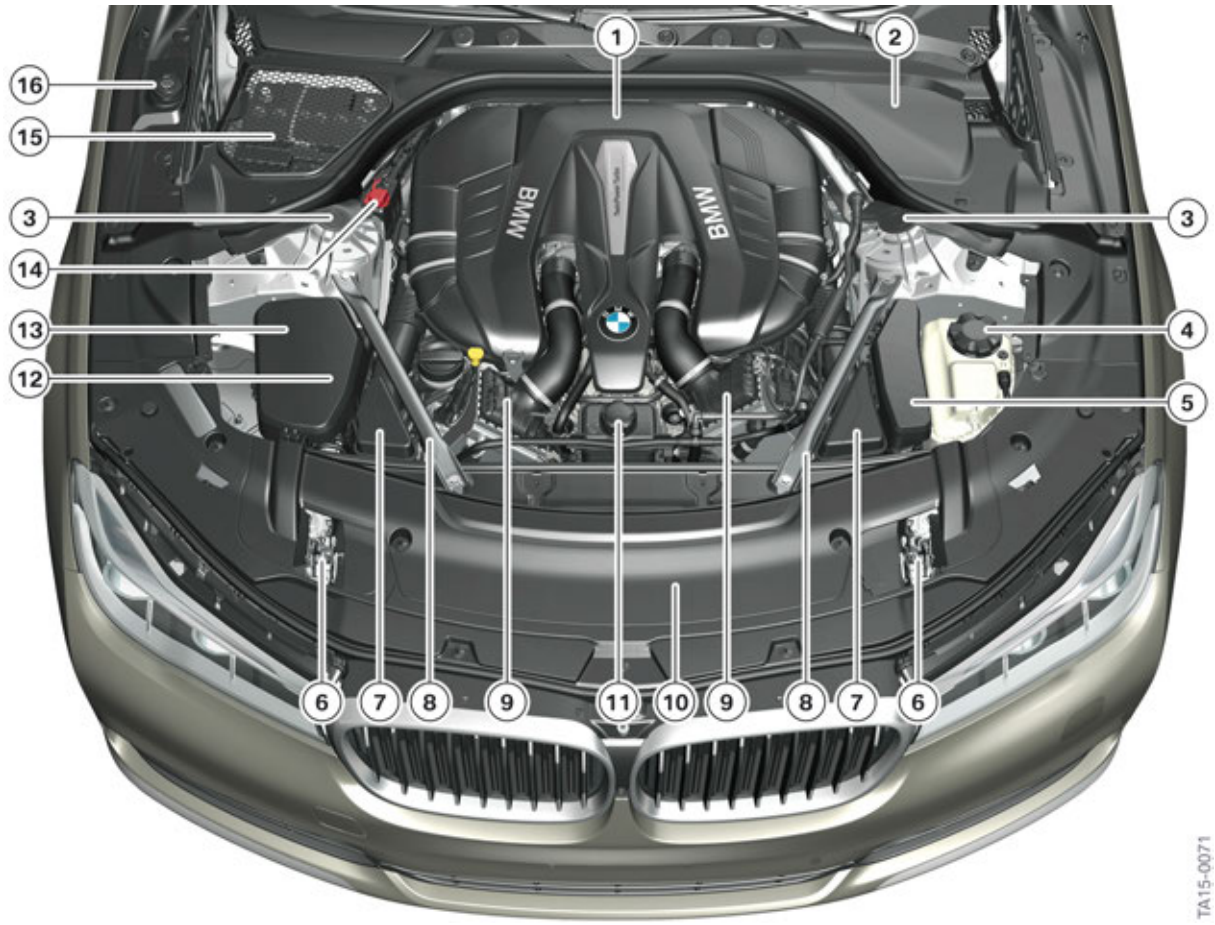

Overview of engine compartment of N63TU2 engine in the G12

Index	Explanation
1	Engine design cover
2	Cowl panel cover
3	Front axle support bearing
4	Expansion tank for the high-temperature coolant circuit
5	Digital Motor Electronics (DME) I
6	Two-lock system
7	Resonator
8	Front strut braces
9	Indirect charge air cooler
10	Cover for cooling package
11	Expansion tank for the low-temperature coolant circuit
12	Integrated supply module

Index	Explanation
13	Digital Motor Electronics (DME) II
14	Jump start terminal point
15	12 V battery (vehicle electrical system support)
16	Filler neck for washer fluid reservoir

3.2.1. Technical data

*TVDI:

1 T = Turbo
2 V = Valvetronic
3 D = Direct
4 I = Injection.

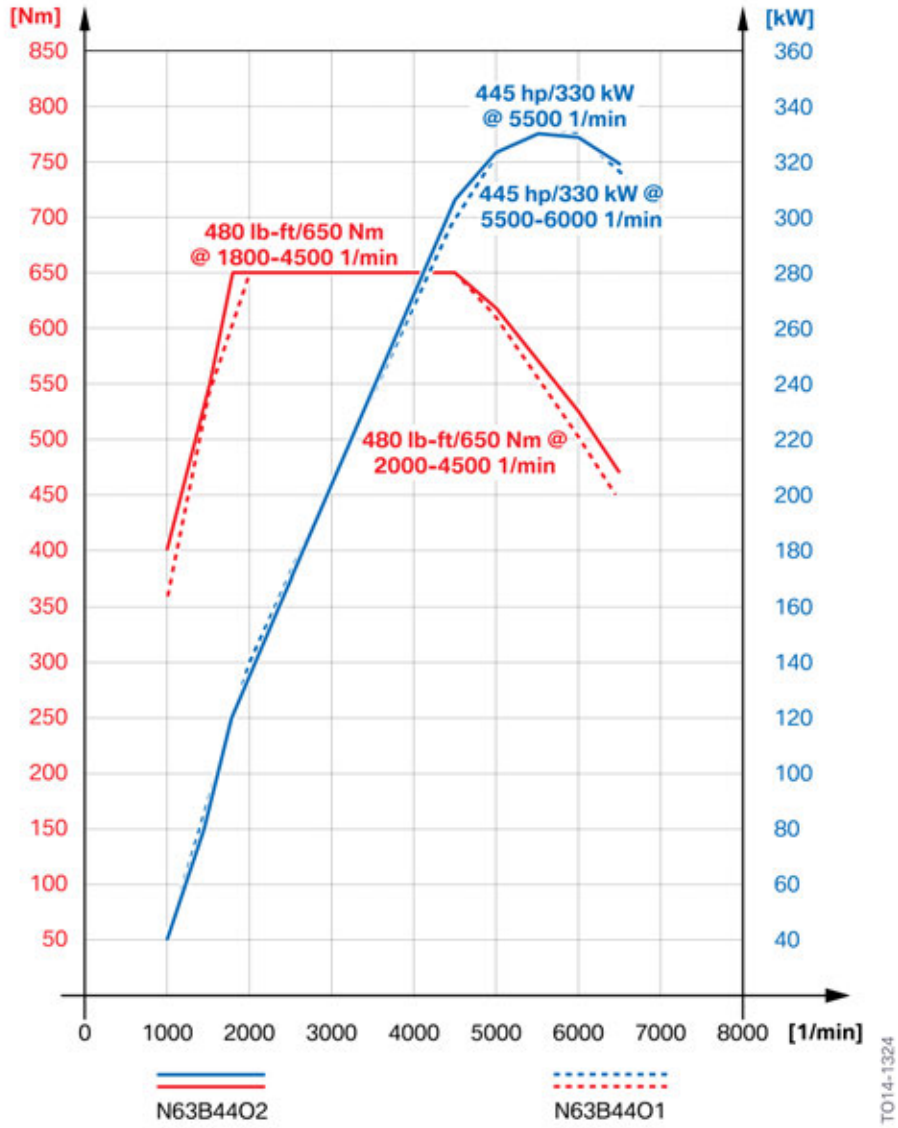

Full load diagram N63B44O2 engine

3.2.2. Highlights of the N63TU2 engine

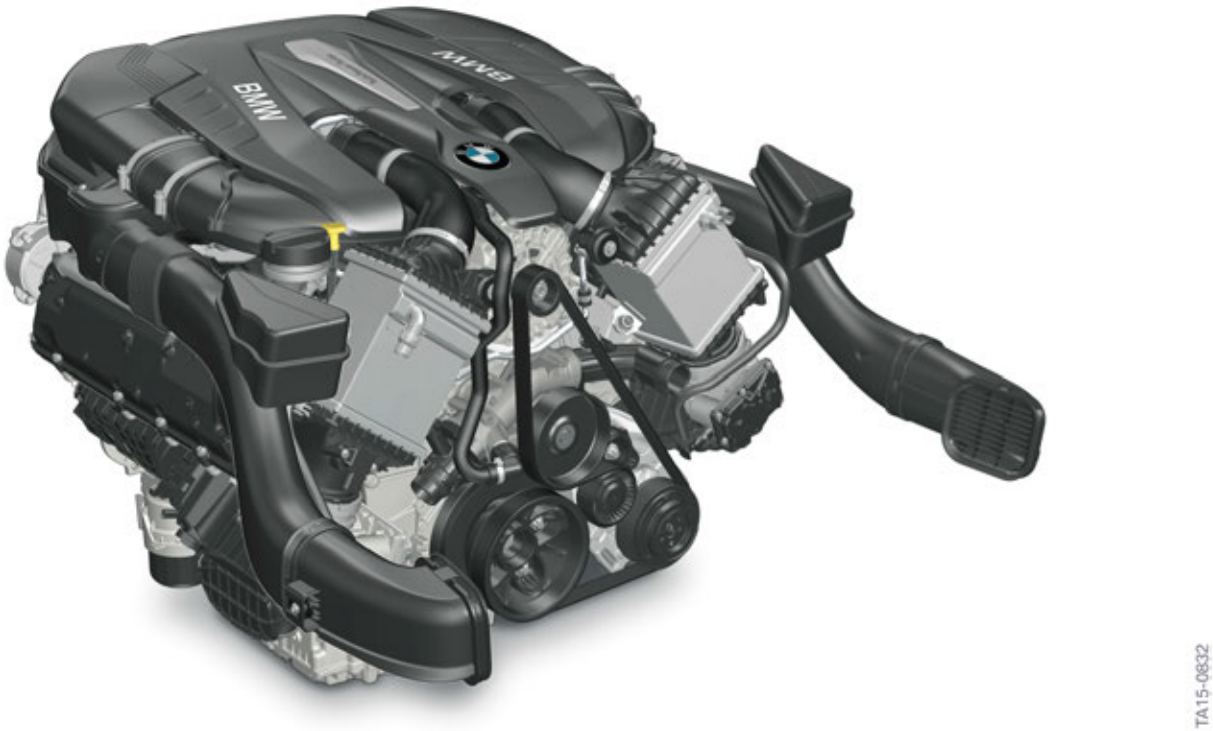

N63TU2 engine

1 Map-controlled oil pump

2 Twin-scroll turbocharger with electrical wastegate valve controller

3 Engine temperature management Split-Cooling-Combined cooling system (SCC)

4 Engine oil /coolant heat exchanger integrated in the V-space

5 New coolant-cooled Digital Motor Electronics (DME) 8.8

Further information on the N63B44O2 engine is provided in the Technical Training Manual “ST1511 N63TU2 Engine”.

G12 Powertrain

3. Gasoline Engines

3.2.3. System wiring diagram

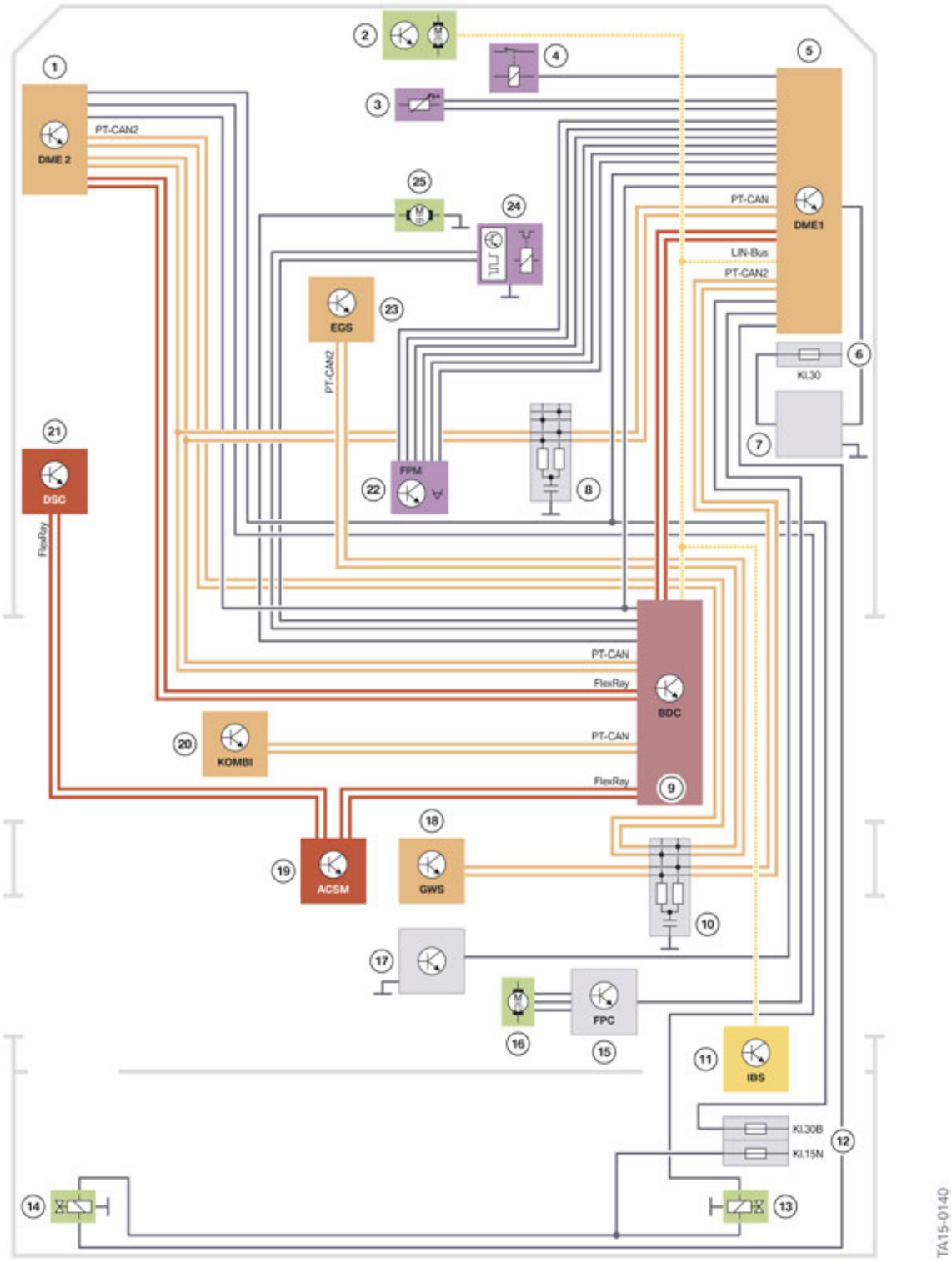

System wiring diagram of N63TU2 engine in the G12

G12 Powertrain
3. Gasoline Engines

Index	Explanation
1	Digital Motor Electronics (DME) II
2	Electric fan
3	Temperature sensor
4	Relay for electric fan
5	Digital Motor Electronics (DME) I
6	Power distribution box, engine compartment
7	Integrated supply module
8	CAN terminator 4
9	Body Domain Controller (BDC)
10	CAN terminator 5
11	Intelligent Battery Sensor (IBS)
12	Rear right power distribution box
13	Electrical exhaust flap, right
14	Electrical exhaust flap, left
15	Fuel pump control (FPC)
16	Electric fuel pump
17	Tank leak diagnosis (Natural Vacuum Leak Detection NVLD)
18	Gear selector switch (GWS)
19	Crash Safety Module (ASCM)
20	Instrument panel (KOMBI)
21	Dynamic Stability Control (DSC)
22	Accelerator pedal module
23	Electronic transmission control (EGS)
24	Air conditioning compressor
25	Pinion starter

G12 Powertrain
3. Gasoline Engines

3.3. Air intake and exhaust emission systems

3.3.1. Air intake duct in B58 engine

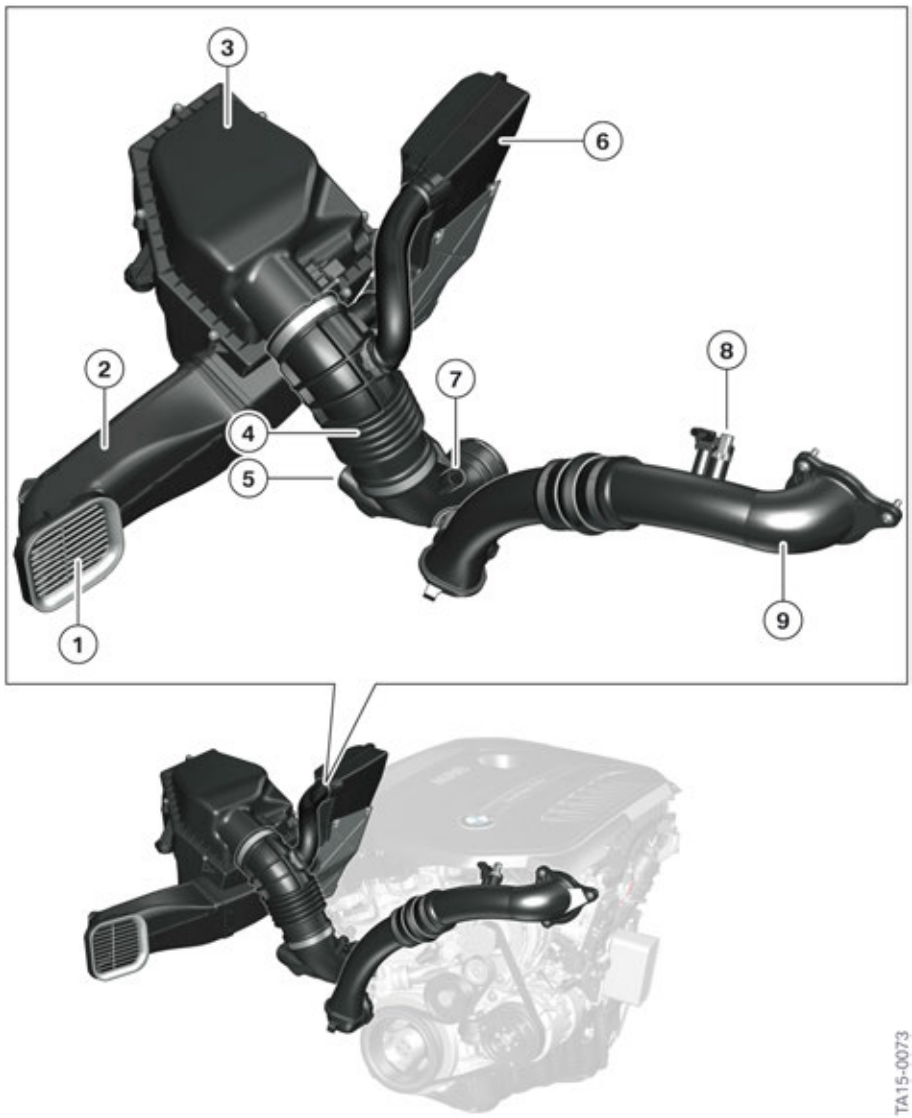

Air intake duct of B58 engine in the G12

Index	Explanation
1	Unfiltered air intake with grille
2	Two-branch air intake duct
3	Intake silencer
4	Clean air pipe
5	Broadband silencer

Index	Explanation
6	Resonator
7	Connection for blow-by gas line
8	Combined charging pressure and temperature sensor
9	Charge air hose downstream of charge air cooler

Resonator

The pulsating air flow of the rotating engine is damped in the air intake duct by using resonators. The B58 engine of the G12 has a total of 2 resonators.

Broadband silencer

If a blow-off valve is no longer used on turbo engines, a transient high-frequency noise occurs when the engine load is reduced. This is caused by the turbocharger pressure on the intake side. Broadband silencers are matched to this to a frequency of approximately 3 kHz to eliminate it.

3.3.2. Air intake duct in N63TU2 engine

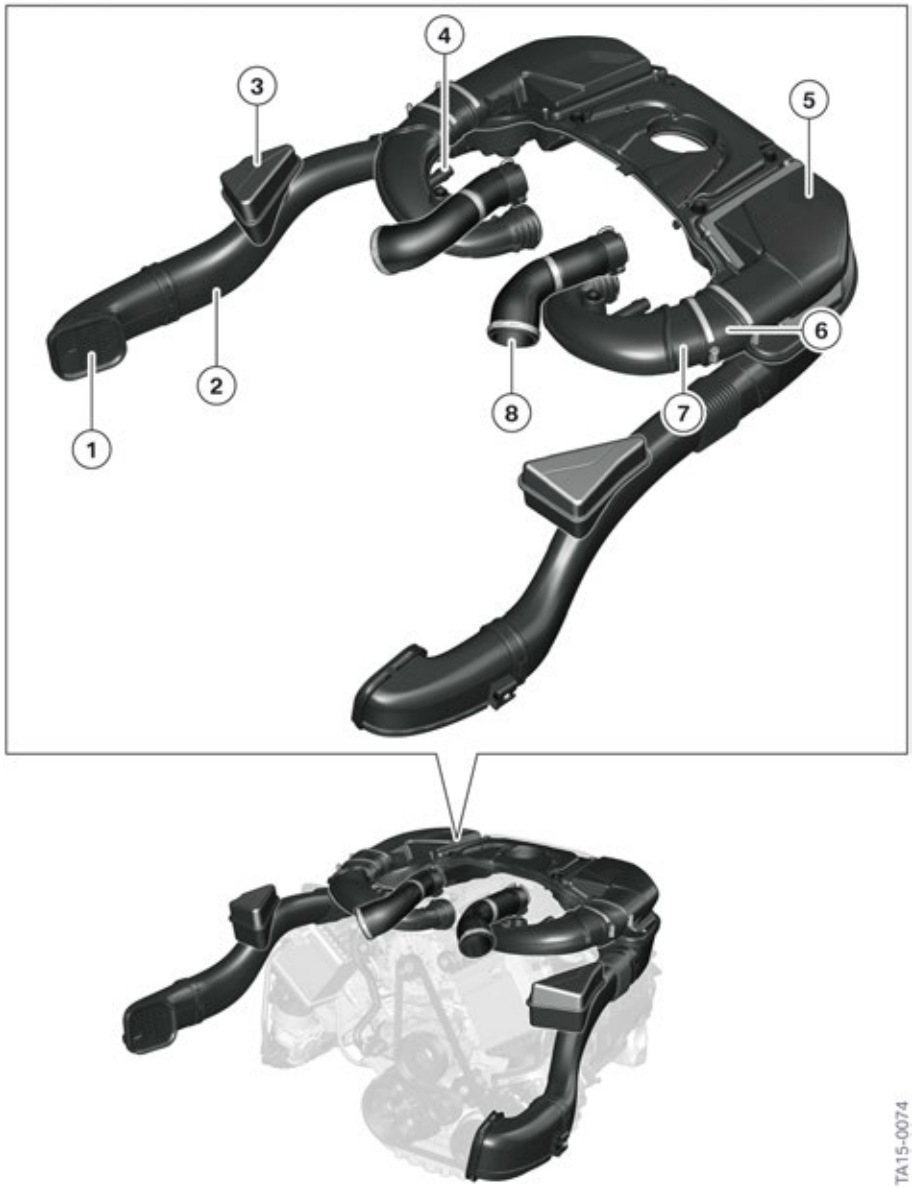

Air intake duct of N63TU2 engine in the G12

Index	Explanation
1	Unfiltered air intake with grille
2	Unfiltered air pipe
3	Resonator
4	Connection for blow-by gas line

Index	Explanation
5	Intake silencer (left and right)
6	Clean air gaiter
7	Clean air pipe
8	Charge air hose downstream of charge air cooler

The 8-cylinder gasoline engine has a two-branch intake system. This ensures that the necessary air volume is made available to the engine in every load range.

3.3.3. Exhaust emission system

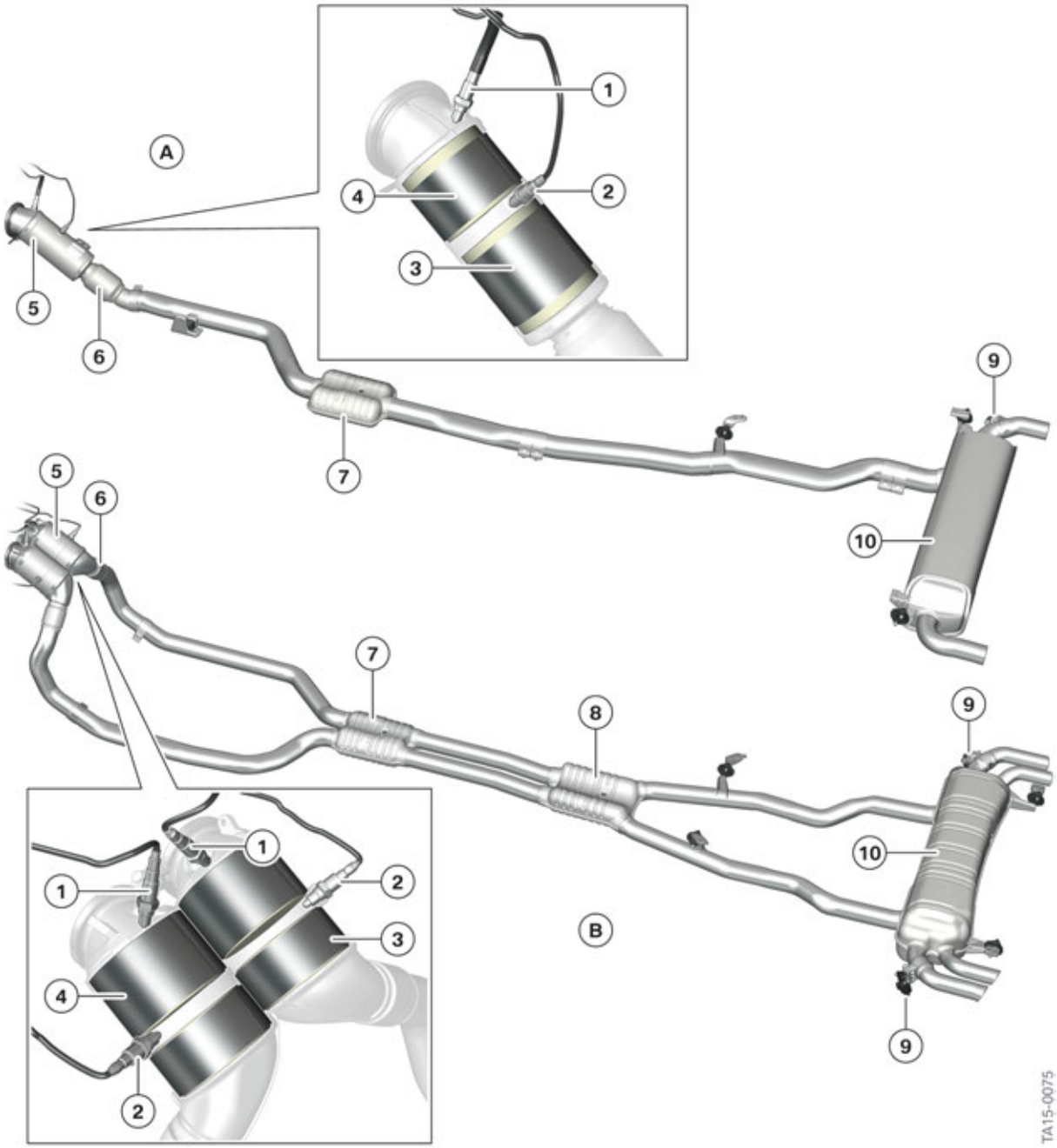

Exhaust emission system of gasoline engine in the G12

Index	Explanation
A	B58 engine (single-branch)
B	N63TU2 engine (two-branch)
1	Control sensor (broadband oxygen sensor LSU ADV)
2	Monitoring sensor (voltage jump oxygen sensor LSF xFour)
3	Monolith 1
4	Monolith 2
5	3-way catalytic converter
6	End coupling element
7	Front silencer
8	Center silencer
9	Electrically activated exhaust flap
10	Rear silencer

Special features of the exhaust emission system:

- Optimum design of the exhaust system with respect to the conflict of goals between exhaust gas counterpressure and acoustics.
- Design of the silencers corresponds to the high comfort standards of the G12.
- Electrical exhaust flap(s) for acoustics with high load feedback and powerful sound upon acceleration.
- Consistent lightweight construction through bracket design, resulting in reduced number of attachment points.

Technical data of the exhaust emission system

Exhaust emission system	B58 engine	N63TU2 engine
3-way catalytic converter	2-monolith system	2-monolith system
Cell density of monolith 1*	600	600
Cell density of monolith 2	400	400
Volume of front silencer	5 L	5 L
Volume of middle silencer	—	5 L
Volume of rear silencer	35 L	38 L
Number of electrically activated exhaust flaps	1	2
Number of exhaust tailpipes	2	4
Tailpipe trims	Integrated in the body	Integrated in the body

Electrically activated exhaust flap

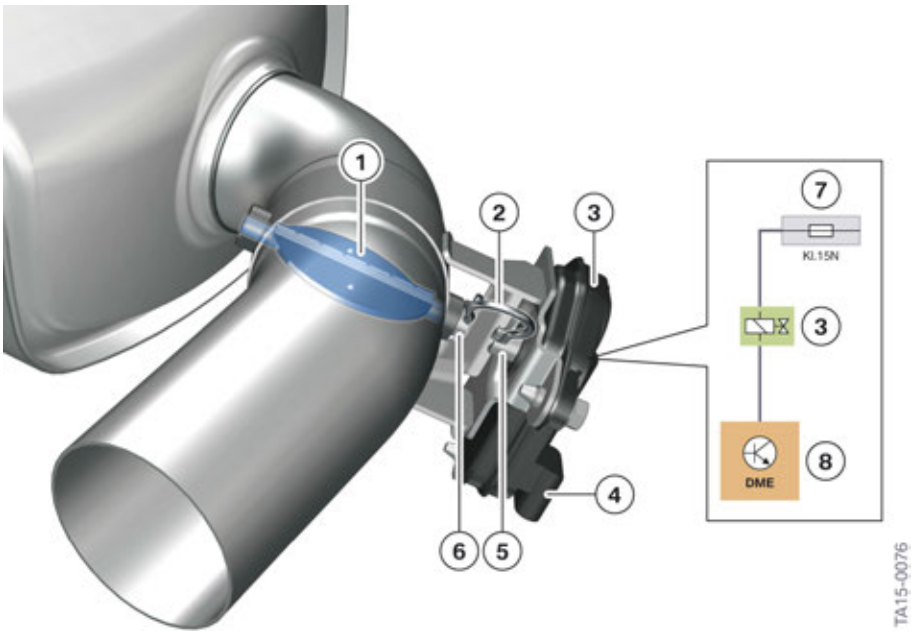

Electrically activated exhaust flap on B58 engine in the G12

Index	Explanation
1	Exhaust flap
2	Spring
3	Electrical exhaust flap actuator
4	Electrical connection (4-pin)
5	Drive pin
6	Output pin
7	Fuse, rear right power distribution box
8	Digital Motor Electronics (DME)

The exhaust flap is integrated in the rear silencer. The exhaust flap is driven via an electric motor with integrated transmission and electronics. The actuator of the electrically adjustable exhaust flap has the following electrical connections:

- Voltage supply (+)
- Ground (-)
- Actuating wire (PWM signal line)

At low engine speed and low load, the exhaust flap allows the noise level to be significantly reduced by closing the exhaust flap. At high engine speed and high load, the exhaust gas counterpressure can be reduced by opening the exhaust flap.

The exhaust flap is activated by the Digital Motor Electronics (DME) by means of a pulse-width-modulated signal. The input variables are:

- Engine speed
- Load
- Driving speed

The exhaust flap cannot travel to an intermediate position and is either completely open or closed. The flap is moved to the respective mechanical end stops by means of pulse-width modulated signals (PWM signals). The preferred position is the open position in the event of detected faults or loss of activation or after the engine is switched off.

Electrical exhaust flap	B58	N63TU2
Installation location	right	right and left
Pulse-width modulated signal open	10 % duty cycle	10 % duty cycle
Pulse-width modulated signal closed	90 % duty cycle	90 % duty cycle

The actuator of the electrical exhaust flap can be replaced separately. The actuator can be moved to an installation position using the BMW diagnosis system ISTA.

The exact position of the exhaust flap is stored in a characteristic map in the Digital Motor Electronics. The following table provides only an approximate overview of the different conditions of the exhaust flap.

Engine operating points	Exhaust flap open	Exhaust flap closed
Idling		X
Low load		X
Coasting (overrun) mode		X
Constant-speed driving with partial load		X
Acceleration with high load	X	
Full load	X	

Please note that the right flap on the B58 engine and the outer exhaust flaps on the N63TU2 engine are closed at idle. For this reason, no emission measurement can be performed at these tailpipes.

Tailpipe versions

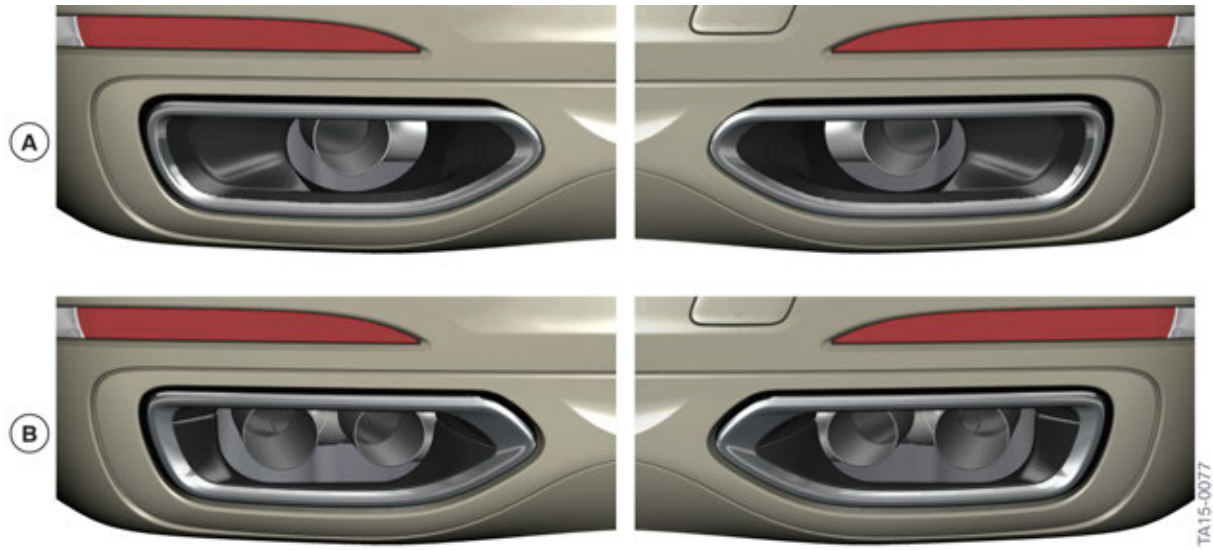

Tailpipe versions for gasoline engine in the G12

Index	Explanation
A	6-cylinder gasoline engine
B	8-cylinder gasoline engine

The tailpipe trims are not part of the exhaust system on the G12, but are integrated in the rear bumper.

G12 Powertrain

4. Cooling

4.1. Active air-flap control

The cooling surfaces at the front of the vehicle can be closed by means of two separate air flaps. This reduces the drag coefficient and thus saves fuel. A further advantage is faster heating up of the engine after a cold start. It is possible to reduce the carbon dioxide emissions by a maximum of 0.8 g/km.

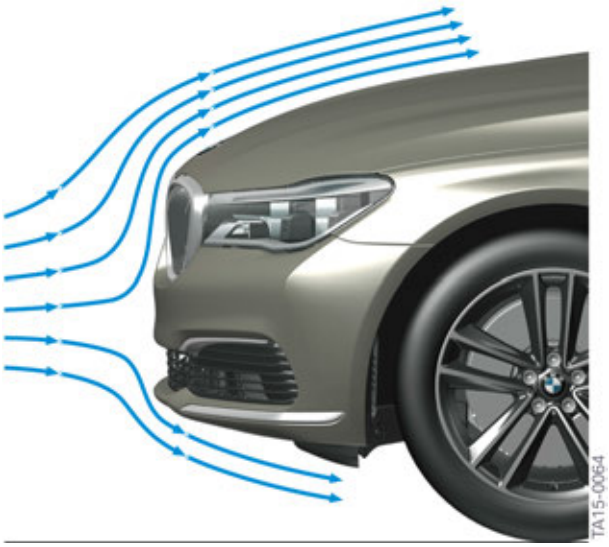

Ambient air flow with closed air flaps on G12

The current cooling air requirement for engine cooling, brake cooling and air conditioning is determined by the Digital Motor Electronics (DME). The adjustable flaps are then moved to the proper position. The air flaps are opened as required. The flaps can be adjusted to different positions. The flaps of the BMW radiator grill are opened only when there is a high cooling requirement. The flaps can also be closed at high driving speeds.

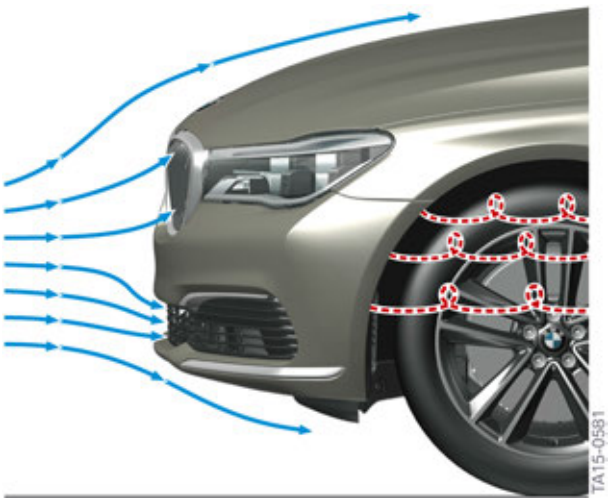

Ambient air flow with open air flaps on G12

G12 Powertrain

4. Cooling

Cooling requirement	Active air-flap control	Positions
Low	Closed at top Closed at bottom	TA15-0065
Low	Closed at top Partially open at bottom (15°– 30°C / 59°– 86°F)	TA15-0066
medium	Closed at top Open at bottom	TA15-0067
maximum	Open at top Open at bottom	TA15-0068

The active air-flap control in the G12 allows a large number of settings to be carried out to control the cool air intake according to demand. Both the upper and lower air flaps are actively opened or closed by a separate electric motor.

G12 Powertrain
4. Cooling

The active air-flap control has a more sensitive sensor system, which detects and evaluates more temperature thresholds. Among other things, the following information is used for evaluation:

- Coolant temperature
- Air conditioning condenser temperature
- Transmission oil temperature
- Catalytic converter temperature
- Charge air temperature
- Brake temperature
- Driving speed

4.2. System wiring diagram

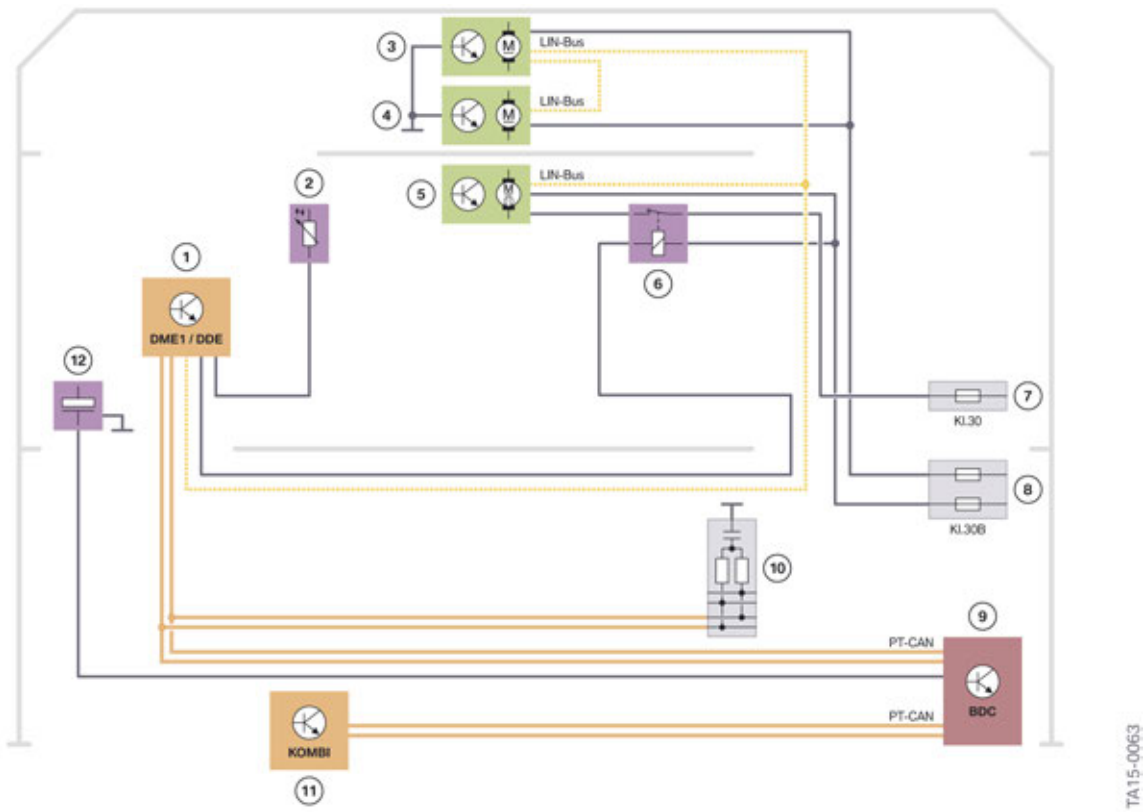

System wiring diagram of active air-flap control in the G12

Index	Explanation
1	Engine control unit (DME)
2	Coolant temperature sensor
3	Active air-flap control, top
4	Active air-flap control, bottom

G12 Powertrain

4. Cooling

Index	Explanation
5	Electric fan
6	Relay for electric fan
7	Power distribution box, engine compartment
8	Power distribution box, front right
9	Body Domain Controller (BDC)
10	CAN terminator 4
11	KOMBI
12	Coolant level sensor

G12 Powertrain

5. Fuel Supply

5.1. gasoline engine

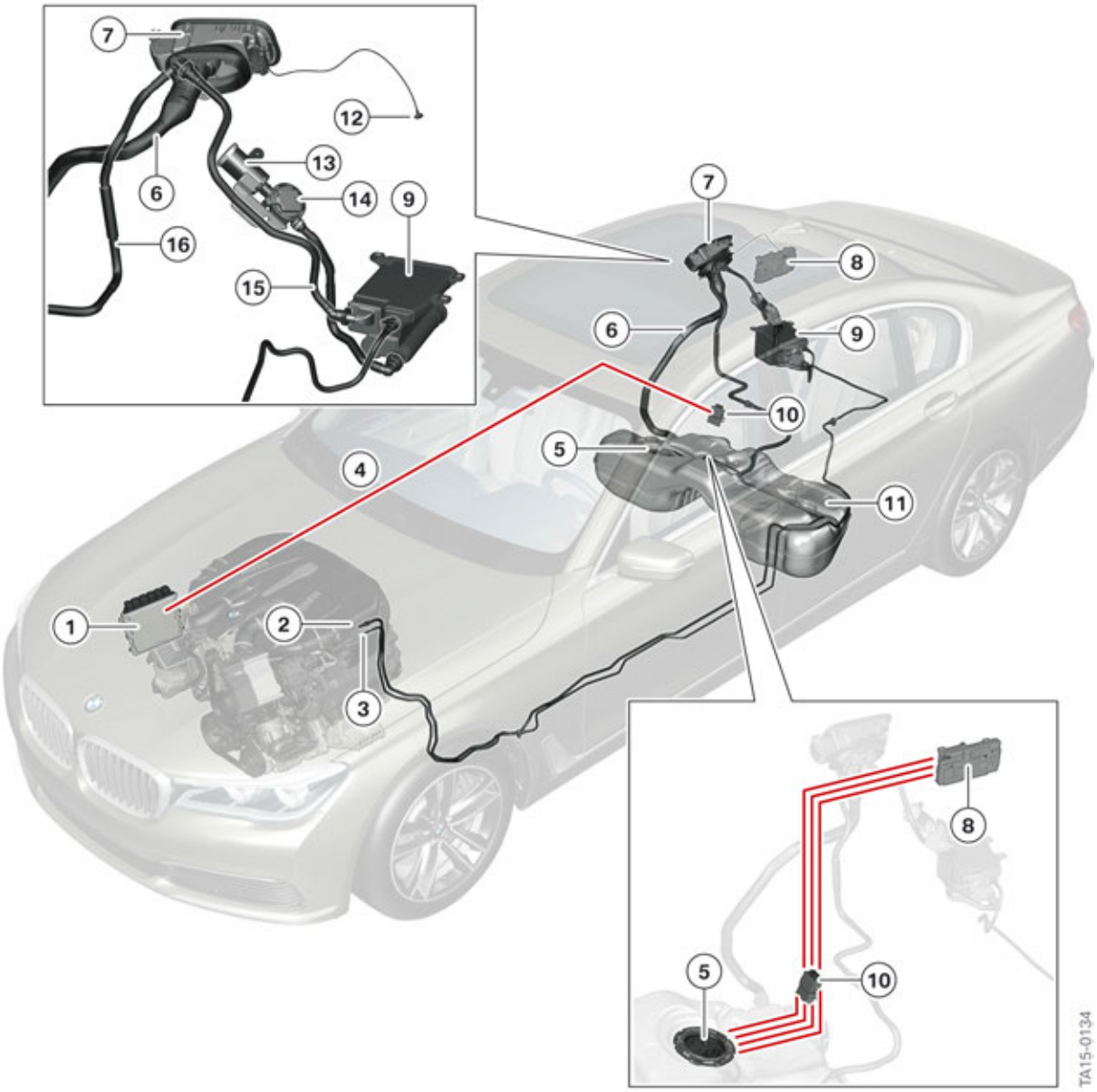

System overview of fuel supply for gasoline engine in the G12

Index	Explanation
1	Digital Motor Electronics (DME)
2	Purge air line, carbon canister
3	Fuel feed from fuel tank
4	Data line to fuel pump control module
5	Delivery unit
6	Fuel filler neck

G12 Powertrain

5. Fuel Supply

Index	Explanation
7	Fuel filler flap
8	Rear right power distribution box
9	Carbon canister
10	Fuel pump control (FPC)
11	Fuel tank (78 l)
12	Emergency release
13	Fresh air filter
14	Natural Vacuum Leak Detection (NVLD)
15	Ventilation line, carbon canister
16	Tank ventilation line

G12 Powertrain

5. Fuel Supply

5.2. System wiring diagram

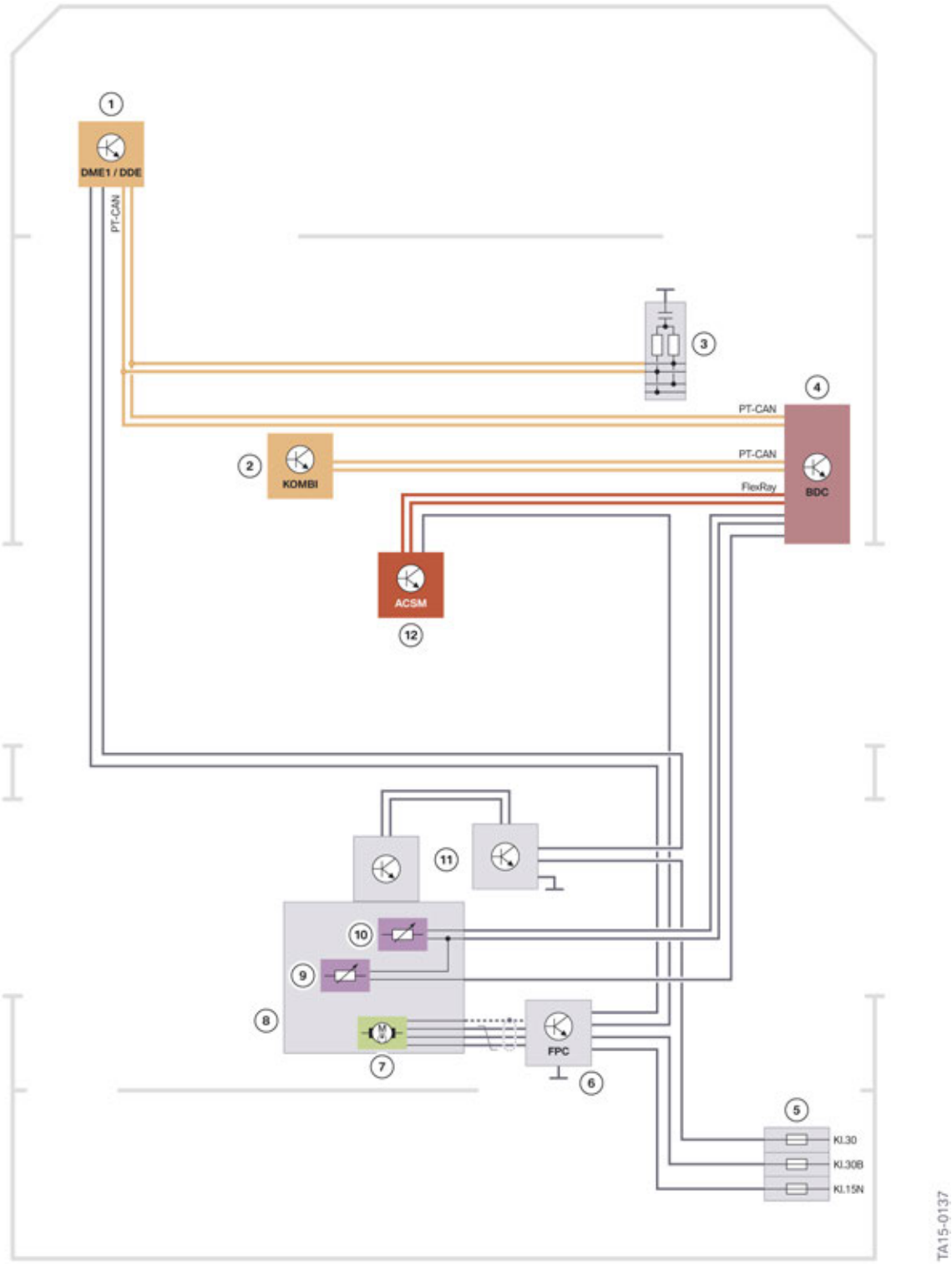

System wiring diagram for fuel supply in G12

G12 Powertrain

5. Fuel Supply

Index	Explanation
1	Engine control unit (DME)
2	Instrument panel (KOMBI)
3	CAN terminator 4
4	Body Domain Controller (BDC)
5	Rear right power distribution box
6	Fuel pump control (FPC)
7	Electric fuel pump
8	Delivery unit
9	Fuel level sensor, left
10	Fuel level sensor, right
11	Natural Vacuum Leak Detection (NVLD)

G12 Powertrain

6. Engine Electrical System

6.1. Engine control unit

A new 8th generation engine control unit from Bosch is used in the G12.

6.1.1. Nano MQS plug connections

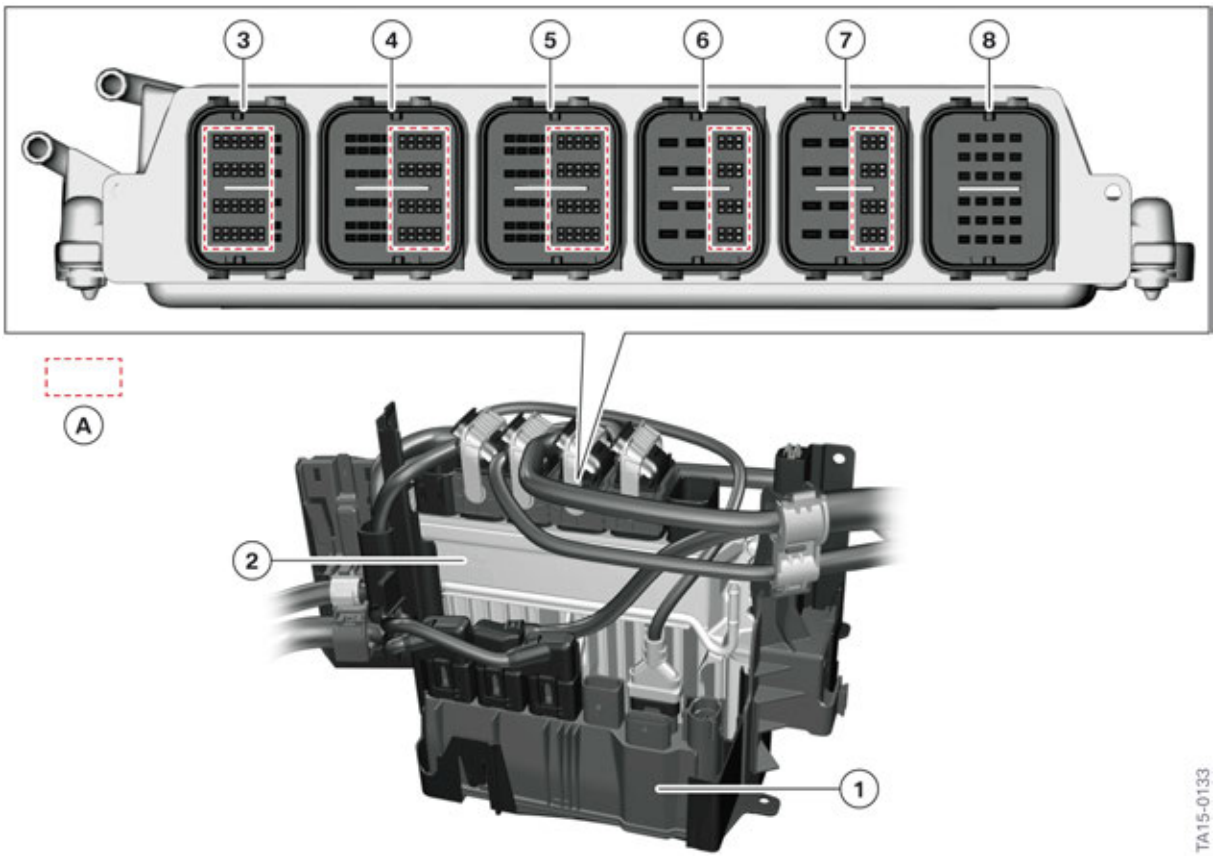

8th generation engine control unit with nano MQS plug connections in the G12

Index	Explanation
A	Nano MQS plug connections (Micro Quadlok system)
1	Integrated supply module
2	8th generation engine control unit
3	Vehicle module (module 100)
4	Sensor module 1 (module 200)
5	Sensor module 2 (module 300)
6	Valvetronic or preheating control (module 400)
7	Supply module (module 500)
8	Ignition and injection module (module 600)

5 of the 6 connector module of the engine control unit are equipped with a nano MQS plug connection (Micro Quadlok system) (see 3).

The nano MQS plug connection offers the following advantages:

- Low space requirement
- Minimum mass
- High vibration resistance

With a minimum wire cross-section of 0.13 mm² – 0.35 mm², the compact nano MQS plug connection offers a significant weight advantage combined with exceptionally good vibration resistance. As a result of the reduced installation dimensions, it was possible to reduce the space requirement on the PC board. The nano MQS plug connection can be operated with currents of up to a max. 3 A.

Measurements on the wiring harness must be performed exclusively using the measuring procedures approved by BMW. Use of the incorrect tools, such as measuring probes, can damage the plug-in contacts.

System overview with nano MQS plug connections

The following systems are also equipped with the new nano MQS plug connection.

- Roof function center
- Reversing camera
- Rear Seat Entertainment system
- Telematic Communication Box (TCB)
- Head unit
- Digital Motor Electronics DME
- Camera-based assistance systems
- Interior light
- Storage shelf speakers

6.1.2. Control unit code for Digital Motor Electronics DME

The control unit code (DME 8.x.yH) can be interpreted as follows.

Abbreviation	Meaning
DME	Digital Motor Electronics
8	Control unit generation (modular platform for gasoline and diesel engines)
X	Number of cylinders as hexadecimal figure
y	Vehicle electrical system architecture
H	Hybrid version

Number of cylinders as hexadecimal figure:

- 3 = 3-cylinder engine
- 4 = 4-cylinder engine
- 6 = 6-cylinder engine
- 8 = 8-cylinder engine
- C = 12-cylinder engine

Vehicle electrical system architecture:

- 0 = Vehicle electrical system version 1 (large series)
- 1 = Vehicle electrical system version 2 (small series)

Examples for gasoline engines

- DME 8.4.0H = B48 PHEV* (vehicle electrical system version 1)
- DME 8.6.1 = B58
- DME 8.8.0 = N63TU2
- DME 8.C.0 = N74TU

*PHEV = Plug-in Hybrid Electric Vehicle.

6.1.3. Special tools

Tools for nano MQS plug connections

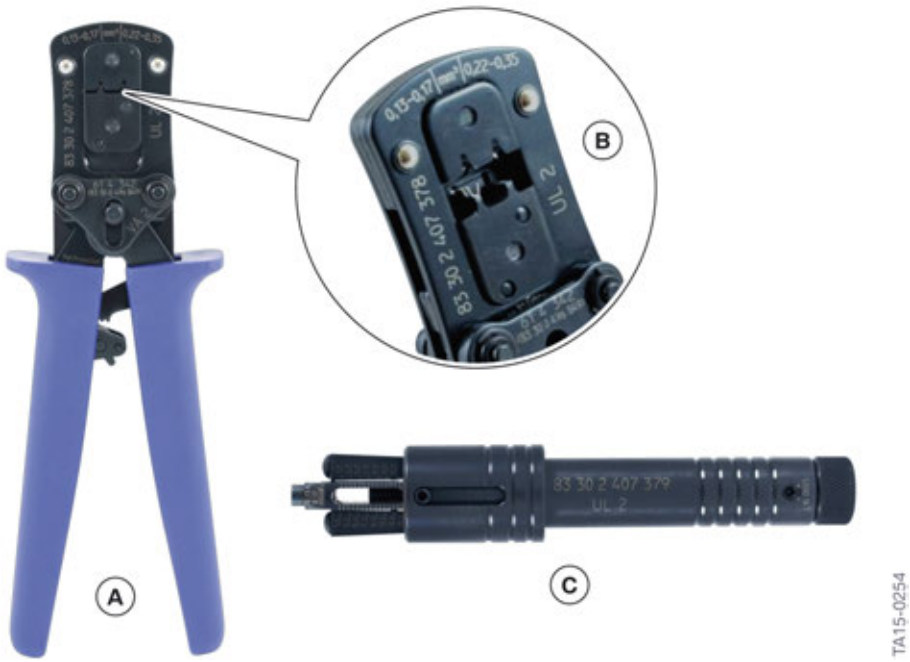

Tools for nano MQS plug connections

Index	Explanation
A	Crimping pliers
B	Crimping pliers head
C	Insulation stripping tool

The tools show above are available to BMW Service for repair of the nano MQS connectors. The crimping pliers can be separated from the crimping pliers head and used with various other attachments.

The length of the wire strand can be preadjusted by means of a depth gauge on the insulation stripping tool.

Various test cables are available for the test cable case for electrical measurements on the nano MQS plug connections.

Tool	Order number
Crimping pliers	0 494 159 or 0 496 849
Crimping pliers head	83 30 2 407 378
Insulation stripping tool for nano MQS connectors	83 30 2 407 379
Test cable set for nano MQS connectors	83 30 2 361 523

Adapter cable DME

The following new special tools are available to Service for electrical measurements on the various control unit connectors of the Digital Motor Electronics DME .

Tool	Order number
V adapter cable (24-pin)	83 30 2 352 995
V adapter cable (64-pin)	83 30 2 352 993
V adapter cable (54-pin)	83 30 2 352 992
V adapter cable (32-pin)	83 30 2 352 991
Test box set	83 30 2 352 990

6.2. Automatic engine start/stop function

The MSA 2.3 is used for the model launch of the G12.

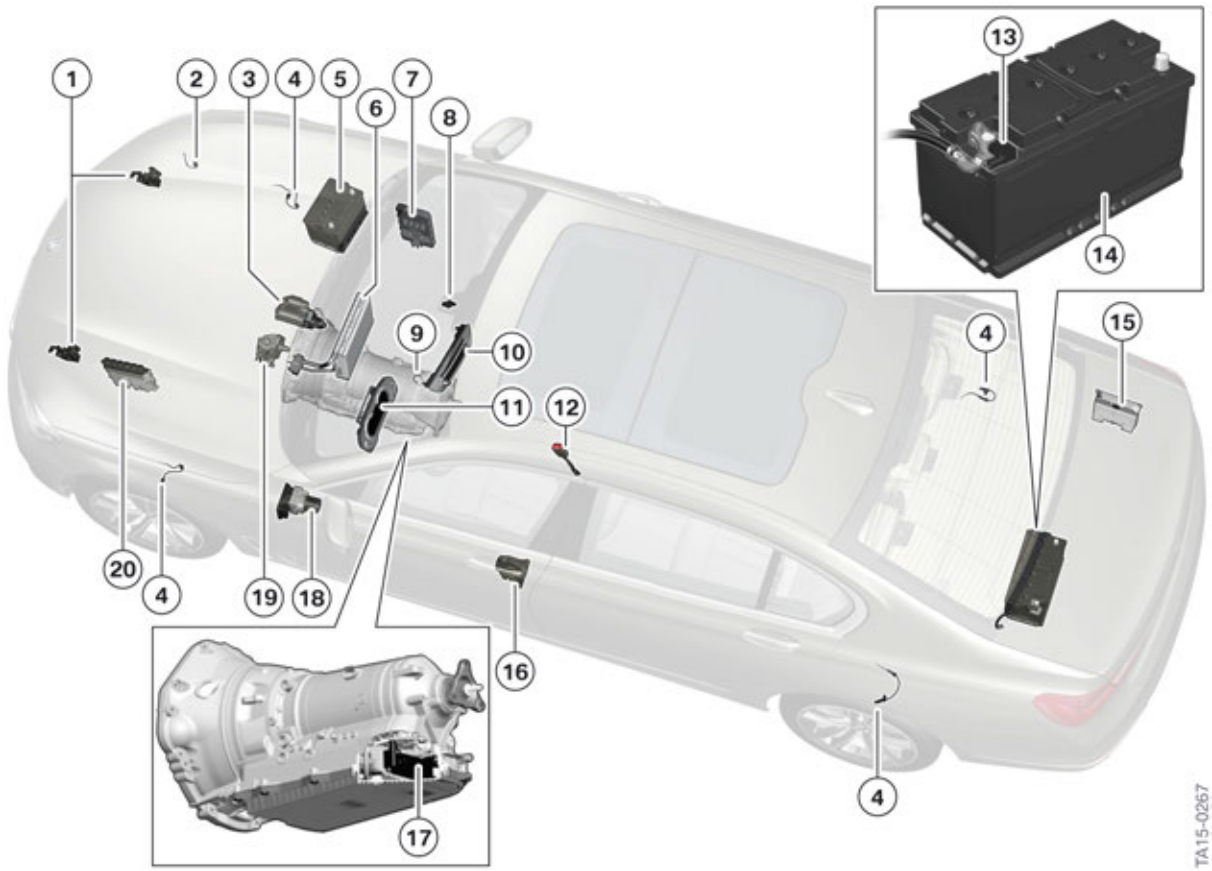

MSA 2.3 system components

G12 Powertrain

6. Engine Electrical System

Index	Explanation
1	Engine compartment lid contact switch
2	Outside temperature sensor
3	Starter
4	Wheel speed sensor
5	AGM battery 60 Ah (For EARS)
6	Evaporator
7	Body Domain Controller (BDC)
8	Condensation sensor
9	START-STOP button
10	Integrated automatic heating / air conditioning
11	Instrument cluster (KOMBI)
12	Seat belt buckle switch
13	Intelligent Battery Sensor (IBS)
14	AGM battery 105 Ah
15	Power Control Unit (PCU) (DC/DC converter)
16	Door contact
17	Hydraulic impulse storage
18	Dynamic Stability Control (DSC)
19	High pressure pump
20	Digital Motor Electronics (DME)

The operating logic is known from the current BMW models. Only the changes that will be introduced with the MSA 2.3 will be described in this section.

The comfort and availability of MSA 2.3 have been further increased compared with MSA 2.2.
The following measures help enhance the comfort:

- The automatic engine start-stop function is initiated at < 3 km/h / < 1.8 mph.
  This increases the availability of the automatic engine start-stop function and makes it easier for customers to understand its operation.
- The automatic engine start-stop function stop is also initiated when the vehicle is at a standstill on uphill and downhill gradients.
- Starting times and starter turning over are reduced.
- Initiation of automatic engine start-stop function stop at driver request.
- Prevention of automatic engine start-stop function stop by targeted "underbraking".
- Reflex start up to higher engine speed is possible in the event of a sudden change in mind.
- Improved stopping and starting comfort.
- Manoeuvrability during automatic engine start-stop function coasting.
- Manoeuvrability during reflex start.
- Steering when at standstill during engine shutdown (straighten steering wheel).

6.2.1. Automatic mode

The automatic engine start-stop function is ready for operation following every engine start.

The automatic engine start-stop function is activated as from a certain driving speed:

- > 5 km/h / > 3 mph

6.2.2. Driving

As long as the vehicle is in motion the driver will not be aware of the automatic engine start-stop function.

Index	Explanation
1	Vehicle moving.
2	Selector lever in drive position "D", driver operates accelerator pedal.
3	Engine running, the engine speed display and fuel consumption display correspond to the driving situation.

The goal of the automatic engine start-stop function is to switch off the engine when the vehicle speed falls below 3 km/h / 1.8 mph on the flat or when the vehicle is at a standstill on uphill and downhill gradients.

6.2.3. Stopping

The stopping process with subsequent engine stop from the driver's point of view is as follows:

Index	Explanation
1	Vehicle is decelerated at a red traffic light, for example.
2	Selector lever remains in the "D" drive position, driver presses the brake pedal to decelerate the vehicle and the vehicle speed drops to < 3 km/h / 1.8 mph or = 0 km/h / 0 mph on uphill or downhill gradients.
3	Engine is switched off, engine speed display shows “Ready”. The vehicle is held by the DSC hydraulics on uphill or downhill gradients.

In the situation depicted above the driver holds the vehicle at a standstill by operating the brake pedal.

Alternatively, the driver can move the selector lever from the "D" to the "P" position and release the brake pedal. The engine remains switched off.

6.2.4. Pullaway

The driver indicates his intention to drive off by releasing the brake pedal then operating the accelerator pedal.

Index	Explanation
1	Driver wishes to continue the journey (green light).
2	The selector lever remains in the "D" drive position, driver releases the brake pedal and then operates the accelerator pedal.
3	The engine is started, the engine speed display changes from “Ready” to idle speed. The vehicle drives off upon subsequent operation of the accelerator pedal. The DSC hydraulics is additionally released on uphill and downhill gradients.

If the driver held the car at a standstill up to this point by operating the brake pedal, the engine starts as soon as the driver releases the brake pedal.

If the driver put the selector lever into position "P" after the engine was switched off automatically, the engine starts automatically if the selector lever is now moved to position "D".

In this case, the automatic engine start is activated by the DSC control unit that monitors the brake pressure, and not automatically via a signal from the brake light switch.

Automatic Hold

If the driver has activated the "Automatic Hold" function, he can also release the brake pedal once the vehicle has come to a standstill. The automatic engine start-stop function also switches the engine off in this case. The vehicle is held at a standstill by the DSC hydraulics. The engine only starts when the driver operates the accelerator pedal.

6.2.5. Automatic engine start-stop function stop on uphill gradients

In contrast to the MSA 2.2, which immediately stopped the engine only up to an uphill or downhill gradient (up to approx. 3.5 %), with the MSA 2.3 the engine is also stopped on uphill or downhill gradients at vehicle standstill. .

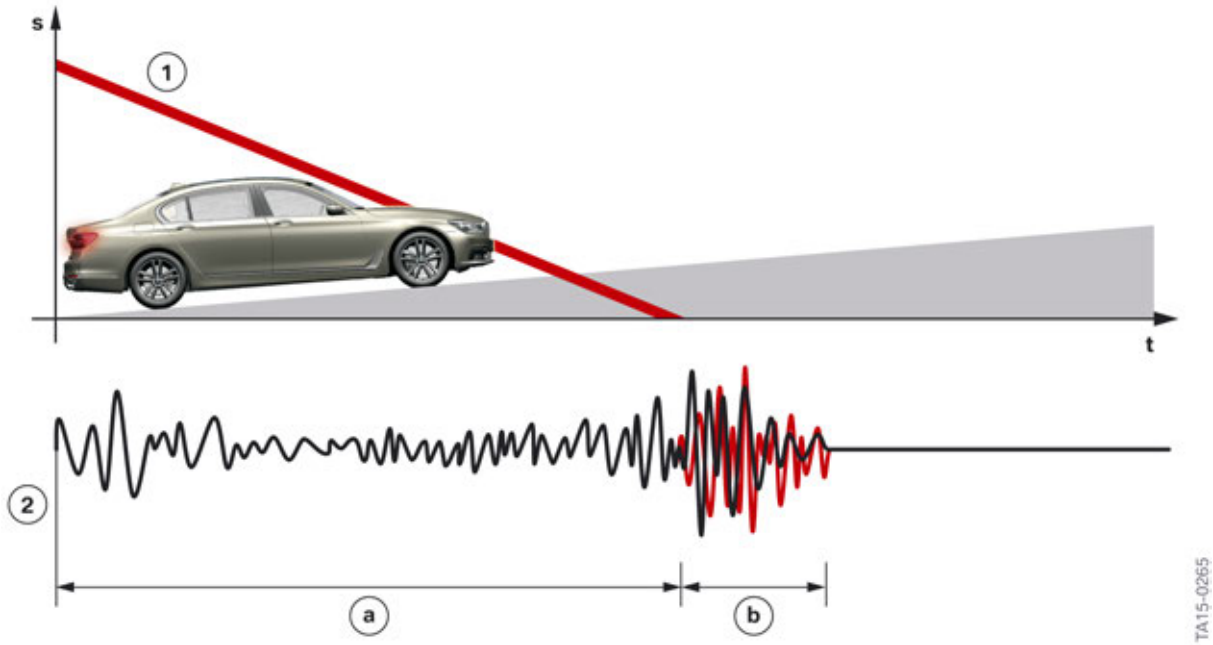

MSA 2.3 stopping deceleration on uphill gradient

Index	Explanation
1	Vehicle speed
2	Vehicle excitation
a	Roadway excitation
b	Stopping jerk of the vehicle

This is made possible by communication of the MSA via the engine control DME, electronic transmission control (EGS) and Dynamic Stability Control (DSC). If an engine stop is initiated via MSA 2.3, the vehicle is simultaneously also held on uphill gradients via the DSC hydraulics (drive-off assistant). The vehicle does not roll back on uphill gradients even if the driver changes his mind with a so-called reflex start.

6.2.6. Comfort concept

It was possible to further improve the stopping and starting comfort by intelligent interaction of the engine control DME, electronic transmission control (EGS) and the brake DSC.

- By inclusion of the Valvetronic for the gasoline engine, the Valvetronic is adjusted almost completely to zero lift while the engine is being switched off. After the engine has stopped, the Valvetronic is adjusted to idle position again in order to be prepared for a possible engine start.
- The vehicle can also be held securely on uphill and downhill gradients for an automatic engine stop and start by targeted use of the DSC hydraulics (drive-off assistant) in combination with the MSA 2.3.
- The MSA 2.3 permits comfortable engine stopping and starting due to the fact that the transmission in the G12 can now be disconnected via the release at standstill function for the torque converter and thus for the automatic transmission. Without this release at standstill, any disturbing torque fluctuations that occur as a result of the automatic engine stop or start will be felt in the drive train.

6.2.7. Start strategy

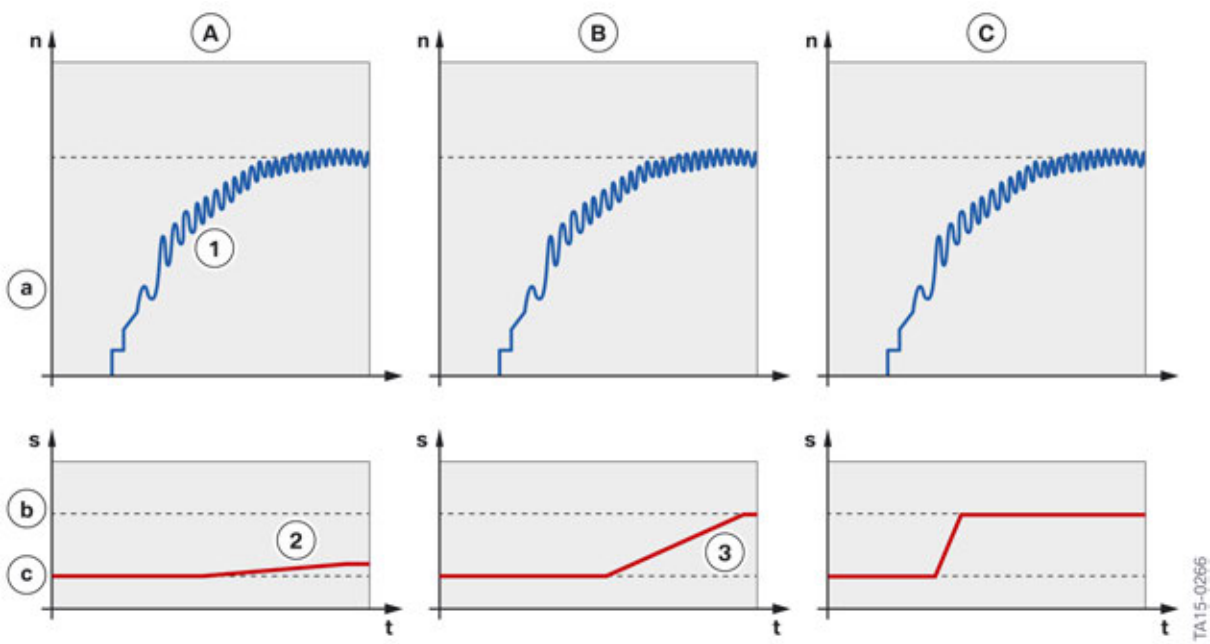

MSA 2.3 start strategy

Index	Explanation
A	System start via release at standstill (without starting request)
B	Convenient start (start request without accelerator pedal)
C	Dynamic start (start request with accelerator pedal)
1	Engine speed
2	Release at standstill active

Index	Explanation
3	Position of multidisc clutch
a	Idle speed
b	Multidisc clutch closed
c	Multidisc clutch open

With the MSA 2.3, the automatic engine start of the G12 with automatic transmission was further optimized by use of the release at standstill function.

It is now possible to start the engine with even more comfort and without any influence on the drive train at the system start by using the release at standstill function.

System start via release at standstill	Convenient start	Dynamic start
The automatic engine start is effected by a system switch-on request (e.g. by the heating and air conditioning system), the brake pedal remains pressed.	The automatic engine start is effected by releasing the brake, the accelerator pedal is not pressed.	The automatic engine start is effected by releasing the brake, the accelerator pedal is pressed for drive off.
The engine speed is slowly increased until it reaches the idle speed.	The engine speed is slowly increased until it reaches the idle speed.	The engine speed is increased quickly.
The engine remains disconnected from the automatic transmission and thus from the drive train via the release at standstill function.	The multidisc clutch in the automatic transmission closes slowly.	The multidisc clutch in the automatic transmission closes quickly.
This means that there is no influence on the drive train, thereby preventing a longitudinal jerk by the drive train which can be felt by the driver.	Smooth and comfortable drive-off is made possible.	Quick drive off is therefore made possible.

For an engine start with fewer vibrations, with the system start and convenient starting the engine speed is initially increased quickly and then slower until it reaches the idle speed. The ignition timing is adjusted to the "late" direction for this.

6.2.8. Reflex start in the event of a change in mind

The so-called reflex start is a significant challenge for the automatic engine start-stop function. This is the situation where the engine has not yet completely stopped after an automatic engine start-stop function stop, but an automatic start is already requested again. It was not possible with conventional starter motors to engage in a rotating ring gear during this reflex start. With the MSA 2.2, a new starter motor technology was used for the first time which enabled comfortable engagement up to an engine speed of 150 rpm.

With the introduction of the MSA 2.3, it has now been possible to increase this to > 500 rpm. Since the possibilities with a conventional starter motor are exhausted here, this reflex start is done by the engine control DME. This function is referred to as a “flying start”:

- Engine speed > 500 rpm
  The "flying start" function can be applied up to an engine speed of > 500 rpm. For this purpose, combustion is resumed again during the engine stopping process in the event of an automatic engine start-stop function stop and an initiated reflex start. This is achieved on the gasoline engine by targeted ignition in the relevant cylinders.
- Engine speed < 500 rpm
  If the speed drops to below 500 rpm, the "flying start" function for a reflex start is no longer possible. In this case, it is necessary to wait until the engine speed has fallen below 150 rpm. The engine can be started again by means of the starter motor when the engine speed has dropped below 150 rpm.

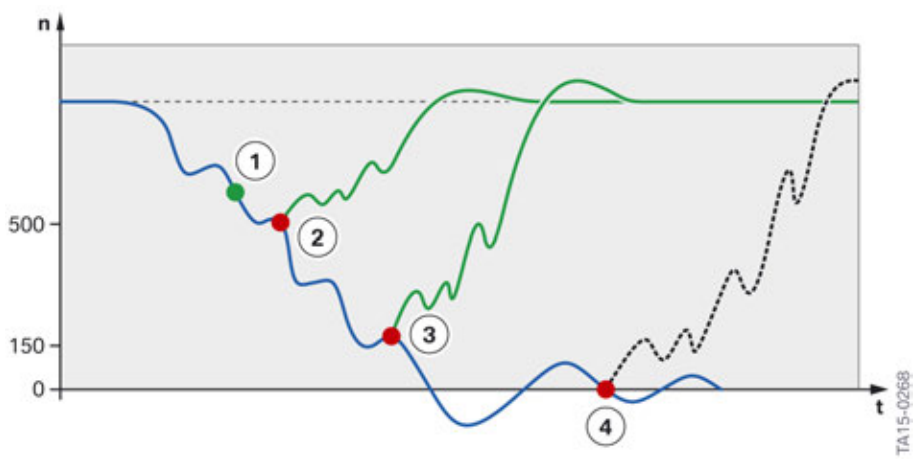

MSA 2.3 reflex start

Index	Explanation
1	Driver request “START”
2	“Flying start” 500 rpm (MSA 2.3)
3	Engagement with starter motor KSopt150 150 rpm (MSA 2.2)
4	Engagement with starter motor KSopt0 0 rpm (MSA 2.1)

The abbreviation KSopt stands for optimized conventional starter motor.
KSopt150: Reinforced starter motor that can engage up to 150 rpm.
KSopt0: Reinforced starter motor that can engage only at engine standstill.

6.2.9. Automatic engine stop at driver request

Under certain conditions, it is possible that the driver would like to initiate an automatic engine start-stop function stop, e.g. with active switch-off inhibitor.

Index	Explanation
1	Vehicle is decelerated to a standstill at a red traffic light, for example. The engine continues running.
2	After the vehicle has come to a standstill, the brake pedal is briefly pressed forcefully and then is immediately held with the usual pedal force or "P" is selected briefly.
3	Engine is switched off, engine speed display shows “Ready”.

6.2.10. Manoeuvrability for automatic engine start-stop function coasting or stop

With MSA 2.3, steering is possible during automatic engine start-stop function coasting below V < 3 km/h / 1.8 mph or when the vehicle is stopped V = 0 km/h. In addition, a second 60 Ah AGM auxiliary battery may be used, depending on the optional equipment (SA), which supports the vehicle electrical system at engine standstill, e.g. in the automatic engine start-stop function stop phases, and thus also supports steering via the EPS when coasting below V > 3 km/h / 1.8 mph or in the event of an engine standstill V = 0 km/h.

Further information on the voltage supply for the 12 volt systems is provided in the Technical Training Manual “G12 General Vehicle Electronics”.

6.2.11. Switch-off inhibitors

Under certain conditions it is necessary to suppress the automatic engine start-stop function.
The following parameters change with the MSA 2.3 compared with the MSA 2.2:

- The vehicle is rolling on uphill or downhill gradients (driving speed > 1 km/h / .6 mph).
- The ambient temperature is above 35 °C / 95°F with the air conditioning switched on (30 °C / 86°F for MSA 2.2).

6.2.12. Switch-on prompts

Conversely, it may also be necessary to start the engine. The following parameters change with the MSA 2.3 compared with the MSA 2.2:

- The ambient temperature is above 35° C / 86°F with air conditioning switched on.
- the vehicle rolls (vehicle speed > 3 km/h / > 1.8 mph).

6.3. Active Sound Design (ASD)

With Active Sound Design ASD, the sound of the respective engine is **not** changed but is emphasized depending on the selected driving mode.

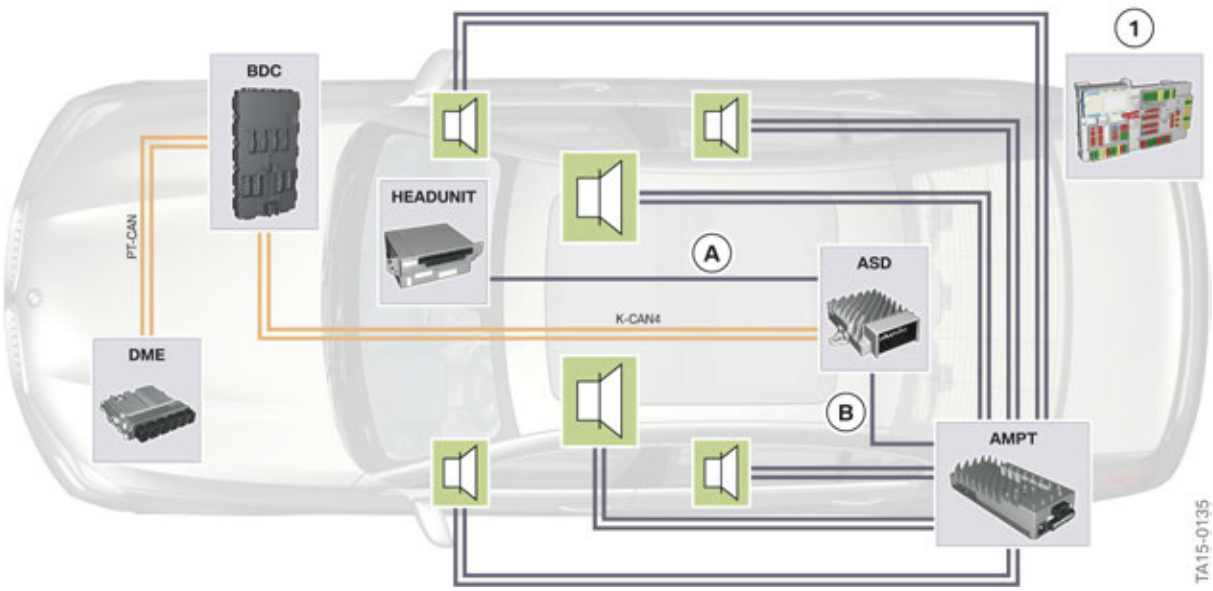

Active Sound Design ASD in the G12

Index	Explanation
A	Audio signal of the headunit
B	Audio signal of the Active Sound Design (ASD) control unit (processed audio signal for perfect engine sound)
1	Rear right power distribution box
AMP	Amplifier
ASD	Active Sound Design control unit
BDC	Body Domain Controller
DME	Digital Motor Electronics
Head unit	Control unit for entertainment and infotainment functions
K-CAN4	Body CAN4
PT-CAN	Powertrain CAN

G12 Powertrain

6. Engine Electrical System

The engine control unit controls the Active Sound Design (ASD) of the vehicle using characteristic data such as engine speed, load and driving speed. The ASD transports the optimum sound into the vehicle interior.

The Active Sound Design (ASD) can be temporarily deactivated during a test drive (noise analysis drive) by means of the BMW diagnosis system ISTA. However, permanent deactivation of the ASD is not possible. If the ASD is deactivated via the ISTA function "ASD muting ON", the ASD will remain switched off only until the next terminal change.

A deactivated ASD is activated again after every terminal change.

G12 Powertrain
7. Automatic Transmission

The G12 vehicle is equipped with the revamped 8HPTU automatic transmission, which is already known from the F23 (2 Series convertible) and F85/F86 (X5 M, X6 M).

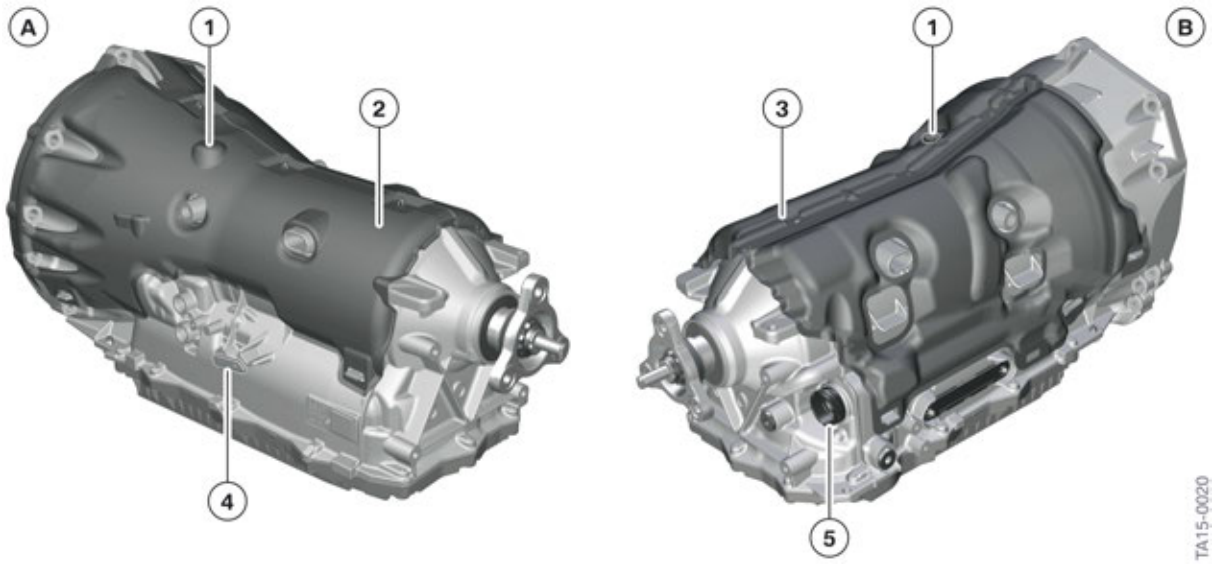

8HPTU automatic transmission with acoustic encapsulation in the G12

Index	Explanation
A	8HPTU for 6-cylinder engines
B	8HPTU for 8-cylinder engines
1	Transmission breather
2	Acoustic encapsulation (three-part)
3	Acoustic encapsulation (two-part)
4	Mechanism for emergency release
5	Electrical connection (mechatronics to vehicle electrical system)

7.1. Transmission variants

Different transmission variants are used depending on the engine installed.

Engine	GA8HP50Z	GA8HP75Z
6-cylinder gasoline engine (B58)	X	
8-cylinder engine gasoline engine (N63TU2)		X

G12 Powertrain

7. Automatic Transmission

7.2. Highlights

The following further developments made it possible to increase the comfort, dynamics and efficiency of the revamped 8-speed automatic gearbox:

- Improved driving comfort through hot-end decoupling of the rotational imbalance of the engine by means of a centrifugal pendulum.
- Improved shifting comfort through slightly increased gear steps (2 modified planetary gear sets).
- Increased efficiency through optimum gear spread and gear stepping.
- Reduction of vehicle-specific insulation measures due to acoustic encapsulation on the transmission.
- Functional enhancements in the area of ConnectedShift.
- Enhanced customer experience due to new operating possibilities with the driving experience switch or shift paddles.

7.3. Description

The following table provides an overview of the composition of the different transmission codes.

Position	Meaning	Index	Explanation
1	Description	G	Transmission
2	Type of transmission	A	Automatic transmission
3	Number of gears	6 8	6 forward gears 8 forward gears
4	Type of transmission	HP	Hydraulic planetary gear train
5 + 6	Transferable torque	19 26 32 45 (General Motors Powertrain) 45 (Zahnradfabrik Friedrichshafen) 50 70 90 95	300Nm 600 Nm 720Nm 350Nm 450 Nm 500Nm 700 Nm 900Nm 950Nm
7	Manufacturer	G J R Z H	Getrag Jatco General Motors Powertrain Zahnradfabrik Friedrichshafen In-house part

7.4. Technical data

The 8HPTU modular transmissions 8HP50 and 8HP75 replace the established 8-speed automatic transmissions 8HP45 and 8HP70, which had their series introduction in the F07 in 2009.

The following table shows a comparison of the two transmission generations.

Technical data	Unit	8HP50 (new)	8HP45 (old)	8HP75 (new)	8HP70 (old)
Maximum input power, gasoline	kW	260	240	350	380
Maximum input torque, gasoline	Nm	500	450	700	700

The following table shows the different transmission ratios in the different drive positions of the respective automatic transmissions.

Drive position	8HP50 (new)	8H75/95 (new)	8HP45 (old)	8HP70/90 (old)
1st gear	5.000	5.000	4.714	4.714
2nd gear	3.200	3.200	3.143	3.143
3rd gear	2.143	2.143	2.106	2.106
4th gear	1.720	1.720	1.667	1.667
5th gear	1.314	1.313	1.285	1.285
6th gear	1.000	1.000	1.000	1.000
7th gear	0.822	0.823	0.839	0.839
8th gear	0.640	0.640	0.667	0.667
Reverse gear	3.456	3.478	3.295	3.317
P	—	—	—	—
N	—	—	—	—
Spread	7.81	7.81	7.07	7.07

The spread is defined by the ratio between the lowest and highest gears. The spread can be calculated as follows:

- Ratio of 1st gear : ratio of 8th gear = spread.

Example calculation of spread for the 8HP50 (new) transmission:

- 5.000 : 0.640 = 7.81.

7.5. Shift matrix

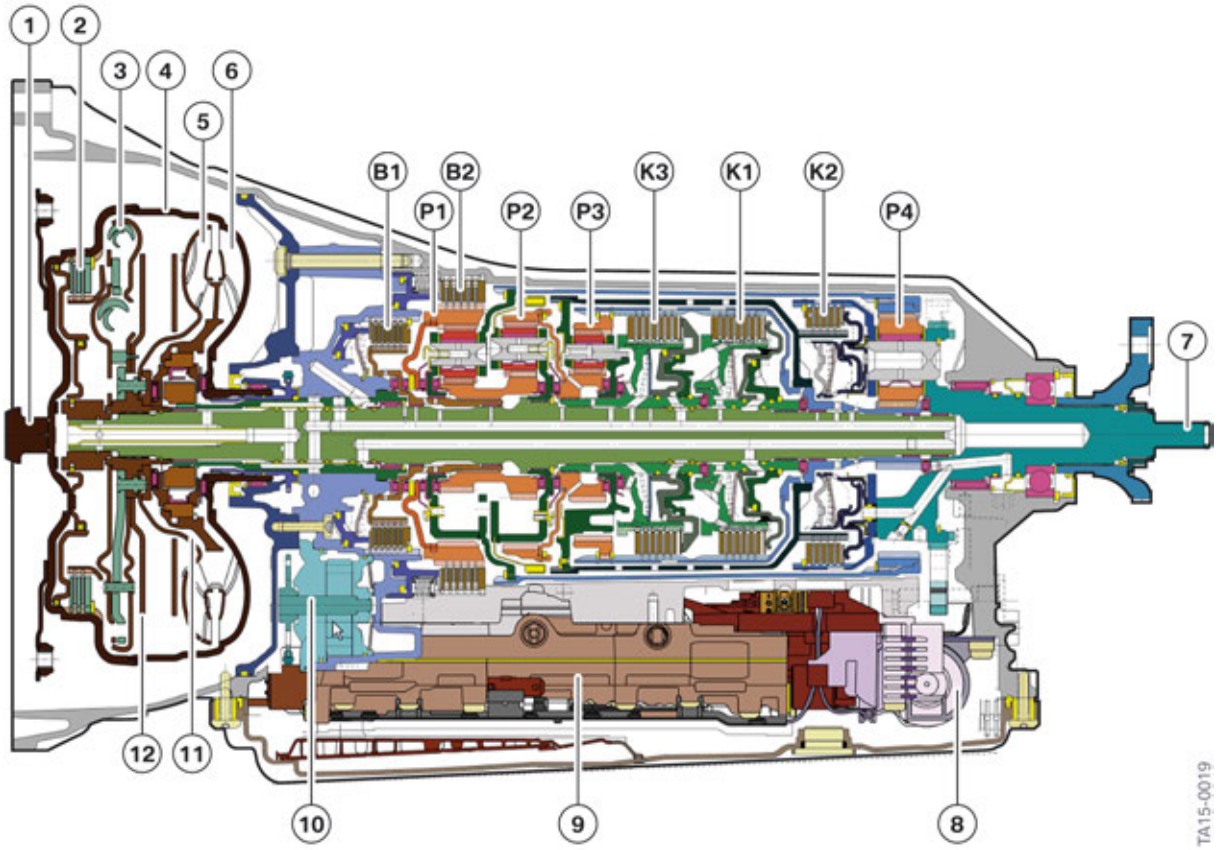

Overview of automatic transmission 8HPTU in the G12

Index	Explanation
1	Guide pin
2	Converter lockup clutch
3	Spring/Damper system
4	Torque converter
5	Turbine wheel
6	Impeller
7	Transmission output shaft
8	Hydraulic impulse storage
9	Mechatronics
10	Vane-type compressor
11	Stator
12	Centrifugal pendulum
B1	Brake1

Index	Explanation
B2	Brake2
K1	Clutch 1
K2	Clutch 2
K3	Clutch 3
P1	Planetary gear set 1
P2	Planetary gear set 2
P3	Planetary gear set 3
P4	Planetary gear set 4

The following table shows the shift matrix of the different gears of the 8-speed automatic transmission.

Drive position	Brakes		Clutch		
	B1	B2	K1	K2	K3
1st gear	X	X	X	—	—
2nd gear	X	X	—	—	X
3rd gear	—	X	X	—	X
4th gear	—	X	—	X	X
5th gear	—	X	X	X	—
6th gear	—	—	X	X	X
7th gear	X	—	X	X	—
8th gear	X	—	—	X	X
Reverse gear	X	X	—	X	—
P	X	—	—	—	—
N	X	—	—	—	—
Spread	—	—	—	—	—

7.6. Torque converter with centrifugal pendulum

In order to reduce fuel consumption and carbon dioxide emissions, high-charged engines are used, the number of cylinders is reduced and the drivable speeds are lowered.

However, with these measures the rotational imbalance at the crankshaft is increased which is caused by the acceleration during the power cycle and deceleration during the compression cycle. This irregular rotation is the reason for torsional vibrations in the drive train.

The occurring torsional vibrations near the source, i.e. in the torque converter, are therefore minimized.

When the converter lockup clutch is open there is a difference in speed or a slip in the torque converter between pump and turbine wheel. The torsional vibrations of the engine can be compensated by this slip and the hydrodynamic power transmission. However, the slip has a negative effect on the efficiency.

When the converter lockup clutch is closed there is a positive connection between the impeller and the turbine wheel. A slip is avoided, however there is no longer any vibration-reducing effect. This is why a spring/damper system is installed which reduces the torsional vibrations of the engine.

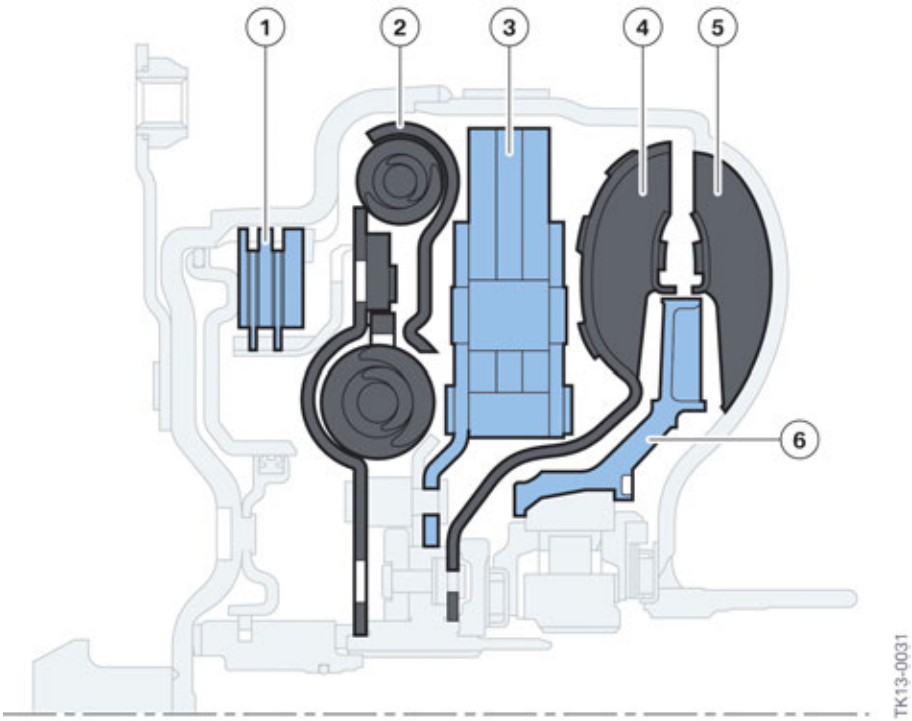

Torque converter with centrifugal pendulum

Index	Explanation
1	Converter lockup clutch
2	Spring/Damper system
3	Centrifugal pendulum
4	Turbine wheel
5	Impeller
6	Stator

The centrifugal pendulum is secured between the turbine wheel and spring/damper system.

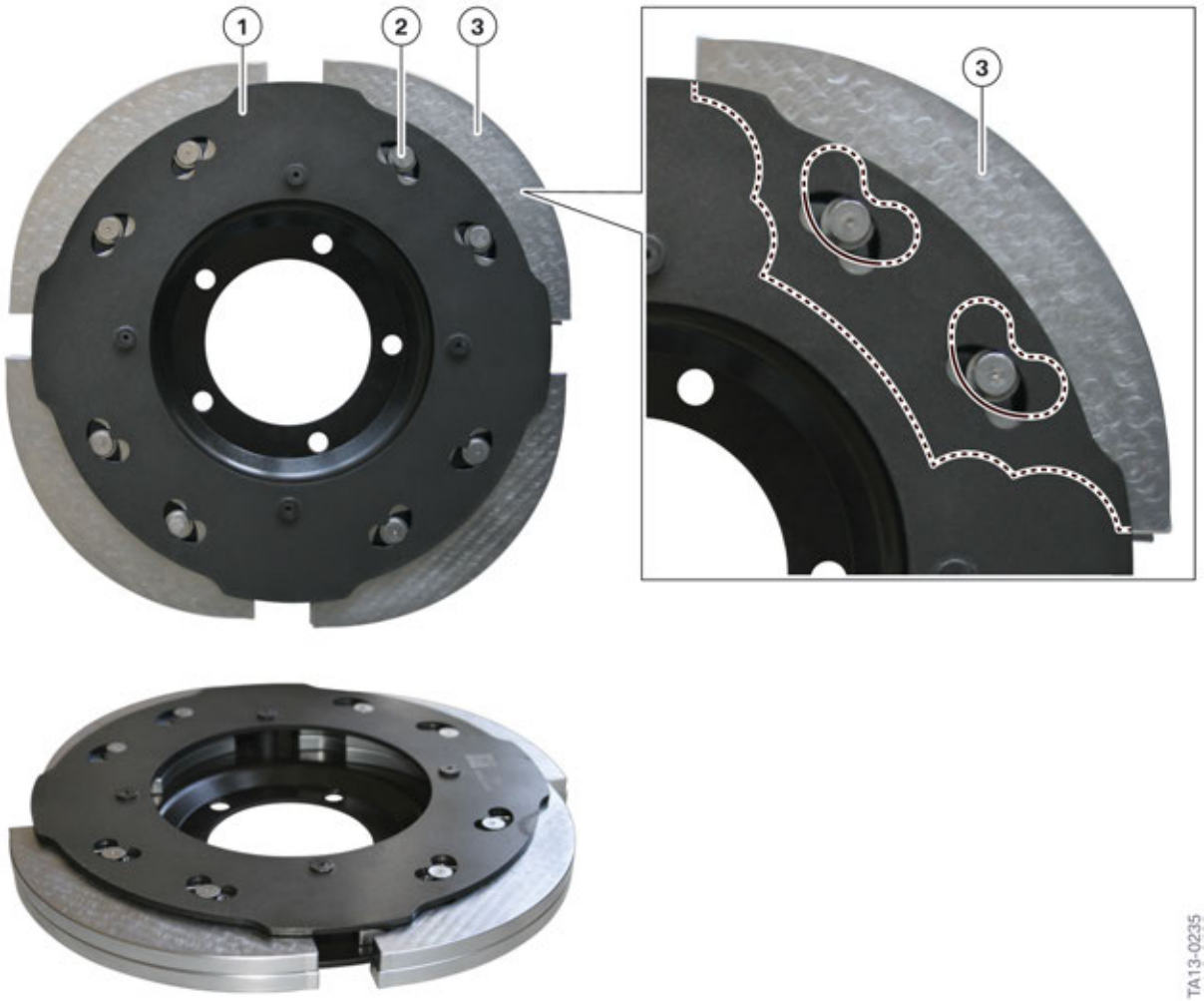

Centrifugal pendulum

Index	Explanation
1	Sheet metal
2	Roller
3	Mass

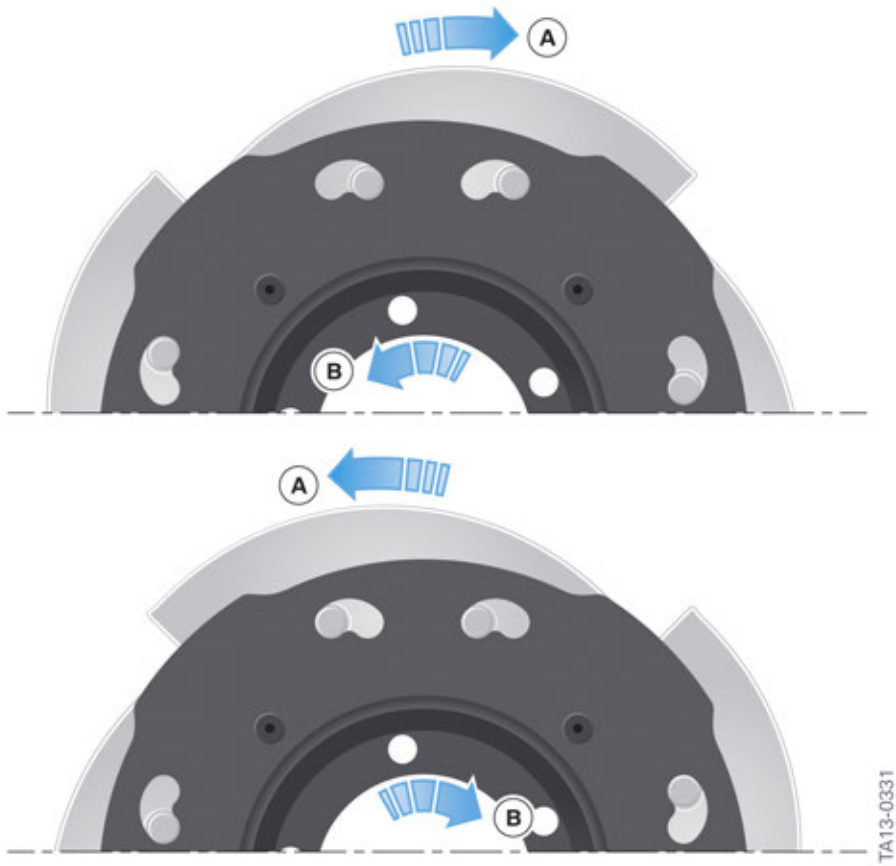

Function of centrifugal pendulum

Index	Explanation
A	Oscillating mass
B	Torsional vibrations of the engine

The centrifugal pendulum consists of 2 guide plates which are attached to each other and which allow damping masses to move between them on defined paths. Arch-shaped curved tracks are integrated in the sheet metal and in the masses, which serve as running tracks. The damping masses are connected with the guide plates by two rollers in each case and can move along the curved paths.

The centrifugal pendulum consists of several oscillating masses (dynamic vibration absorbers). They vibrate contrary to the torsional vibrations and compensate for these. At low engine speeds, i.e. precisely when the annoying vibrations occur most, the deflection of the dynamic vibration absorbers is particularly big.

The following advantages result from deleting the torsional vibrations:

- The converter lockup clutch can remain closed over a larger engine speed range.
- The slip in the converter lockup clutch can be reduced and thus also the slip percentage in the torque converter. The efficiency is therefore improved.
- Lower engine speeds can be driven.

These measures lead to a reduction of the fuel consumption and improved acoustics in the passenger compartment.

7.7. Sport automatic transmission

In the standard equipment Steptronic Sport transmission (2TB), the customer additionally receives 2 shift paddles on the steering wheel and additional functions such as the Launch Control.

7.7.1. Launch Control

As an additional customer function, vehicles with the optional equipment Steptronic Sport transmission (2TB) are equipped with a Launch Control. This function allows customers to reproduce the manufacturer's specifications for 0 - 100 km/h / 0 - 62 mph acceleration (racing start) in good ambient conditions when the transmission is at operating temperature.

The following illustration shows the 5 steps for activation of Launch Control.

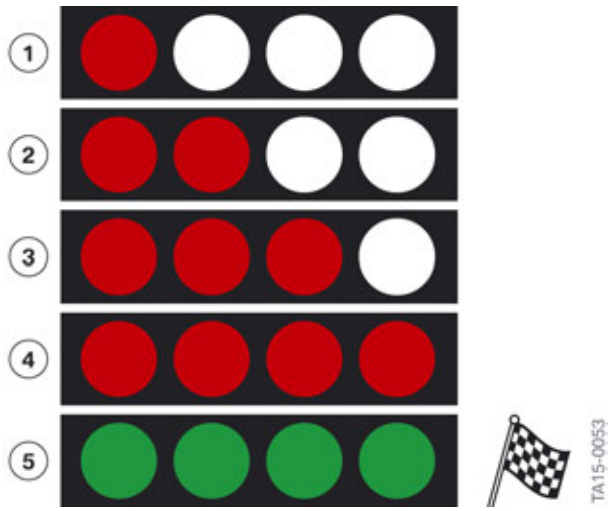

Activation of Launch Control in the G12

Index	Explanation
1	Activate Dynamic Traction Control (DTC) (press DTC button briefly)
2	Move selector lever to "S" position (Sport)
3	Depress the brake very firmly and hold
4	Press accelerator pedal to kick-down
5	Release brake and hold accelerator pedal in kick-down position

The additional acceleration is achieved by shifting to the next-higher gear without reducing the engine torque.

7.7.2. Functional enhancements of the shift paddles

Shift paddles on the automatic Sport transmission of the G12

Index	Explanation
+	Upshift
–	Downshift

The driver can change to manual shift mode by means of the shift paddles. The driver can manually shift to the next higher or lower gears by actuating the +/- shift paddles.

Activation of manual shift mode in "D" position (Drive)

If one of the two shift paddles (+ or –) is pressed in "D" position, the electronic transmission control (EGS) switches to a time-limited manual shift mode. Depending on the route profile, this mode is cancelled automatically either earlier or later (normal value approximately 20 s) if one of the two shift paddles is not actuated in this time. The driving profile is detected by means of the steering wheel movements as well as the dynamic acceleration forces acting on the vehicle.

It is possible to cancel manual mode prematurely by a long pull on the + shift paddle.

Activation of manual shift mode in "S" position (Sport)

If one of the two shift paddles (+/-) is actuated, the electronic transmission control (EGS) permanently switches to manual shift mode.

It is possible to cancel manual mode again by a long pull on the + shift paddle.

Activation of coasting

The driver can manually activate coasting mode by means of the following configuration:

- Gear selector switch in D position (Drive)
- Driving experience switch in ECO PRO mode
- Accelerator pedal not actuated
- Coasting mode activated in ECO PRO configuration menu (CID)
- Multiple operation of + shift paddle until no logical higher gear selection is possible

The vehicle now switches to coasting mode. The engine is disengaged from the transmission in coasting mode. The engine continues running at idle speed.

Coasting mode is cancelled again by actuating the – shift paddle or the accelerator pedal.

The respective mode is displayed to the driver by means of the BMW EfficientDynamics display in the instrument cluster.

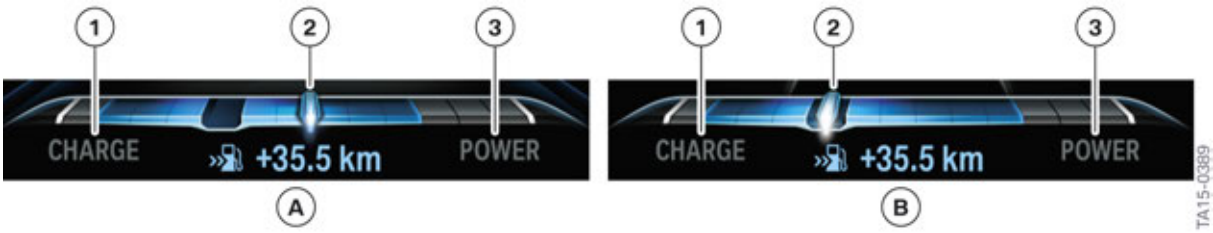

BMW EfficientDynamics display in the G12

Index	Explanation
A	Coasting mode deactivated
B	Coasting mode activated
1	Energy recovery display (system battery charging)
2	BMW EfficientDynamics marker
3	Acceleration display

7.8. ConnectedShift

ConnectedShift uses the following systems for a predictive shift strategy:

- Use of the navigation data
- Use of the radar sensors

Use of the navigation data is already known from the 5 Series LCI. Use of the navigation data is mentioned in this document to better understand the system.

7.8.1. Use of the navigation data

ConnectedShift uses navigation data for a forward-thinking shift strategy of the automatic transmission. If, for example, a sharp bend is detected, the automatic transmission shifts down early and the gear is retained in the bend.

The route guidance of the navigation system does not need to be activated for the function. However, the identification of a turn-off request, for example by the active route guidance or operating the turn indicator, helps to control the system more accurately. Up-to-date navigation map data also influences the control accuracy.

Advantages

ConnectedShift offers various advantages depending on the route:

Traffic guidance	Advantages
Bend/Subsequent bend	• Higher engine braking effect before the bend • Tensile force reserve for accelerating from the bend • Optimized shift characteristics in the bend
Intersections	Upon recognized turn-off request by active route guidance or operation of the turn indicator: • Higher engine braking effect before intersections • Optimized shift characteristics in the intersections
Traffic circle	• Higher engine braking effect before the traffic circle • Tensile force reserve before entry • Optimized shift characteristics in the traffic circle and in the exit

Shift example for a vehicle with and without ConnectedShift

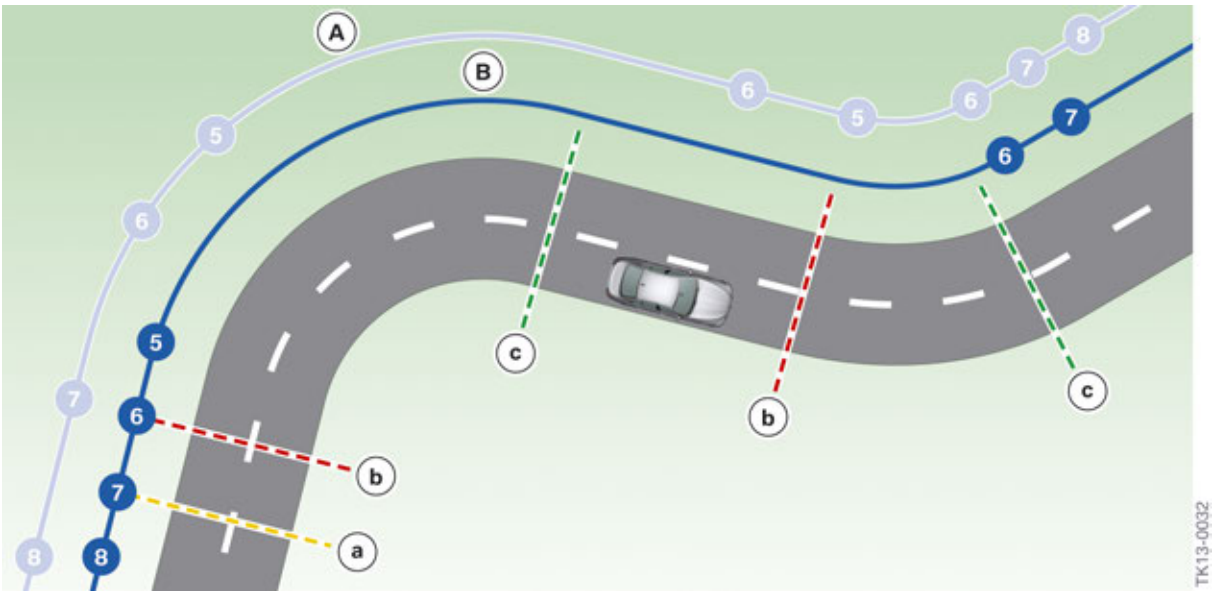

ConnectedShift shift example

Index	Explanation
A	Shift points without ConnectedShift
B	Shift points with ConnectedShift
a	Taking the foot off the gas (coasting (overrun) mode)
b	Slight brake control
c	Accelerator pedal is operated

ConnectedShift can select downshifts before curves and avoid up and down shifts between consecutive curves. A higher engine braking effect before a curve is achieved, as well as a reduction of the shift frequency in curves and optimal exiting from the curves.

7.8.2. Use of radar

The radar-based ConnectedShift is new and available for the first time in a BMW vehicle.

A prerequisite for use of this function is equipment with front and rear radar systems. The following table provides information on the vehicle equipment in which a radar system is used.

equipment version	Front radar, center	Front radar, side	Rear radar
Standard version	—	—	—
Driving Assistant (5AS)	—	—	2
Active Driving Assistant Plus includes ACC Stop and Go (5AT)	1	2	2

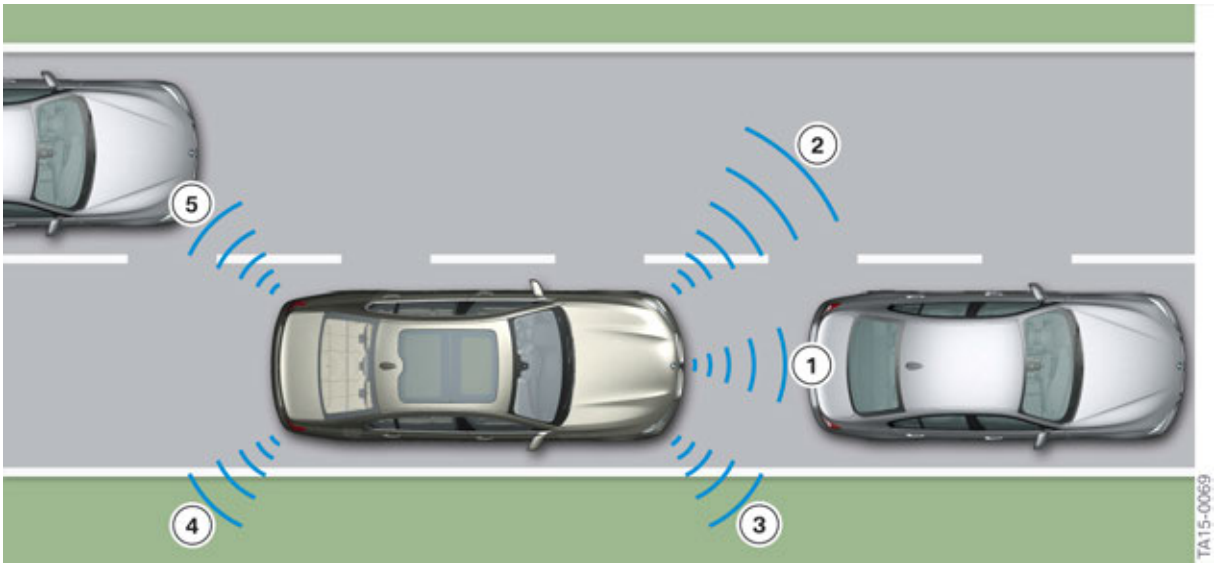

Radar-based ConnectedShift in the G12

Index	Explanation
1	Front radar, center
2	Front radar, side left
3	Front radar, side right
4	Rear radar, side right
5	Rear radar, side left

If a vehicle detects rapid approach to an obstacle via the front radar, the electronic transmission control (EGS) automatically shifts down to a lower gear.

The lower gear offers the driver the following advantages:

- The higher engine braking torque reduces the driving speed if the driver is not trying to overtake.
- If an overtaking manoeuvre is about to take place, the driver has a higher tractive power reserve of the engine available.

In addition to the front radar, the system also uses the side radar, e.g. in order to make it easier to feed into flowing traffic thanks to an optimum gear selection.

7.8.3. Characteristics and availability

In SPORT and COMFORT modes the characteristics of ConnectedShift are adapted to the respective driving program, in ECO PRO mode ConnectedShift is not available. ConnectedShift is also not available during control operation of cruise control.

A prerequisite is that the navigation map data and the required additional information for the country are available. This is dependent on the navigation map provider and is not available worldwide for all countries.

A prerequisite for radar-based ConnectedShift is the optional equipment Active Driving Assistant Plus (5AT).

7.9. New functions

7.9.1. Transmission behavior when driving off

When the vehicle is at standstill with the brake pedal pressed and the selected drive position, a defined converter slip of the automatic transmission is **not** set as previously. Instead, the clutch remains completely open for selection of a gear (release at standstill). When the brake is released after vehicle standstill, the vehicle does **not** crawl (rolling away possible). Crawling can be activated on request by pressing the accelerator pedal. The crawl function is cancelled again only when the vehicle is once more at standstill.

7.9.2. Stepped Sport shift mode

A new feature in the G12 is an additional sport shift map which offers the driver a further configuration option between "D" (Drive) and "S" (Sport) drive positions.

Activation of the additional Sport shift map D + FES Sport in the G12

Index	Explanation
1	Personalization menu on the Central Information Display (CID)
2	Configuration of automatic transmission in Sport mode
3	Gear selector switch in D (Drive)
4	Driving experience switch in Sport mode

With previous automatic transmissions, it was possible to change to Sport mode for a sporty driving style only by means of the gear selector switch.

In the G12, there is an additional stepped Sport shift mode, which can be activated as follows:

- Gear selector switch in D position (Drive)
- Driving experience switch in Sport

In stepped Sport shift mode, upshifts take place later and downshifts earlier than in D (Drive) mode. However, the shift points are not at the same level as for pure Sport mode (gear selector switch in S).

The stepped Sport shift mode can be activated or deactivated by means of the personalization menu on the Central Information Display (CID).

This additional configuration option allows the driver to adapt the vehicle to his gearshift wishes more exactly.

7.10. Transmission emergency release

Transmission emergency release:

1 Mechanical transmission emergency release.
2 Electronic transmission emergency release.

7.10.1. Mechanical transmission emergency release

The mechanical transmission emergency release has also been modified. For this purpose the parking lock lever must be secured using a new special tool (order number 83 30 2 355 850) in the position pictured below.

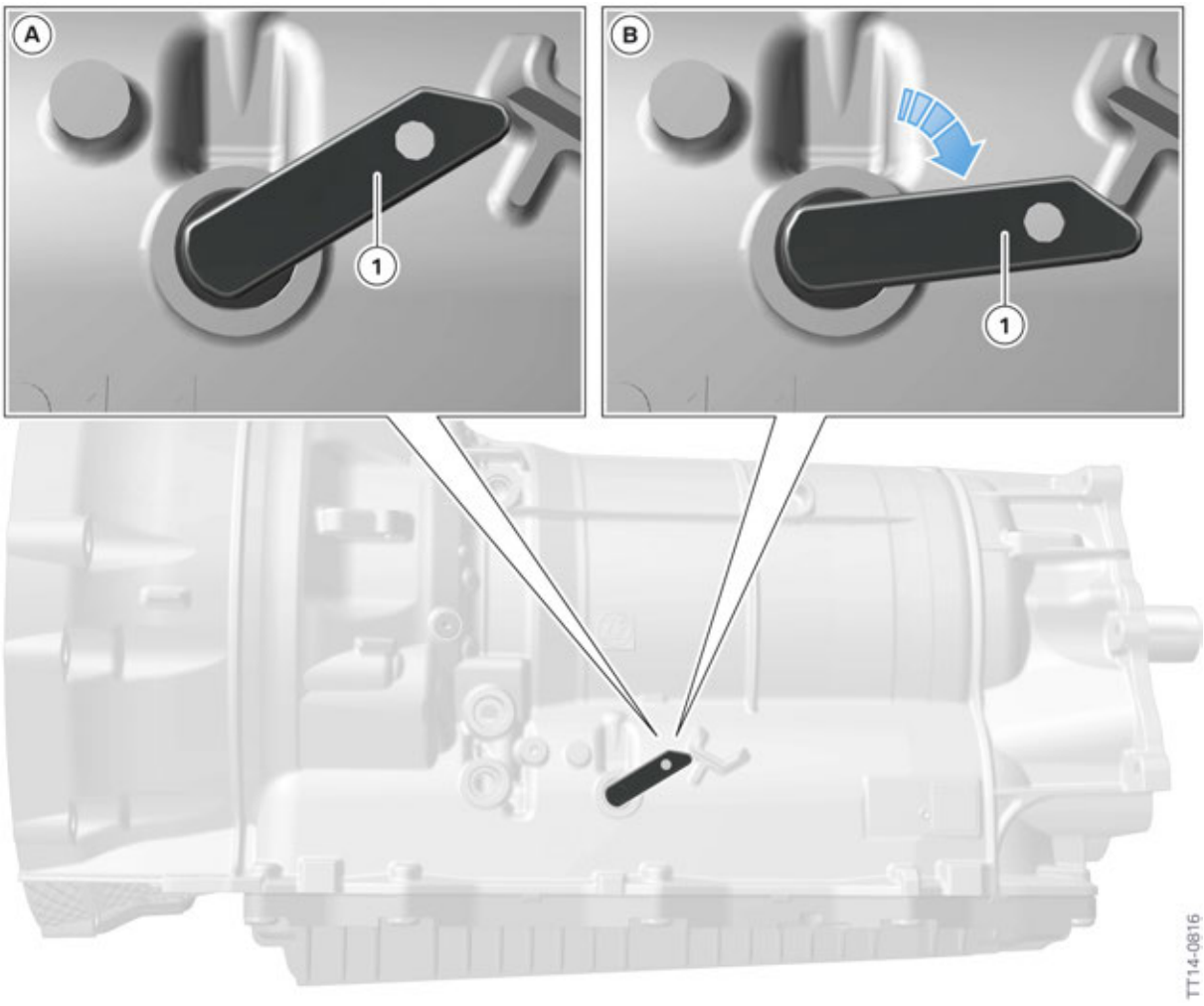

F23 mechanical transmission emergency releaseGA8HP50Z

Index	Explanation
A	Transmission parking lock engaged
B	Transmission parking lock released
1	Parking lock lever

The mechanical transmission emergency release may only be operated by trained Service personnel. The vehicle must be secured to prevent it from rolling away during emergency release.

7.10.2. Electronic transmission emergency release

Operation of the electronic transmission emergency release was simplified in the G12. The required conditions and procedure are explained in more detail below.

Electronic transmission emergency release is possible only when the engine does not start but the starter motor turns.

The electronic transmission emergency release is active for 30 minutes. Wheel speed signals due to movement of the vehicle do not have any influence on the predefined period, but they prevent the parking lock from being engaged as long as they are transmitted. If a vehicle is moved shortly before expiry of the 30 minutes, for example, the parking lock will be engaged only when the vehicle comes to a standstill again. The time specified is also dependent on the battery capacity. Time-independent activation of the parking lock takes place if the battery voltage falls below defined voltage thresholds.

The vehicle must be secured to prevent it from rolling away before performing electronic transmission emergency release!

G12 Powertrain

7. Automatic Transmission

Electronic transmission emergency release in the G12

Index	Explanation
1	Press brake pedal and hold down during the procedure.
2	Press start/stop button and hold down during the procedure.
3	Press release button at electronic gear selector switch.
4	Press and hold down release button, move the gear selector switch to N position and hold in this position for approx. 5 seconds.
5	As soon as N (neutral) has been engaged in the transmission, a Check Control message will appear in the instrument cluster.
6	The brake pedal, start/stop button, gear selector switch and release button can be released.

The following conditions can prevent or impede electrical transmission emergency release:

- If the vehicle is on an incline (tensioning in the drive train).
- At very high or low transmission oil temperatures (modified viscosity).

The vehicle is only capable of manoeuvring and **cannot** be towed after successful electronic transmission emergency release.

Detailed information on the electronic transmission emergency release is provided in the corresponding repair instructions and in the Owner's Handbook.

7.11. Towing

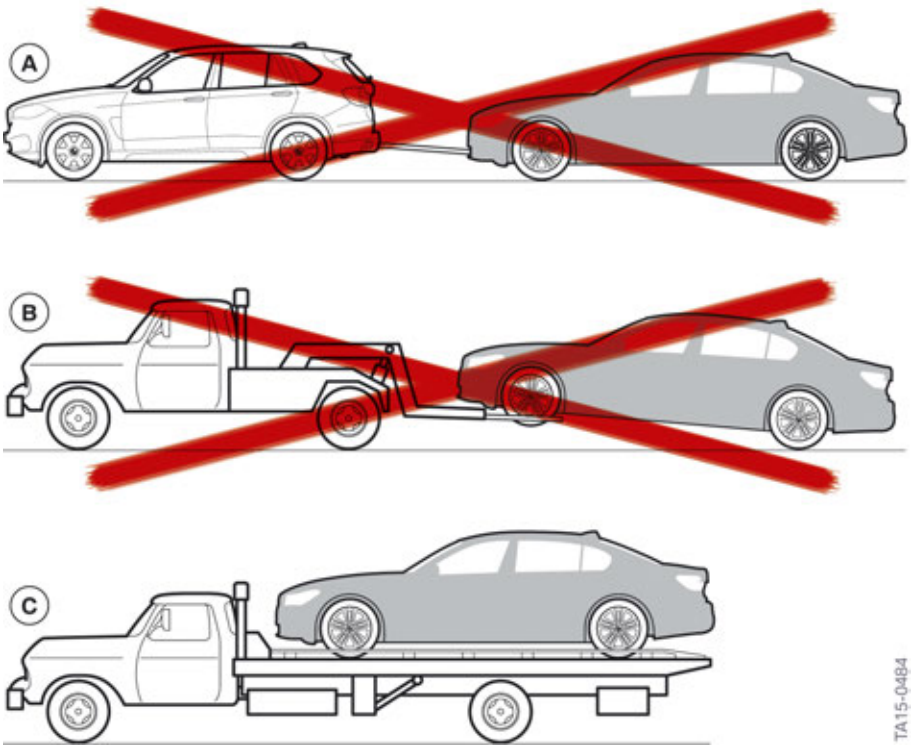

Towing the G12

Index	Explanation
A	Towing on both vehicle axles
B	Towing on the rear vehicle axle
C	Recovery on a transport deck

7. Automatic Transmission

Towing of the automatic transmission on the driven vehicle axle is **not** permitted. Limited time and speed-dependent towing would not technically damage the automatic transmission, but permanent release of the parking lock cannot be guaranteed due to the changed mechanical and electronic transmission emergency release. Sudden engagement of the parking lock during a towing operation on the driven vehicle axle can lead to damage to the vehicle and to serious accidents.

7.12. System wiring diagram

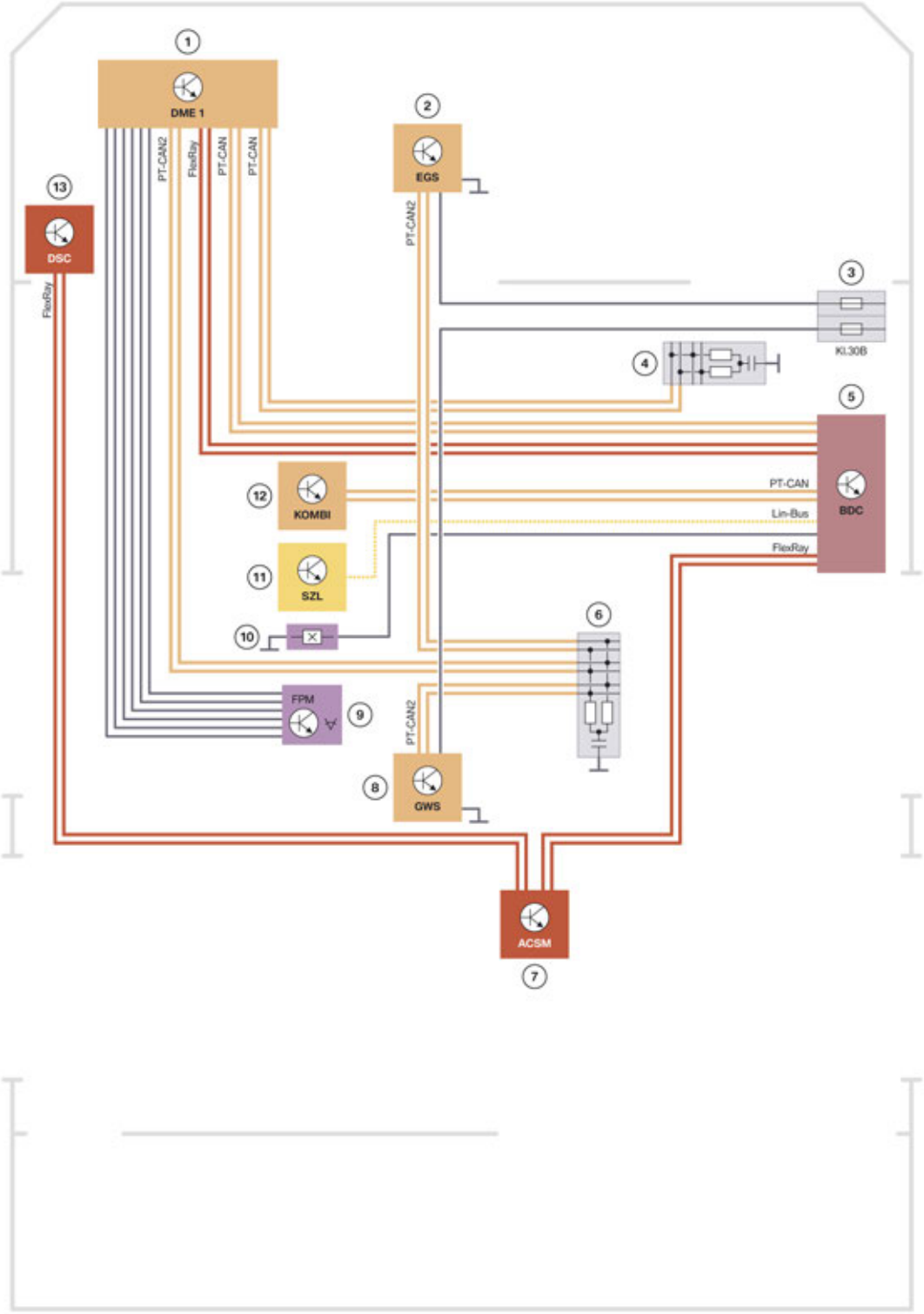

System wiring diagram of electronic transmission control EGS in the G12

G12 Powertrain
7. Automatic Transmission

Index	Explanation
1	Engine control unit (DME)
2	Electronic transmission control (EGS)
3	Power distribution box, front right
4	CAN terminator 4
5	Body Domain Controller (BDC)
6	CAN terminator 5
7	Advanced Crash Safety Module (ACSM)
8	Gear selector switch (GWS)
9	Accelerator pedal module
10	Brake light switch
11	Steering column switch cluster
12	Instrument panel (KOMBI)
13	Dynamic Stability Control (DSC)

G12 Powertrain

8. Four-Wheel Drive

8.1. Overview of all-wheel drive systems

The all-wheel drive variants used at BMW differ with respect to the different drive platforms. Although the all-wheel drive system of the front-wheel drive-based vehicles such as the X1 F48 differs from that of the rear-wheel drive-based vehicles, both all-wheel drive systems are referred to as xDrive at BMW.

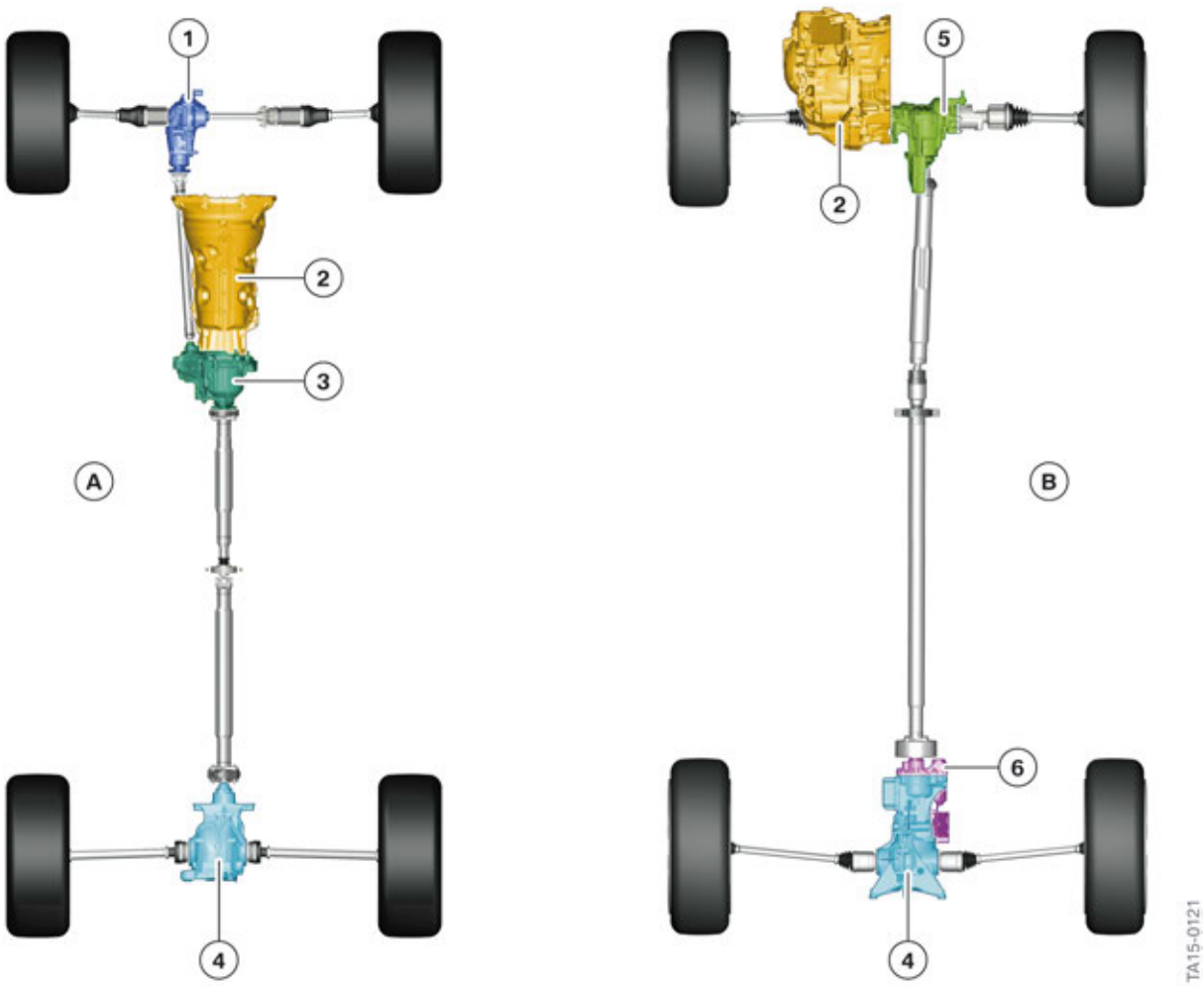

Overview of all-wheel drive systems in the different series

Index	Explanation
A	Rear-wheel drive-based xDrive
B	Front-wheel drive-based xDrive
1	Front axle differential
2	Manual gearbox or automatic transmission
3	Transfer box
4	Rear axle final drive
5	Bevel gears
6	Longitudinal torque distribution (integrated in the rear axle differential)

G12 Powertrain

8. Four-Wheel Drive

A rear-wheel drive-based xDrive is used in the G12.

The following table provides an overview of the different transfer boxes used at BMW.

User	VTG 2006 – 2009	Technical data
E6x E9x		ATC300 – Power transmission by spur gear set – Use in saloons and X1 – Weight with oil 25.2 kg – Multidisc clutch up to 1400 Nm – Torque buildup 0 ~ 1000 Nm in < 125 ms – Torque reduction 1000 ~ 50 Nm in < 100 ms – Starting current 30 A/holding current 5 – 6 A
E83		ATC400 – Power transmission by chain – Use in X vehicles apart from X1 – Weight with oil 24.2 kg – Multidisc clutch up to 1400 Nm – Torque buildup 0 ~ 1000 Nm in < 125 ms – Torque reduction 1000 ~ 50 Nm in < 100 ms – Starting current 30 A/holding current 5 – 6 A
E70		ATC700 – Power transmission by chain – Use in X vehicles apart from X1 – Weight with oil 24.5 kg – Multidisc clutch up to 1600 Nm – Torque buildup 0 ~ 1000 Nm in < 125 ms – Torque reduction 1000 ~ 50 Nm in < 100 ms – Starting current 30 A/holding current 5 – 6 A

G12 Powertrain

8. Four-Wheel Drive

Use	VTG 2009 – 2011	Technical data
E84		ATC350 – Power transmission by spur gear set without oil pump – Use in saloons and X1 – Weight with oil 23.9 kg – Multidisc clutch up to 1400 Nm – Torque buildup 0 ~ 1000 Nm in < 125 ms – Torque reduction 1000 ~ 50 Nm in < 100 ms – Starting current 30 A/holding current 5 – 6 A
F25		ATC450 – Power transmission by chain without oil pump – Use in X vehicles apart from X1 – Weight with oil 21.2 kg – Multidisc clutch up to 1400 Nm – Torque buildup 0 ~ 1000 Nm in < 125 ms – Torque reduction 1000 ~ 50 Nm in < 100 ms – Starting current 30 A/holding current 5 – 6 A

Use	VTG Light since 2011	Technical data
E84		ATC350L – Power transmission by spur gear set – Use in saloons and X1 – Weight with oil 22.6 kg – Multidisc clutch up to 1100 Nm – Torque buildup 0 ~ 1000 Nm in < 125 ms – Torque reduction 1000 ~ 50 Nm in < 100 ms – Starting current 30 A/holding current 5 – 6 A
F25		ATC450L – Power transmission by chain – Use in X vehicles apart from X1 – Weight with oil 19.5 kg – Multidisc clutch up to 1100 Nm – Torque buildup 0 ~ 1000 Nm in < 125 ms – Torque reduction 1000 ~ 50 Nm in < 100 ms – Starting current 30 A/holding current 5 – 6 A

G12 Powertrain

8. Four-Wheel Drive

Use	VTG from 2015	Technical data
G12		ATC13–1 – Power transmission by chain – Use of standard transfer box (all models) – Multidisc clutch up to 1300 Nm

8.2. New features in xDrive

The optional all-wheel drive of the G12 does not differ visually from the rear-wheel drive-based xDrive systems currently used.

However, the xDrive of the G12 offers the following new features:

- The maximum transferable torque to 1300 Nm.
- Reduction in the thermal load by over-opening of the all-wheel drive multidisc clutches.
- Reduced fuel consumption by intelligent all-wheel drive control and demand-based oil level control in the transfer box (Efficiency Mode).

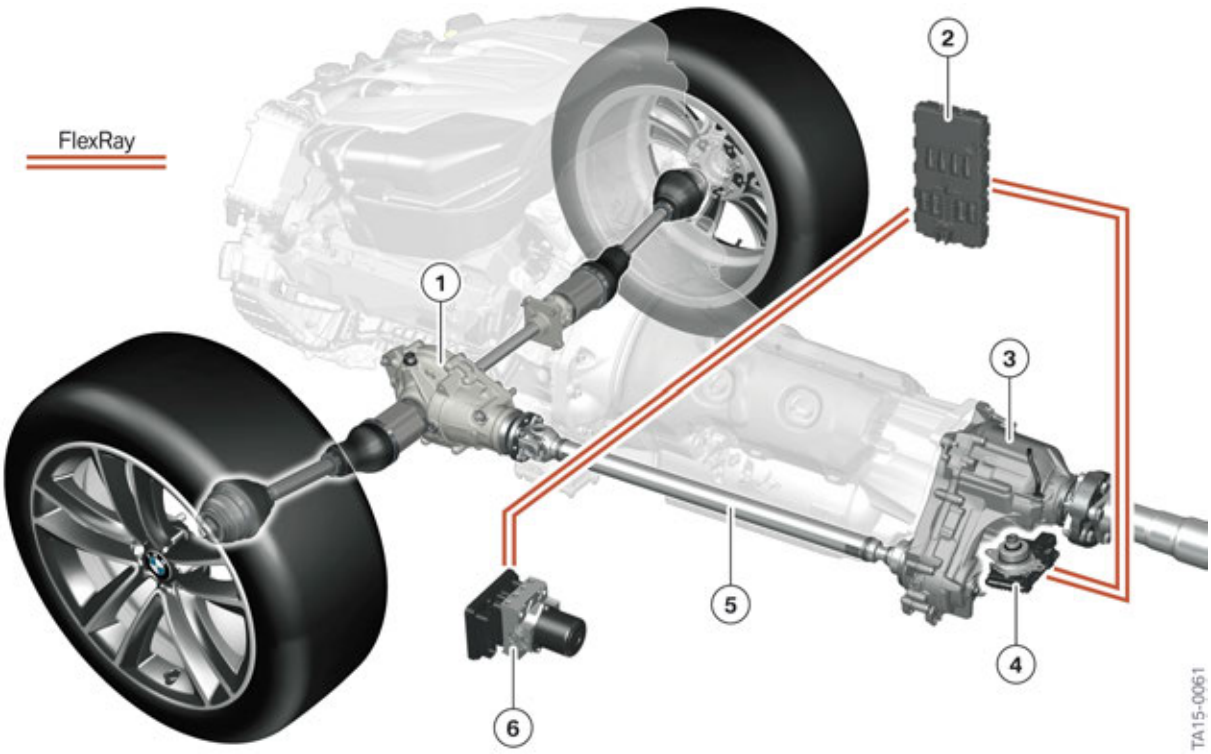

System overview of xDrive in the G12

G12 Powertrain

8. Four-Wheel Drive

Index	Explanation
1	Front axle differential
2	Body Domain Controller (BDC)
3	Transfer box
4	VTG control unit
5	Front drive shaft
6	Dynamic Stability Control (DSC)
FlexRay	FlexRay bus

The torque generated by the engine is stepped up in the automatic transmission and is supplied via the transmission output shaft to the transfer box. The downstream transfer box in the drive train has the task of variably distributing the torque to the front and rear axles depending on the driving situation. Since a rigid connection of the rear axle with the front axle is not possible due to possible differences in the wheel speeds, there is a multidisc clutch inside the transfer case. The multidisc clutch performs the task of variable torque distribution between the two drive axles.

8.3. Functional description of xDrive

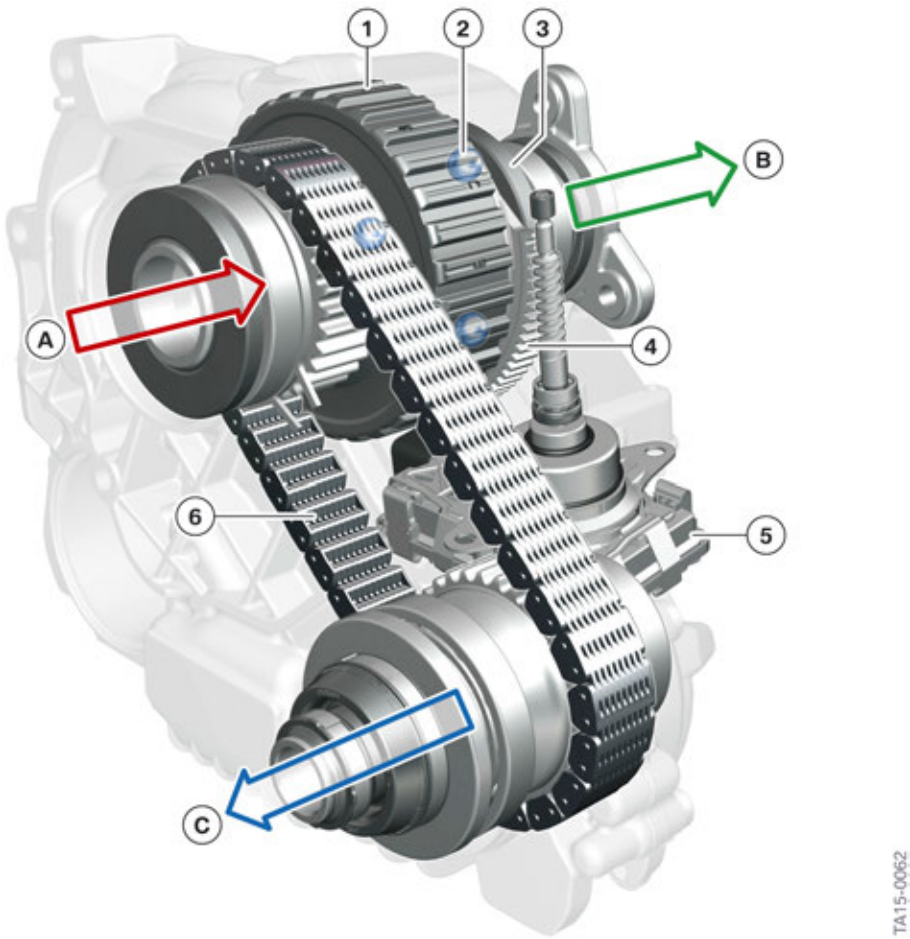

Transfer box in the G12

Index	Explanation
A	Drive from automatic transmission
B	Output to rear axle
C	Output to front axle
1	Multi-plate clutch
2	Balls (3 pieces)
3	Ball ramp
4	Toothed adjusting ring
5	VTG control unit
6	Chain

G12 Powertrain

8. Four-Wheel Drive

The multidisc clutch in the all-wheel drive transfer box allows the torque to be distributed to both axles within certain limits. Seen statistically, the torque distribution between the front and rear axles on the current BMW all-wheel drive vehicles is 40:60. In the G12, the torque distribution to the two drive axles was split equally in the direction of 50:50. In terms of dynamics, however, other important parameters such as different wheel slip values play a part. It is no longer possible to speak of a 50:50 torque distribution with different wheel slip values at the two drive axles. In this case, the drive torques are distributed variably in the range between theoretically 0:100 and 100:0 corresponding to the driving situation.

The entire torque is transmitted to the rear axle when the multidisc clutch is open. The multidisc clutch must be closed in order to transfer torque to the front axle.

The clutch torque to be transmitted is calculated in the Dynamic Stability Control (DSC) and is forwarded to the transfer box control unit via a FlexRay bus. The transfer box control unit calculates the angle to be set at the toothed adjusting ring from the requested clutch torque. The adjusting torque required for control is generated by an electric motor.

The contact pressure of the multidisc clutch is increased depending on the requested torque distributions. As a result, the stepped-up engine torque is seamlessly distributed between the two drive axles corresponding to the driving situation.

8.4. Efficiency Mode

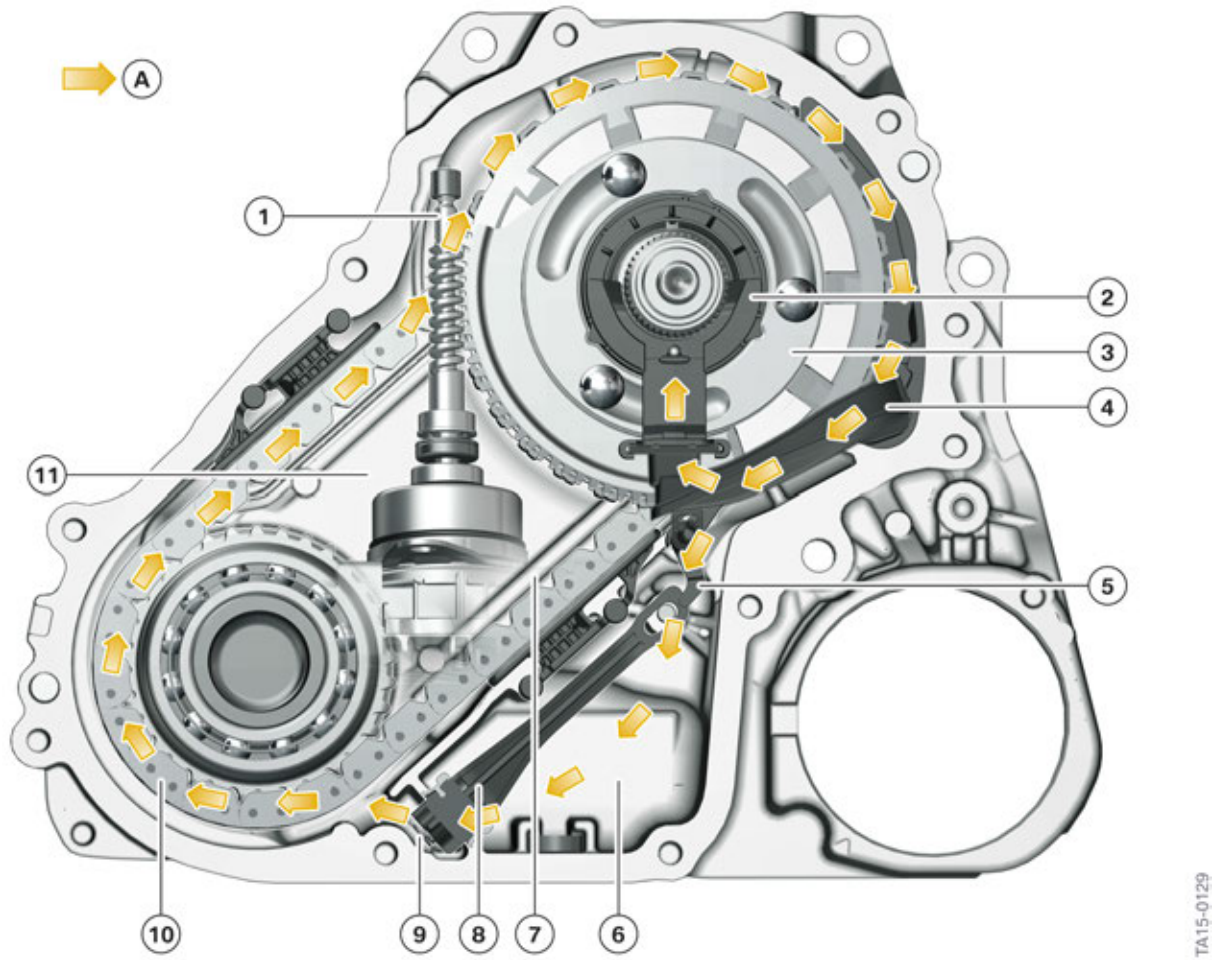

Efficiency mechanism of the xDrive in the G12

Index	Explanation
A	Oil circuit
1	Worm shaft
2	Oil stop (oil shutoff to the multidisc clutch)
3	Toothed adjusting ring
4	Oil line with reservoir
5	Switching shaft (actuation of oil reservoir)
6	Oil chamber 2
7	Overflow

Index	Explanation
8	Oil reservoir (barrier between the oil chambers)
9	Spring
10	Chain
11	Oil chamber 1

“Efficiency Mode” is a new development in the area of drag torque reduction and is designed to increase efficiency. The multidisc clutches of the transfer box are opened depending on the driving situation by intelligent control of the all-wheel drive system. This permits reduction of the lubrication in the transfer box. A distinction is made between the following functions:

- Oil stop
- Oil reservoir

Both of these functions are described in more detail below. Both functions have the task of minimizing losses in the transfer box. They are always activated in parallel, but act in different areas of the unit.

Efficiency Mode is always used when there is **no** all-wheel drive request from the DSC control unit and the multidisc clutch is therefore open.

8.4.1. Oil stop

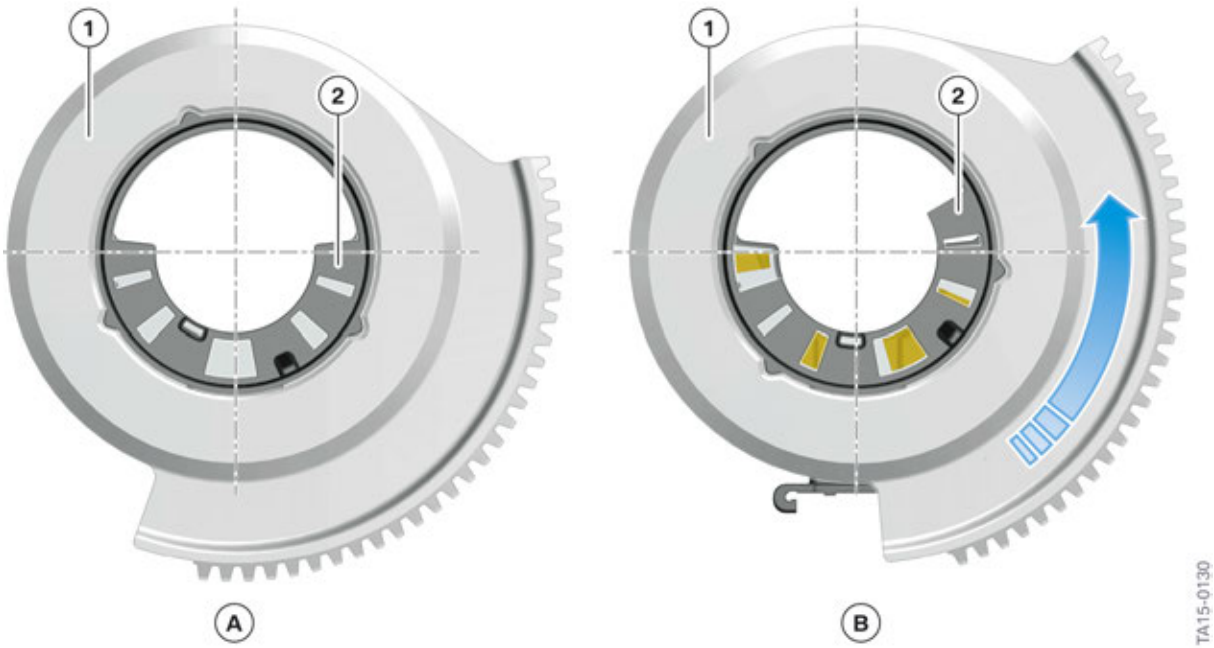

Oil stop function of the xDrive in the G12

Index	Explanation
A	Oil stop active (closed)
B	Oil stop inactive (open)
1	Toothed adjusting ring
2	Oil flow closure system

The oil stop function of the xDrive transfer box offers the following advantages:

- Reduction in the engine drag torques when the multidisc clutch is open.
- Fast availability of lubrication oil for the multidisc clutch thanks to small oil reservoir directly in front of the disc set.

The oil supply to the clutch pack is blocked when the multidisc clutch is open. The oil is stored in the line and in the oil reservoir. The toothed adjusting ring is rotated by means of the worm shaft in order to activate and deactivate the oil stop. The oil flow to the multidisc clutch is interrupted by rotation of the adjusting ring. In the event of a torque request to the transfer box (multidisc clutch is closed), the oil supply is opened again due to rotation of the adjusting ring and the multidisc clutch is lubricated and cooled.

The lower oil fill level means that churning losses, which are caused by immersion of the rotated multidisc clutch, are eliminated. This reduces fuel consumption as well as wear on the multidisc clutch.

8.4.2. Oil reservoir

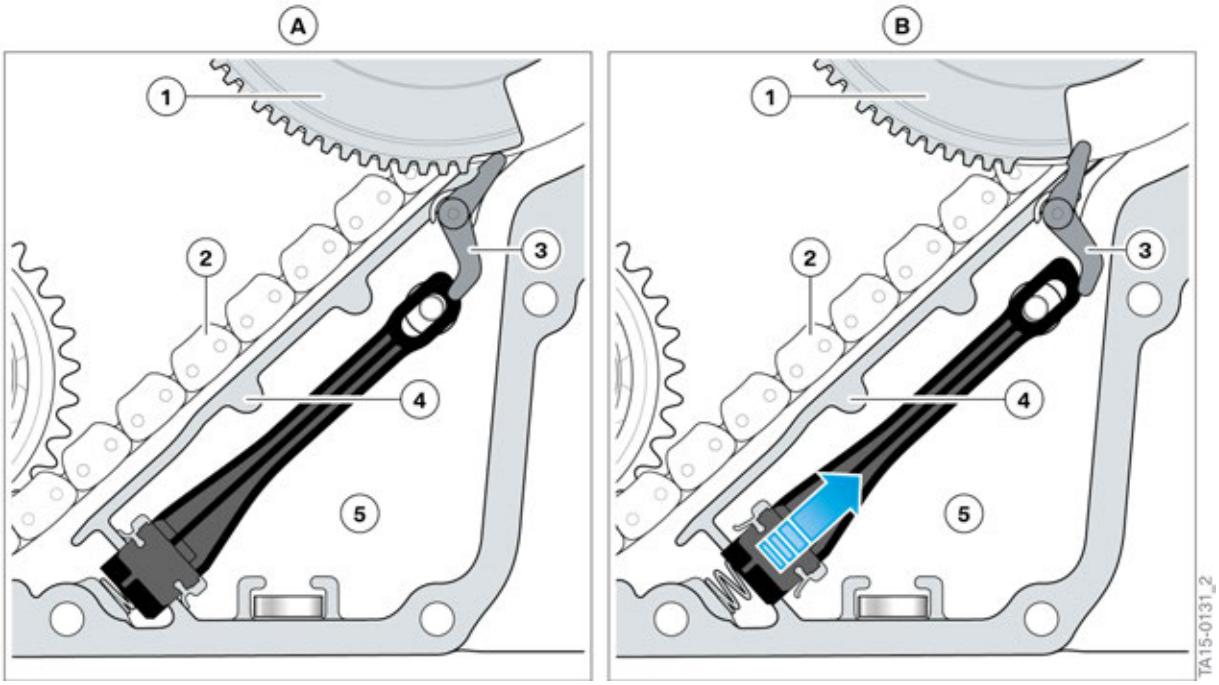

Oil reservoir function of the xDrive in the G12

Index	Explanation
A	Oil reservoir closed
B	Oil reservoir open
1	Toothed adjusting ring
2	Chain
3	Switching shaft (actuation of oil reservoir)
4	Oil reservoir (barrier between the oil chambers)
5	Oil chamber 2

The oil reservoir is closed when no torque request is made to the transfer box (multidisc clutch is open). The oil reservoir has the task of storing the oil in a defined space (oil chamber 2). The oil reservoir function is done by a lever system which is supported in the housing and which closes a defined opening by means of an elastomer seal.

A switching shaft, which is moved by the toothed adjusting ring, actuates the oil reservoir and keeps it in the designated position. The oil chambers are closed off with respect to each other, reducing churning losses to a minimum. A defined quantity of oil always remains in circulation in order to guarantee lubrication of bearings and sealing rings. This is ensured by an overflow between the 1st and 2nd oil chambers.

8.5. Operating strategy

The all-wheel drive (xDrive) was designed as an intelligent system in the G12. Intelligent control of the xDrive supports efficient and thus fuel-saving operation of the vehicle. However, the all-wheel drive is not switched off or deactivated, for example, but is adapted corresponding to the current driving situation. A large number of different sensors supply information about the current traction requirement. The drive torque is distributed to the different drive wheels as required corresponding to the traction and driving dynamics.

Operating strategy of the xDrive in the G12

G12 Powertrain
8. Four-Wheel Drive

Index	Explanation
A	Wet conditions
B	Snow
C	Asphalt
D	Off-road
E	xDrive

In many driving situations the all-wheel drive multidisc clutch is open and only the rear wheels are driven. Only in certain driving situations is some of the drive torque also transmitted to the front wheels. The distribution of the drive torque takes place proactively. Calculation of the required distribution takes place in the control unit for Dynamic Stability Control (DSC).

The DSC takes into account the following criteria for calculation of the torque distribution:

- Vehicle speed
- Lateral and longitudinal acceleration
- Yaw rate
- Brake control (ABS)
- Steering angle
- Wheel speeds
- Vehicle longitudinal inclination
- Pedal sensor position
- Driving program (SPORT, COMFORT, ECO PRO)
- DSC status (DSC activated/deactivated, DTC activated/deactivated)

Depending on the driving situation, some of the drive torque is transmitted to the front wheels. The exact ratio of the torque distribution is dependent on the activation of the multidisc clutch, as well as the slip of the wheels. Some of the influencing factors are listed below.

The all-wheel drive clutch torque is increased in the following driving situations if there are no other criteria present that prevent this:

- Road speed < 20 kph / <12 mph
- Driving program SPORT activated
- Dynamic Stability Control (DSC) deactivated
- Dynamic Traction Control (DTC) activated
- Oversteering vehicle
- Increased difference in speed between front and rear wheels
- Large vehicle longitudinal inclination (e.g. on inclines)
- High accelerator pedal input, e.g. kick-down position
- Load reversal conditions such as transition to coasting overrun (driver takes his foot off the accelerator pedal)

The all-wheel drive clutch torque is reduced in the following driving situations if there are no other criteria present that prevent this:

- Driving speeds > 180 km/h / >111 mph
- Understeering vehicle
- With increasing steering angle (to avoid distortions in the drive train)
- Strong braking (ABS braking)

To assess the road condition and to ensure effective, proactive longitudinal torque distribution, the coefficients of friction between the tires and roadway are determined by the DSC control unit. The wheel slip as well as the longitudinal and lateral acceleration are evaluated for this purpose, for example.

If wheel speed information received by the Dynamic Stability Control (DSC) suggests different tire rolling circumferences of the wheels (e.g. in the case of tires with significant differences in the amount of wear), the all-wheel drive multidisc clutch is closed to a lesser extent than in the normal case. This prevents excessive distortion in the drive train, which would lead to high power losses of the xDrive.

8.5.1. Determination of the wheel slip

Wheel slip occurs on the wheels of the different axles both as a result of acceleration and deceleration. The wheel slip is determined using the sensor signals from all wheel speed sensors as well as an arithmetic model in the DSC control unit.

The wheel slip can be defined as follows:

- Wheel slip is the deviation of the wheel circumferential velocity from the driving speed.

If a wheel is accelerated or braked to such an extent that the maximum static friction force is exceeded, the slip then increases until the wheels spin or locks.

Two types of slip occur in practice.

- Traction slip
- Brake slip

Traction slip can be reduced by the following measures.

- DSC intervention by reduction of the engine torque.
- Increase in the clutch torque to be transmitted by the xDrive (torque distribution to both drive axles).

Brake slip can be reduced by the following measures.

- ABS control operation (Antilock Brake System).

In order to permit individual wheel control of the brake forces at a wheel during strong braking (ABS or DSC control operation) and avoid any influence on the other drive axle, the all-wheel drive clutch torque is decreased as required or completely reduced if necessary.

Calculation example for traction slip

- Wheel circumferential velocity = 16.67 m/s (corresponds to approx. 60 km/h / 37 mph)
- Driving speed = 13.89 m/s (corresponds to 50 km/h / 31 mph)

Since the wheel circumferential velocity is higher than the driving speed for the specified values, the slip here is so-called traction slip.

$$S_A = \frac{V_{Wheel} - V_{Vehicle}}{V_{Vehicle}}$$

TA15-0557

Formula for traction slip

Index	Explanation
SA	Traction slip
V Wheel	Wheel circumferential velocity
V Vehicle	Vehicle speed

SA = (16.67 m/s – 13.89 m/s) : 13.89 m/s = 0.2

SA in % = 0.2 · 100 % = 20 %

The traction slip is 20 %.

Calculation example for brake slip

- Wheel circumferential velocity = 11.12 m/s (corresponds to approx. 40 km/h / 25 mph)
- Driving speed = 13.89 m/s (corresponds to approx. 50 km/h / 31 mph)

Since the wheel circumferential velocity is lower than the driving speed for the specified values, the slip here is so-called brake slip.

$$S_B = \frac{V_{Wheel} - V_{Vehicle}}{V_{Vehicle}}$$

TA15-0558

Formula for brake slip

Index	Explanation
SB	Brake slip
V Wheel	Wheel circumferential velocity
V Vehicle	Vehicle speed

SB = (11.12 m/s – 13.89 m/s) : 13.89 m/s = – 0.2

SB in % = – 0.2 · 100 % = – 20 %

The brake slip is 20 %.

xDrive operating strategy for different wheel slip values

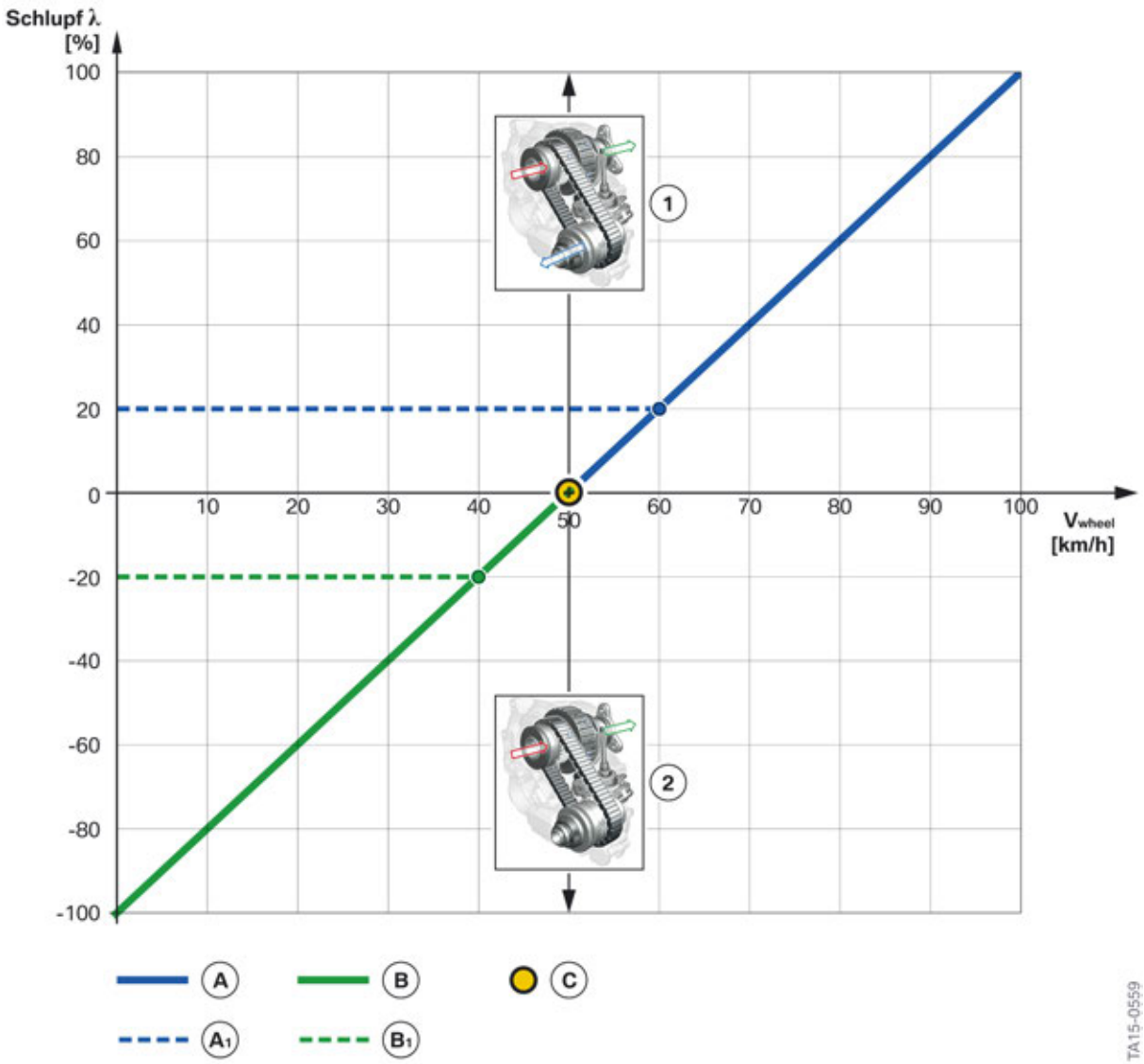

Wheel slip diagram with xDrive control

Index	Explanation
A	Wheel circumferential velocity (drive slip)
A1	20 % drive slip
B	Wheel circumferential velocity (brake slip)
B1	20 % brake slip
C	Driving speed (constant)

Index	Explanation
1	Multidisc clutch in the transfer box closed
2	Multidisc clutch in the transfer box open
Slip λ [%]	Wheel slip in [%]
V wheel in [km/h]	Wheel circumferential velocity in kilometers per hour

8.6. Notes for Service

- The vehicle must **not** be driven when the front drive shaft has been removed.
- When carrying out work on a brake test stand, it is not necessary to take into account any all-wheel drive-specific points.
  (roller mode for testing the brake system is detected automatically.)
- The vehicle must **not** be towed if only one axle is raised.
- The oil filling of the transfer box is designed for the entire unit service life. However, a fault code entry with an oil change recommendation for the transfer box oil is stored when a mileage of 150,000 km / 100,000 miles is exceeded. When refilling the transfer box oil, it is necessary to move the oil reservoir to the open position using the BMW diagnosis system ISTA.
- Various test plans are available in the BMW diagnosis system ISTA for Service.

⚠

The tire tread depth, tire rolling circumference as well as the tire manufacturer should be the same on the front and rear axles if possible, in order to ensure proper functioning of the xDrive. It is also recommended to use only tires that have been approved or recommended by BMW.

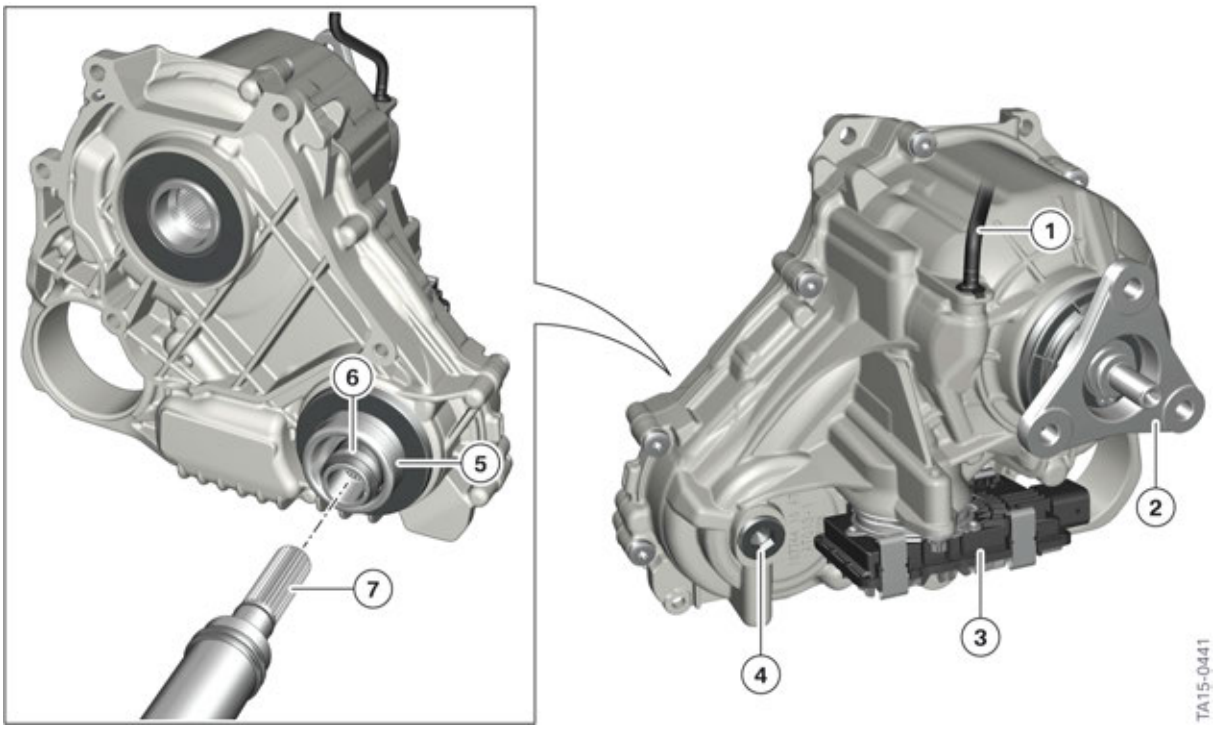

Transfer box of the G12

Index	Explanation
1	Transmission breather
2	Output, rear drive shaft
3	VTG control unit
4	Fluid filler plug
5	Dust boot
6	Output with joint to the front propeller shaft
7	Front drive shaft

The joint of the front drive shaft is located on the output inside the transfer box. This is beneficial for the small package dimensions of the transfer box. The component sharing concept with other vehicle series can also be ensured in this way.

The front drive shaft is inserted in the output with joint by means of a plug connection. A dust boot protects the connection against dirt.

Since the output with joint is no longer fixed when the front drive shaft is removed, the vehicle must no longer be driven in this condition. The lacking guide would lead to an uncontrolled movement of the output when the vehicle is accelerated, thus causing damage to the transfer box.

⚠

The vehicle must **not** be driven when the front drive shaft has been removed.

8.6.1. Oil change for transfer box

The oil filling of the transfer box is designed for the entire unit service life. This corresponds to a mileage of approximately 150,000 km / 100,000 miles. A fault code entry with an oil change recommendation for the transfer box is stored when this mileage is exceeded.

The transfer box does not have an oil drain plug. The oil filling to be renewed must be removed using an extractor unit.

The new transfer box oil can be filled using an oil filler plug.

In order to ensure that the entire oil filling has been exchanged, the oil reservoir must remain open for the duration of extraction and filling.

The Service employee can move the oil reservoir to the open position by means of the “Service function > Transfer box VTG > Oil change” in the BMW diagnosis system ISTA.

8.6.2. Classification of the transfer box

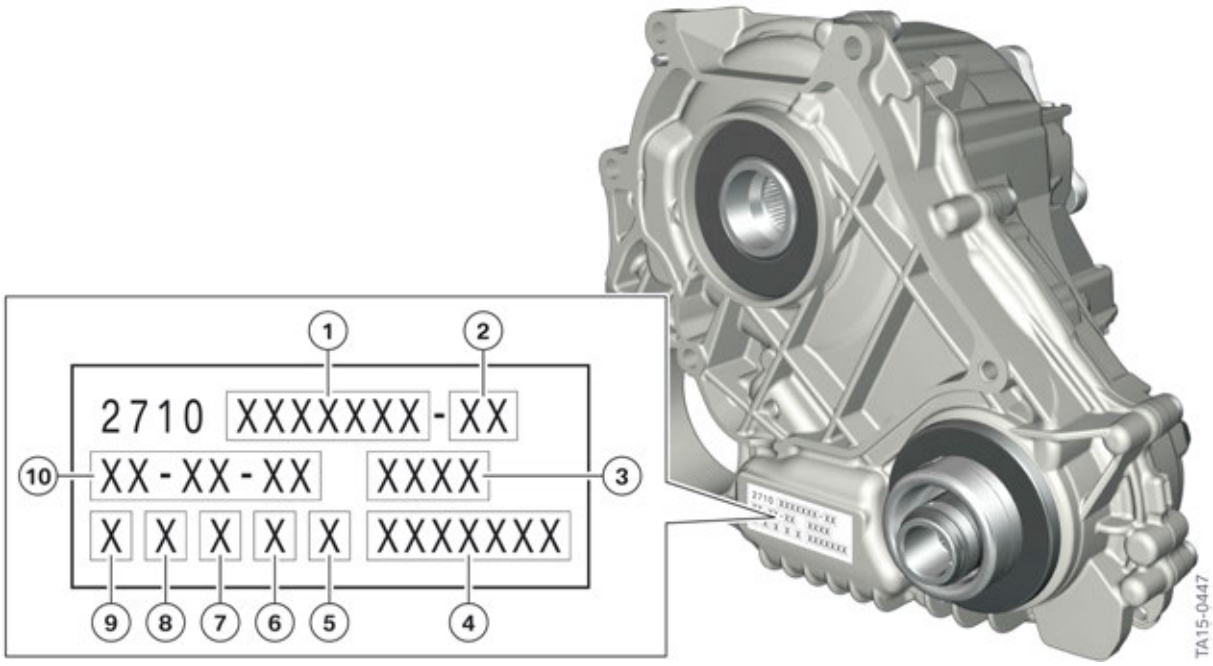

Classification of the transfer box in the G12

Index	Explanation
1	BMW part number
2	Revision index
3	Transfer box classification
4	Serial number

Index	Explanation
5	Housing type
6	Assembly line
7	Works (A = Austria, M = Mexico)
8	Output flange diameter (96 mm, 105 mm)
9	Versions
10	Production date

Due to the permitted component tolerances of the different components of the transfer box, the stroke of the ball ramp for closing the multidisc clutch in the transfer box differs in each case. However, these tolerances can be compensated by adapted control of the electric motor for closing the multidisc clutch. For this purpose, the tolerance class must be entered in the control unit for the transfer box.

The respective tolerance is determined during production and entered on a type plate on the transfer box (see graphic above).

The tolerance can be determined as follows in Service:

- Reading off the tolerance class on the type plate on the transfer box.
- Reading out the tolerance class via the BMW diagnosis system ISTA.

The four-digit classification code can be entered in the control unit for the transfer box VTG by means of a service function in BMW diagnosis system ISTA. This must be within a stored classification range in order to be accepted by the VTG control unit.

The following table shows the complete classification range of the transfer box in the G12.

	21	22	23	24	25	26	27	28	29	30	31	32	33	34	35	36	37	38	39	40	41
21	3013	3024	3035	3046	3057	3068	3079	3080	3091	3100	3111	3122	3133	3144	3155	3166	3177	3188	3199	3208	3219
22	3220	3231	3242	3253	3264	3275	3286	3297	3306	3317	3328	3339	3340	3351	3362	3373	3384	3395	3404	3415	3446
23	3437	3448	3459	3460	3471	3482	3493	3502	3513	3524	3535	3546	3557	3568	3579	3580	3591	3600	3611	3622	3633
24	3644	3655	3666	3677	3688	3699	3708	3719	3720	3731	3742	3753	3764	3775	3786	3797	3806	3817	3828	3839	3840
25	3851	3862	3873	3884	3895	3904	3915	3926	3937	3948	3959	3960	3971	3982	3993	4006	4017	4028	4039	4040	4051
26	4062	4073	4084	4095	4104	4115	4126	4137	4148	4159	4160	4171	4182	4193	4202	4213	4224	4235	4246	4257	4268
27	4279	4280	4291	4300	4311	4322	4333	4344	4355	4366	4377	4388	4399	4408	4419	4420	4431	4442	4453	4464	4475
28	4486	4497	4506	4517	4528	4539	4540	4551	4562	4573	4584	4595	4604	4615	4626	4637	4648	4659	4660	4671	4682
29	4693	4702	4713	4724	4735	4746	4757	4768	4779	4780	4791	4800	4811	4822	4833	4844	4855	4866	4877	4888	4899
30	4908	4919	4920	4931	4942	4953	4964	4975	4986	4997	5000	5011	5022	5033	5044	5055	5066	5077	5088	5099	5108
31	5119	5120	5131	5142	5153	5164	5175	5186	5197	5206	5217	5228	5239	5240	5251	5262	5273	5284	5295	5304	5315
32	5326	5337	5348	5359	5360	5371	5382	5393	5402	5413	5424	5435	5446	5457	5468	5479	5480	5491	5500	5511	5522
33	5533	5544	5555	5566	5577	5588	5599	5608	5619	5620	5631	5642	5653	5664	5675	5686	5697	5706	5717	5728	5739
34	5740	5751	5762	5773	5784	5795	5804	5815	5826	5837	5848	5859	5860	5871	5882	5893	5902	5913	5924	5935	5946
35	5957	5968	5979	5980	5991	6004	6015	6026	6037	6048	6059	6060	6071	6082	6093	6102	6113	6124	6135	6146	6157
36	6168	6179	6180	6191	6200	6211	6222	6233	6244	6255	6266	6277	6288	6299	6308	6319	6320	6331	6342	6353	6364
37	6375	6386	6397	6406	6417	6428	6439	6440	6451	6462	6473	6484	6495	6504	6515	6526	6537	6548	6559	6560	6571
38	6582	6593	6602	6613	6624	6635	6646	6657	6668	6679	6680	6691	6700	6711	6722	6733	6744	6755	6766	6777	6788
39	6799	6808	6819	6820	6831	6842	6853	6875	6875	6886	6897	6906	6917	6928	6939	6940	6951	6962	6973	6984	6995
40	7008	7019	7020	7031	7042	7053	7064	7075	7086	7097	7106	7117	7128	7139	7140	7151	7162	7173	7184	7195	7204
41	7215	7226	7237	7248	7259	7260	7271	7282	7293	7302	7313	7324	7335	7346	7357	7368	7379	7380	7391	7400	7411

A

B

TA15-0448

Classification table for transfer box in the G12

Index	Explanation
A	Offset classes in [°]
B	Pitch classes in [%]

The tolerance class must be entered in the VTG control unit after the following service work:

- VTG control unit was renewed.
- Transfer box was renewed.

8.7. System wiring diagram

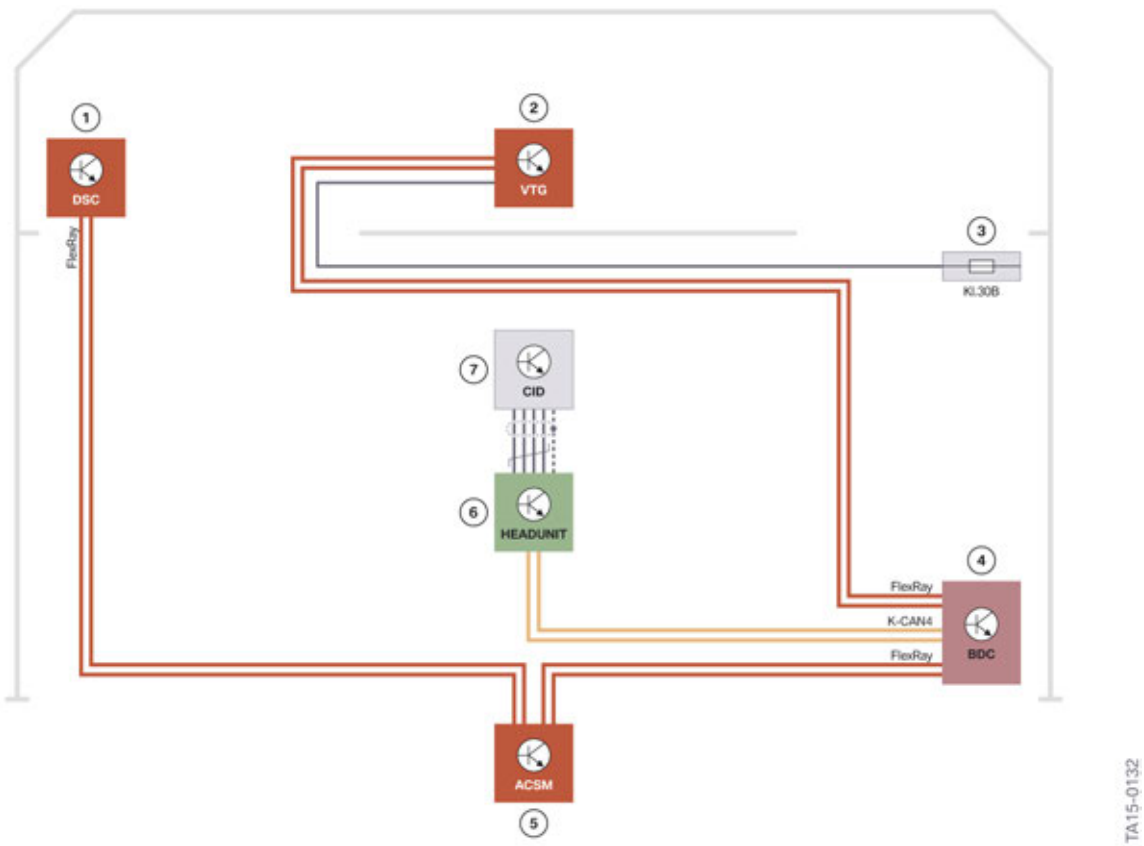

System wiring diagram for xDrive in the G12

Index	Explanation
1	Dynamic Stability Control (DSC)
2	VTG control unit
3	Power distribution box, front right
4	Body Domain Controller (BDC)
5	Advanced Crash Safety Module (ACSM)

Index	Explanation
6	Head Unit
7	Central Information Display (CID)
FlexRay	FlexRay bus
K-CAN4	Body CAN4

G12 Powertrain

9. Drive Shafts and Differential

9.1. Four-wheel drive

9.1.1. xDrive drive shaft

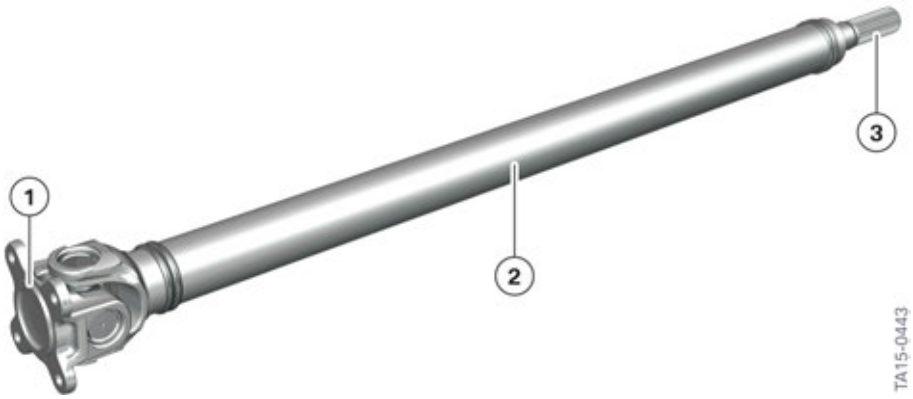

Drive shaft of the all-wheel drive in the G12

Index	Explanation
1	Universal joint (on the front axle differential)
2	Tubular shaft of drive shaft
3	Plug connection at transfer box

9.1.2. xDrive front axle differential

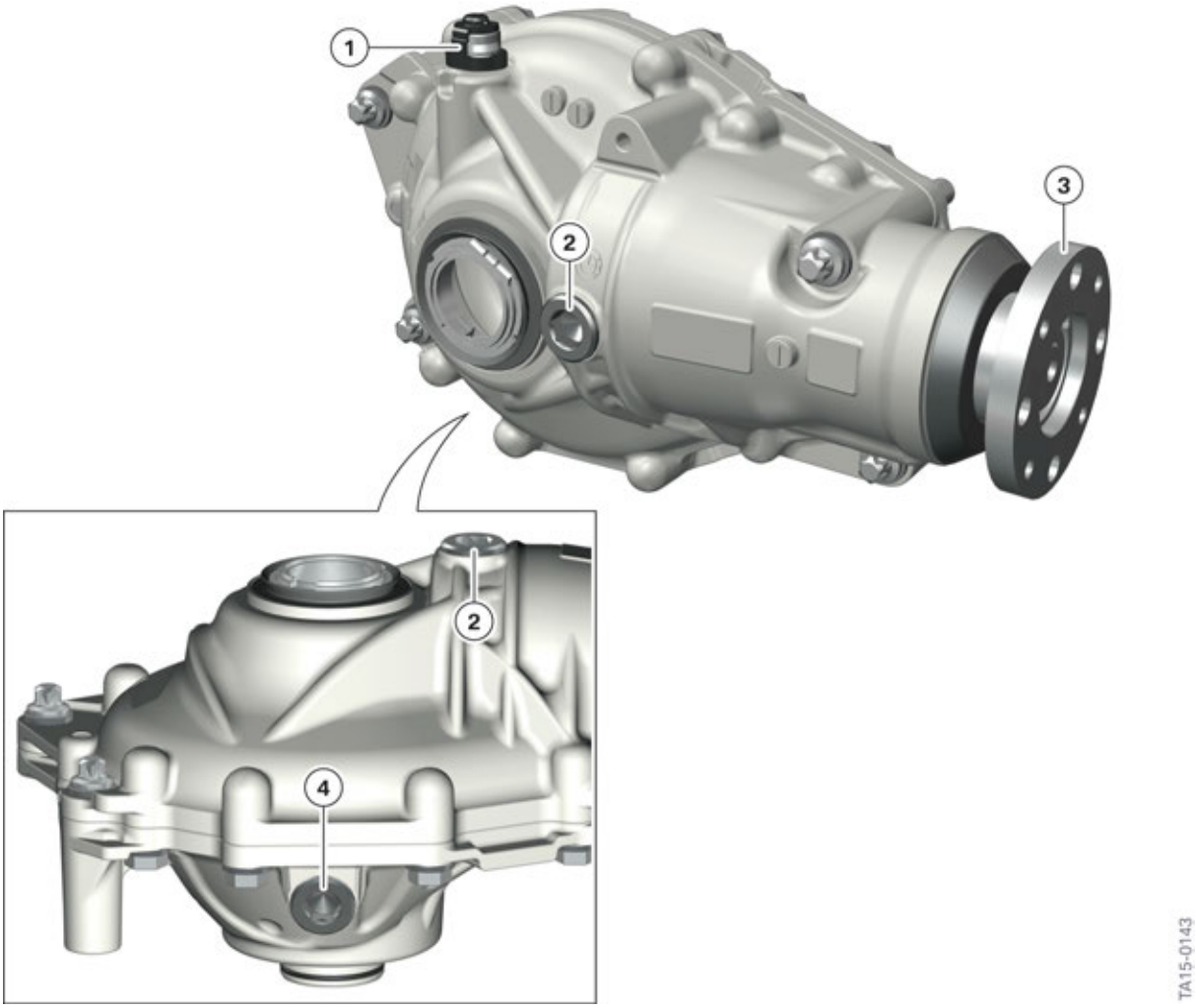

Front axle differential of the xDrive drive in the G12

Index	Explanation
1	Differential breather
2	Differential oil filler screw
3	Differential drive flange
4	Differential oil drain plug

A new Differential oil is used in order to increase the efficiency of the drive train.

For the initial filling at the plant, the front axle differential is filled with the following oil:

- Fuchs Titan EG3846.

However, when the oil is topped up by BMW Service, the following oil is used as before:

- Castrol SAF-XO.

Both oils are compatible with each other and can be topped off. The oil of the front axle differential is not subject to a service interval and can be used for the entire vehicle lifecycle.

Technical data

Technical data	Front axle differential 170AL	Front axle differential 175AL
In-line engine	X	—
V-engine	—	X
Oil volume	0.6 L	0.6 L
Oil grade at plant	Fuchs Titan EG3846	Fuchs Titan EG3846
Oil grade in BMW Service	Castrol SAF-XO	Castrol SAF-XO
Maximum input torque	1300Nm	1300Nm
Possible ratios	2.56/2.81/3.08/3.23	2.81
Weight including oil filling	13.5 kg / 33.7 lbs	14.5 kg / 32.0 lbs

9.1.3. Front output shafts of xDrive

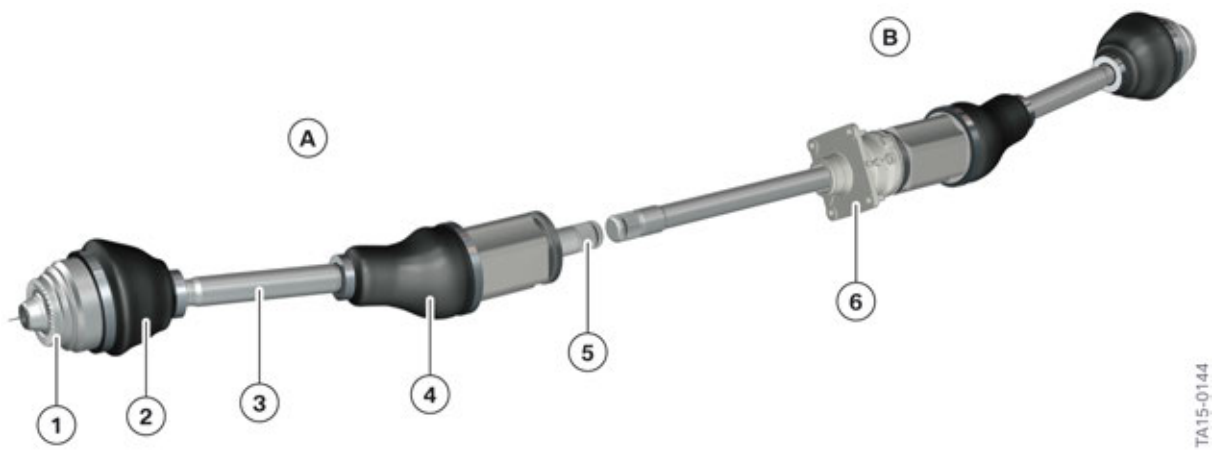

Drive shafts of the front axle in the G12

Index	Explanation
A	Output shaft, front left
B	Output shaft, front right
1	Spur gearing
2	Gaiter sleeve, wheel end

Index	Explanation
3	Output shaft
4	Gaiter sleeve, transmission end
5	Plug connection on front axle differential
6	Bearing support

9.2. Rear-wheel drive

9.2.1. Drive shafts

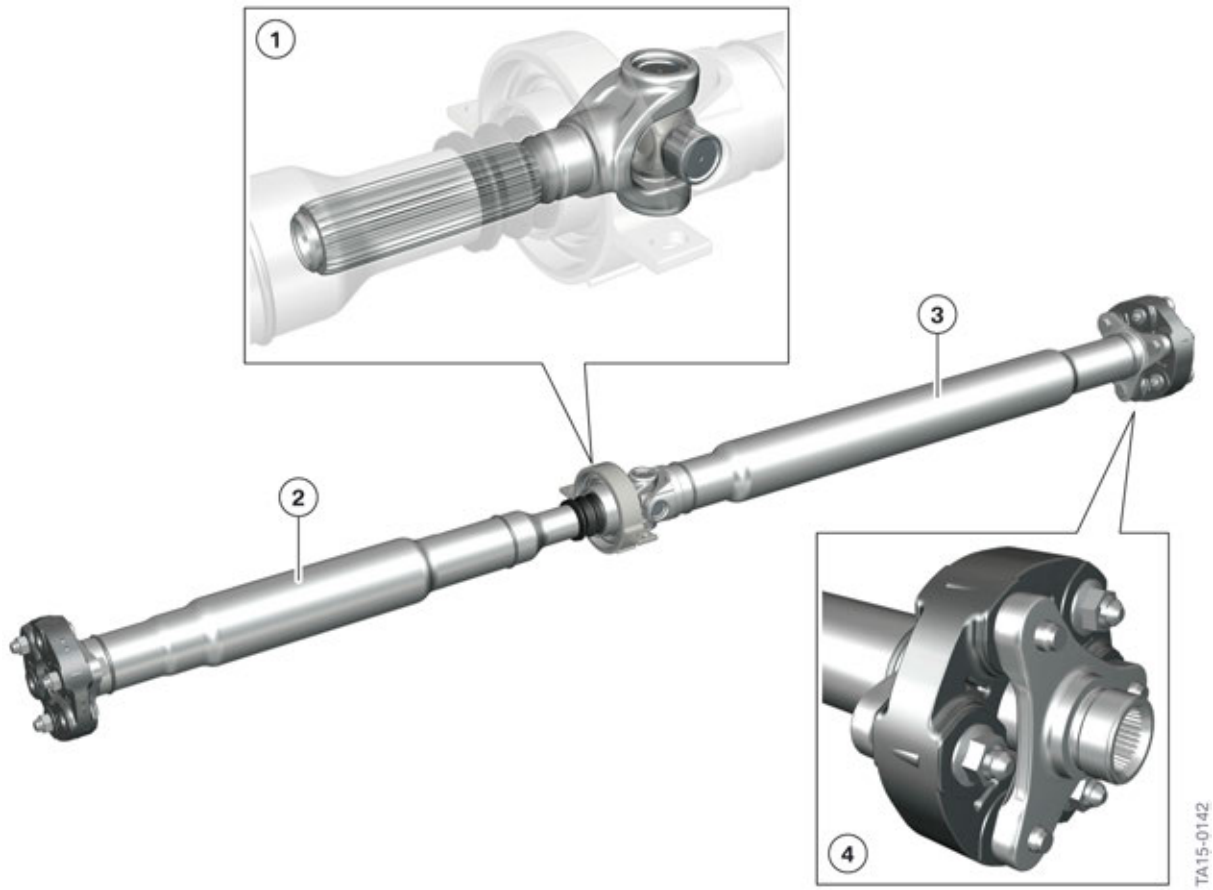

Drive shaft in the G12

Index	Explanation
1	Drive shaft center bearing with sliding unit
2	Front partial shaft (tubular shaft including crash feature)
3	Rear partial shaft (tubular shaft)
4	Plugged-in three-hole flange (on rear axle differential)

Different steel drive shafts are used depending on the engine and transmission variant.

The maximum permissible deflection angle of the drive shaft must not be exceeded when working on the drive shaft center bearing. The instructions in the current repair instructions must be observed in all cases.

9.2.2. Rear axle final drive

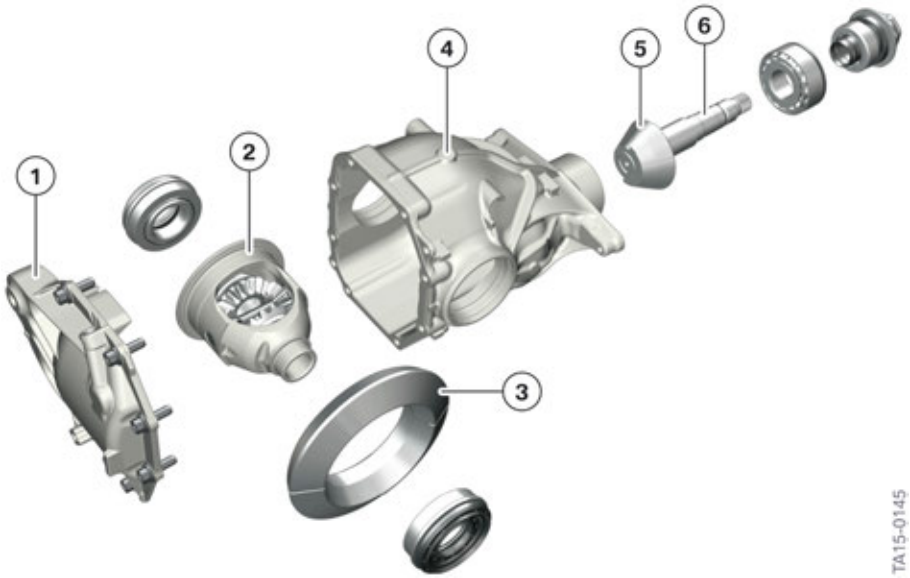

Rear axle differential in the G12

Index	Explanation
1	Housing cover
2	Differential
3	Ring wheel
4	Housing
5	Pinion
6	Transmission input shaft

A new differential oil is used in order to increase the efficiency of the drive train.

For the initial filling at the plant, the rear axle differential is filled with the following oil:

- Castrol BOT-448.

However, when the oil is topped up by BMW Service, the following oil is used as before:

- Castrol SAF-XO.

Both oils are compatible with each other and can be topped off. The oil of the rear axle differential is not subject to a service interval and can therefore be used for the entire vehicle lifecycle.

Technical data

Technical data	Rear axle differential 205AL	Rear axle differential 225AL
In-line engine	X	—
V-engine	—	X
Oil volume	approx. 0.75 – 0.9 l	approx. 0.9 – 1.4 l
Oil grade at plant	Castrol BOT-448	Castrol BOT-448
Oil grade in BMW Service	Castrol SAF-XO	Castrol SAF-XO
Possible ratios	3.08/3.23	2.56/2.81/3.08

9.2.3. Rear output shafts

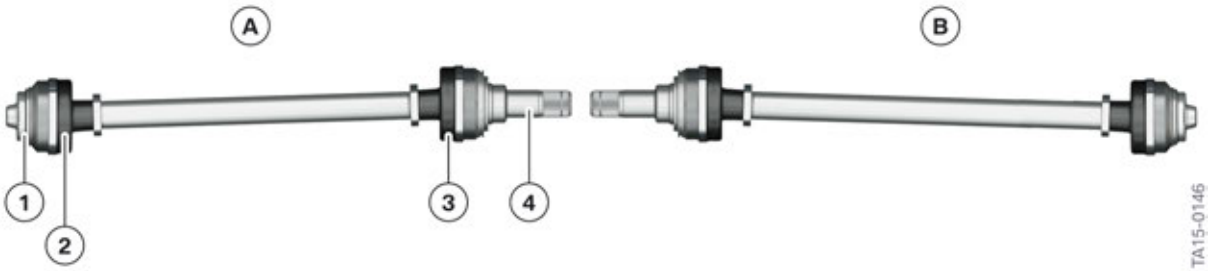

Drive shafts of the rear axle in the G12

Index	Explanation
A	Output shaft, left
B	Output shaft, right
1	Spur gearing
2	Gaiter sleeve, wheel end
3	Gaiter sleeve, transmission end
4	Plug connection on differential

Bayerische Motorenwerke Aktiengesellschaft
Qualifizierung und Training
Röntgenstraße 7
85716 Unterschleißheim, Germany

Technical training.
Product information.

G12 Voltage Supply and Bus Systems

Edited for the U.S. market by:
BMW Group University
Technical Training
ST1501 8/1/2015

BMW Service

General information

Symbols used

The following symbol is used in this document to facilitate better comprehension or to draw attention to very important information:

⚠

Contains important safety information and information that needs to be observed strictly in order to guarantee the smooth operation of the system.

Information status and national-market versions

BMW Group vehicles meet the requirements of the highest safety and quality standards. Changes in requirements for environmental protection, customer benefits and design render necessary continuous development of systems and components. Consequently, there may be discrepancies between the contents of this document and the vehicles available in the training course.

This document basically relates to the European version of left hand drive vehicles. Some operating elements or components are arranged differently in right-hand drive vehicles than shown in the graphics in this document. Further differences may arise as the result of the equipment specification in specific markets or countries.

Additional sources of information

Further information on the individual topics can be found in the following:

- Owner's Handbook
- Integrated Service Technical Application.

Contact: conceptinfo@bmw.de

©2015 BMW AG, Munich

Reprints of this publication or its parts require the written approval of BMW AG, Munich

The information contained in this document forms an integral part of the technical training of the BMW Group and is intended for the trainer and participants in the seminar. Refer to the latest relevant information systems of the BMW Group for any changes/additions to the technical data.

Information status: **June 2015**
BV-72/Technical Training

G12 Voltage Supply and Bus Systems

Contents

1. Bus Systems **1**
- 1.1. Bus overview 1
- 1.2. Main bus systems 3
  - 1.2.1. K-CAN 3
  - 1.2.2. PT-CAN 4
  - 1.2.3. FlexRay 5
  - 1.2.4. Ethernet 6
  - 1.2.5. D-CAN 10
- 1.3. Sub-bus systems 10
  - 1.3.1. LIN-Bus 10
  - 1.3.2. Local CAN 21
  - 1.3.3. USB 21
- 1.4. Diagnosis access OBD2 21

2. Control Units **22**
- 2.1. Installation locations of control units 22
- 2.2. Gateway 26
  - 2.2.1. Body Domain Controller (BDC) 26
- 2.3. Control units on the MOST bus 29
  - 2.3.1. Head unit 29
  - 2.3.2. Hi-fi amplifier with MOST bus 30
  - 2.3.3. Rear seat entertainment (RSE) 31
- 2.4. Control units on the K-CAN2 32
  - 2.4.1. Roof function center (FZD) 32
  - 2.4.2. Tailgate function module (HKFM) 32
  - 2.4.3. Seat modules 33
  - 2.4.4. Seat pneumatics modules 33
- 2.5. Control units on the K-CAN3 34
  - 2.5.1. Front Light Electronics 34
  - 2.5.2. Rear view camera (RFK) 34
  - 2.5.3. Parking Manoeuvre Assist (PMA) 35
  - 2.5.4. Blind spot detection (SWW) 35
- 2.6. Control units on the K-CAN4 36
  - 2.6.1. Active Sound Design (ASD) 36
  - 2.6.2. Controller (CON) 37
  - 2.6.3. Integrated automatic heating / air conditioning (IHKA) 37
  - 2.6.4. Light Effect Manager (LEM) 38
  - 2.6.5. Telematic Communication Box (TCB) 39
- 2.7. Control units on the K-CAN5 40
  - 2.7.1. Remote control receiver (FBD) 40

G12 Voltage Supply and Bus Systems

Contents

2.7.2. Near Field Communication NFC ... 40
2.7.3. Wireless charging tray (WCA) ... 41
2.8. Control units on the Ethernet ... 41
2.8.1. Active Cruise Control (ACC) ... 41
2.8.2. Top Rear Side View Camera (TRSVC) ... 42
2.8.3. Camera-based driver support systems (KAFAS) ... 42
2.9. Control units on the PT-CAN ... 43
2.9.1. Digital Motor Electronics DME, DME2 ... 43
2.9.2. High-beam assistant (FLA) ... 44
2.9.3. Instrument panel (KOMBI) ... 44
2.9.4. Night vision electronics NVE ... 45
2.10. Control units on the PT-CAN2 ... 45
2.10.1. Electronic transmission control (EGS) ... 45
2.10.2. Gear selector switch (GWS) ... 46
2.10.3. Power Control Unit (PCU) ... 46
2.11. Control units on the FlexRay ... 47
2.11.1. Advanced Crash Safety Module (ACSM) ... 47
2.11.2. Dynamic Stability Control DSC ... 48
2.11.3. Electric Active Roll Stabilization ... 48
2.11.4. Electronic Power Steering (EPS) ... 49
2.11.5. Rear axle slip angle control (HSR) ... 50
2.11.6. Optional equipment system (SAS) ... 50
2.11.7. Transfer box ... 51
2.11.8. Vertical Dynamics Platform (VDP) ... 51
2.12. Control units on the local CAN ... 52
2.12.1. Radar sensor ... 52
2.12.2. Blind spot detection (SWW2) (secondary) ... 53

3. Voltage Supply ... 54
3.1. Overview of voltage supply ... 54
3.1.1. System wiring diagram ... 54
3.2. Components ... 56
3.2.1. Overview of luggage compartment ... 56
3.2.2. Overview of engine compartment ... 57
3.2.3. Battery ... 57
3.2.4. Intelligent battery sensor ... 58
3.2.5. Battery Safety Terminal ... 58
3.2.6. Alternator ... 59
3.2.7. Integrated supply module ... 59
3.2.8. Power distribution box, front right ... 60

G12 Voltage Supply and Bus Systems

Contents

3.2.9. Power distribution box, front left 60
3.2.10. Power distribution box, rear 61
3.2.11. Body Domain Controller 61
3.2.12. PCU with vehicle electrical system assistance measure 62
3.2.13. 24 V Electronic Power Steering 62

4. Terminal Control 66
4.1. Vehicle conditions 66
4.2. Power supply terminals 69
4.3. Partial network operation 70
4.3.1. Prerequisites for partial network operation 70
4.3.2. Prerequisites of control units for partial network operation 71

G12 Voltage Supply and Bus Systems

1. Bus Systems

1.1. Bus overview

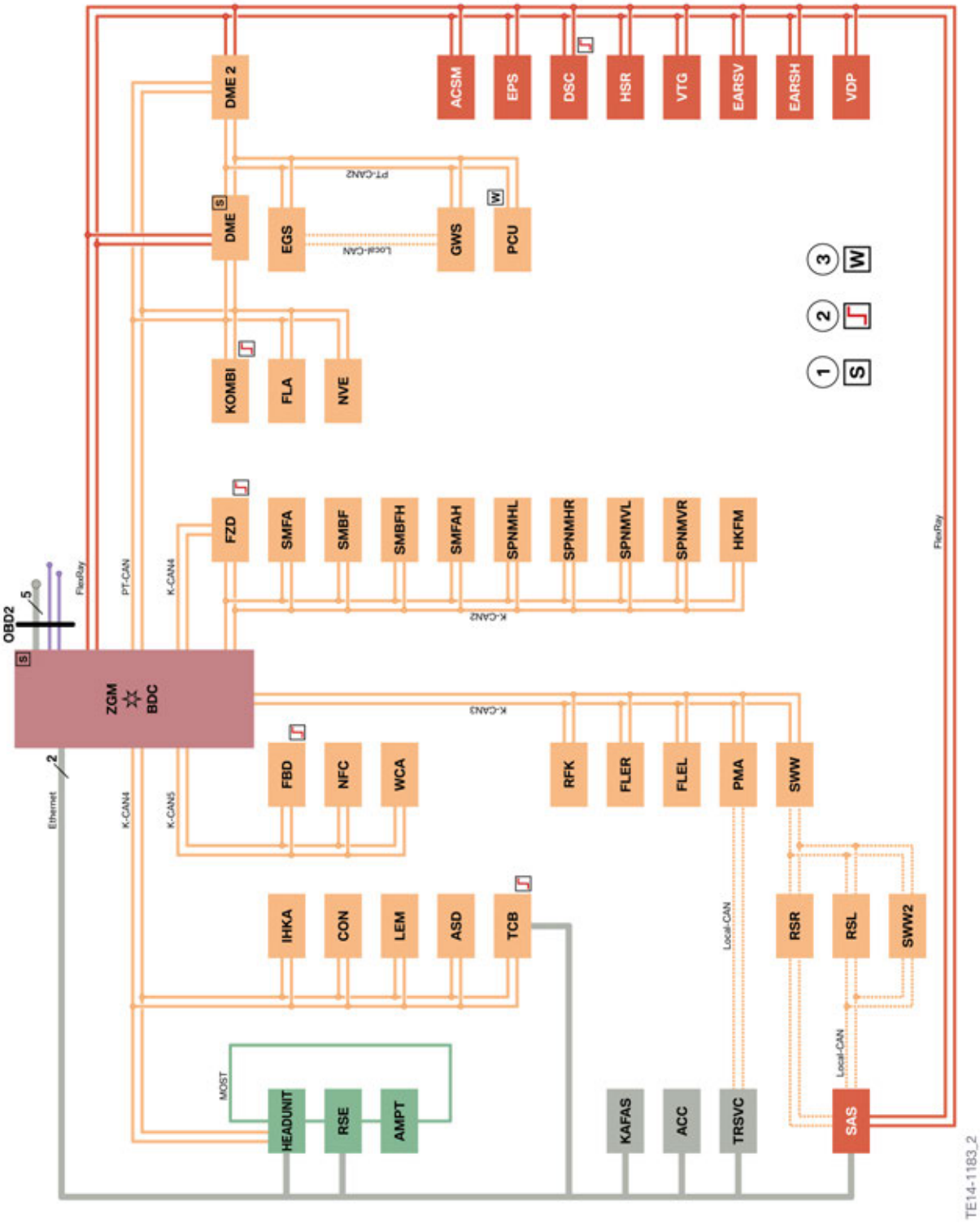

Bus overview

G12 Voltage Supply and Bus Systems

1. Bus Systems

Index	Explanation
ACC	Active cruise control
ACSM	Advanced Crash Safety Module
AMPT	Top Hi-Fi amplifier
ASD	Active Sound Design
BDC	Body Domain Controller
CON	Controller
DME	Digital Motor Electronics
DME2	Digital Engine Electronics 2
DSC	Dynamic Stability Control
EARSH	Electric Active Roll Stabilization rear
EARSV	Electric Active Roll Stabilization front
EGS	Electronic transmission control
EPS	Electromechanical Power Steering
FBD	Remote control service
FLA	High-beam assistant
FLER	Front Light Electronics Right
FLEL	Front Light Electronics Left
FZD	Roof function center
GWS	Gear selector
HEADUNIT	Head unit
HKFM	Tailgate function module
HSR	Rear axle slip angle control (Rear steering module)
IHKA	Integrated automatic heating / air conditioning
KAFAS	Camera-based driver support systems
KOMBI	Instrument panel
LEM	Light Effect Manager
NFC	Near Field Communication
NVE	Night Vision Electronics
PCU	Power Control Unit
PMA	Parking Manoeuvre Assist
RFK	Reversing camera
RSE	Rear Seat Entertainment
RSL	Radar Sensor Left (avoidance assistant)
RSR	Radar Sensor Right (avoidance assistant)
SAS	Optional equipment system

G12 Voltage Supply and Bus Systems

1. Bus Systems

Index	Explanation
SMBF	Seat module, passenger
SMBFH	Seat module, passenger, rear
SMFA	Seat module, driver
SMFAH	Seat module, driver, rear
SPNMHL	Seat pneumatics module back left
SPNMHR	Seat pneumatics module back right
SPNMVL	Seat pneumatics module front left
SPNMVR	Seat pneumatics module front right
SWW	Blind spot detection (primary)
SWW2	Blind spot detection (secondary)
TCB	Telematic Communication Box
TRSVC	Top Rear Side View Camera
VDP	Vertical Dynamics Platform
VTG	Transfer box
WCA	Wireless charging tray
ZGM	Central gateway module
1	Start-up node control units for starting and synchronizing the FlexRay bus system
2	Control units with wake-up authorization
3	Control units also connected at terminal 15WUP

1.2. Main bus systems

1.2.1. K-CAN

The following K-CANs are used in the G12:

- K-CAN2
- K-CAN3
- K-CAN4
- K-CAN5

The control units on the K-CAN5 are not displayed in the bus overview by the BMW diagnosis system ISTA. Diagnosis is performed via the Body Domain Controller.

All K-CAN data buses have a data transfer rate of 500 kBit/s.

1.2.2. PT-CAN

The following PT-CANs are used in the G12:

- PT-CAN
- PT-CAN2

The gateway for the PT-CAN2 is located in the DME.

Both PT-CAN data buses have a data transfer rate of 500 kBit/s.

G12 Voltage Supply and Bus Systems

1. Bus Systems

1.2.3. FlexRay

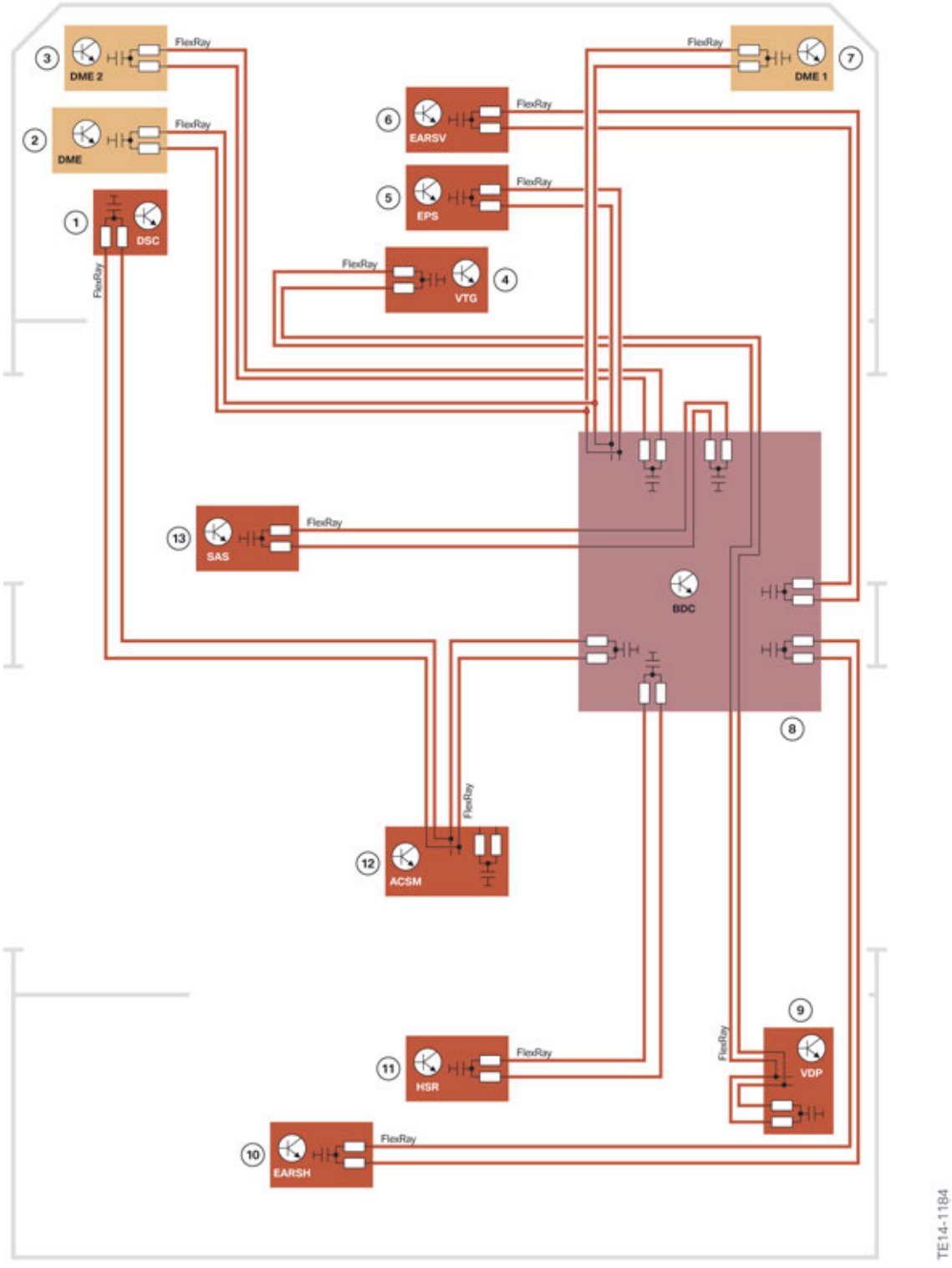

FlexRay

Index	Explanation
1	Dynamic Stability Control (DSC)
2	Digital Motor Electronics (DME) (only 6-cylinder engines)
3	Digital Motor Electronics 2 (DME2) (only 8-cylinder engines)
4	Transfer box
5	Electronic Power Steering (EPS)
6	Electric active roll stabilization front (EARSV)
7	Digital Motor Electronics 1 (DME1) (only 8-cylinder engines)
8	Body Domain Controller (BDC)
9	Vertical Dynamics Platform (VDP)
10	Electric Active Roll Stabilization rear (EARSH)
11	Rear axle slip angle control (HSR)
12	Advanced Crash Safety Module (ACSM)
13	Optional equipment system (SAS)

The FlexRay overview includes all engine versions and optional equipment. The DME (item 2) is present for 6-cylinder engines. DME1 (item 7) and DME2 (item 3) are present for 8-cylinder engines. The terminating resistors for line termination are located in the DME units and in the Body Domain Controller.

The FlexRay has a data transfer rate of 10 MBit/s.

1.2.4. Ethernet

Ethernet with 5 lines or 4 lines

Ethernet was already used with 5 lines in the F01 for vehicle programming and for the map update of the navigation system (4 data lines and 1 line for interface activation). In the F01 there is an additional Ethernet connection from the head unit to the Rear Seat Entertainment (RSE) with 4 data lines for transmission of the navigation data for the RSE.

Both Ethernet variants are comparable with the standard Ethernet variant 100BASE–TX in PC networks. The Ethernet version with 5 lines is still used in the G12 from the OBD2 interface to the Body Domain Controller.

Ethernet with 2 lines

A new Ethernet with two lines is used for communication in the G12.

This two-wire, twisted and unshielded bus line was developed by the OPEN Alliance BroadR-Reach. At BMW, this Ethernet is called OABR Ethernet and has been adapted for the automotive sector.

The data rate for an OABR Ethernet connection is up to 2 x 100 Mbit/s.

G12 Voltage Supply and Bus Systems

1. Bus Systems

Hardware advantages

One advantage is the transmission of vehicle camera data. Vehicle cameras (IP-based) are not connected to one control unit , but several control units by Ethernet which allows these units to access the camera data flow efficiently. The network is therefore very flexible and is well prepared for the future.

Another important advantage is the fast programming of control units. The programming times are reduced significantly via Ethernet. Whereas a CAN bus can only transmit data with a maximum length of 8 bytes per message, Ethernet messages have a length of over 1500 bytes. The user data rate thus increases: Considerably more message packages can be transmitted in a shorter period.

The OABR Ethernet connection equates to additional weight and cost savings, due to only using 2 wires.

Data transfer

For data transfer in the standard Ethernet 100BASE-TX, one line pair is needed for transmitting data and one pair for receiving.

In contrast to the standard Ethernet described above, with the OABR Ethernet the data is now transmitted with one line pair. This means with the 2-wire OABR Ethernet, a simultaneous transmit-receive mode is done via each of the two single pair cables. The two lines transmit a sum signal differentially. If a line is interrupted, a signal can no longer flow back through the second wire via the differential transmission. A symmetrical transmission would thus no longer be possible, the communication via the data bus comes to a standstill.

During the transmission, messages with 100 MBit/s are transmitted simultaneously in both directions via the lines. In total, this gives a maximum transmission speed of 200 MBit/s of data. In the transceiver, the transmitted message is subtracted from the bus signal. The result is the message of the opposite transceiver. A schematic diagram of the transceiver of the OABR Ethernet shows how the data exchange takes place:

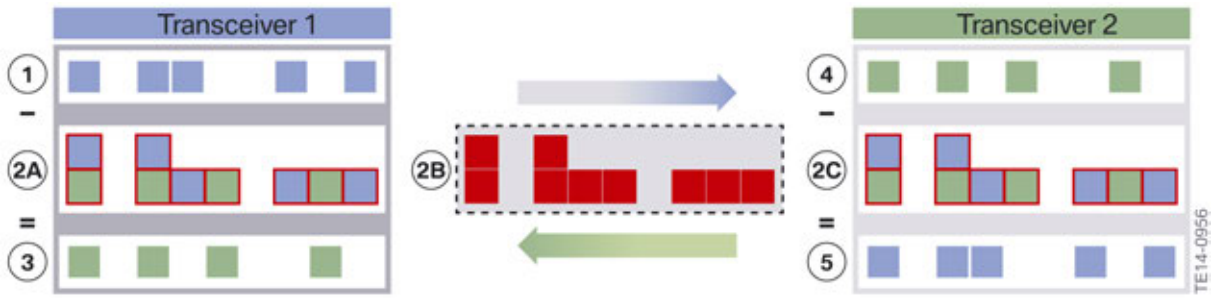

Transceiver in the OABR Ethernet schematic diagram

Index	Explanation
1	Message from transceiver 1
2A, 2B, 2C	Message on the OABR Ethernet
3	Subtracted message from transceiver 2
4	Message from transceiver 2
5	Subtracted message from transceiver 1

G12 Voltage Supply and Bus Systems

1. Bus Systems

Layer model

The message transmission follows the rules which were defined for the conventional Ethernet 100BaseTX. The bodies on the transmitter and receiver side must work according to these defined rules so that they agree how the data is to be processed.

With the Ethernet, the Open Systems Interconnection model is used (OSI model).

It comprises 7 layers:

- Layer 1: Physical layer with 100 MBit/s
- Layer 2: Link (device driver, hardware)
- Layer 3: Network (package delivery, routing)
- Layer 4: Transport (package security, encryption)
- Layers 5-7 Applications (user applications and processes)

For the 2-wire Ethernet OABR, the following modules were also added:

- Vehicle network management
- Service discovery report (for the asynchronous starting and stopping of functions)

G12 Voltage Supply and Bus Systems

1. Bus Systems

The OSI model for the 2-wire OABR Ethernet looks as follows:

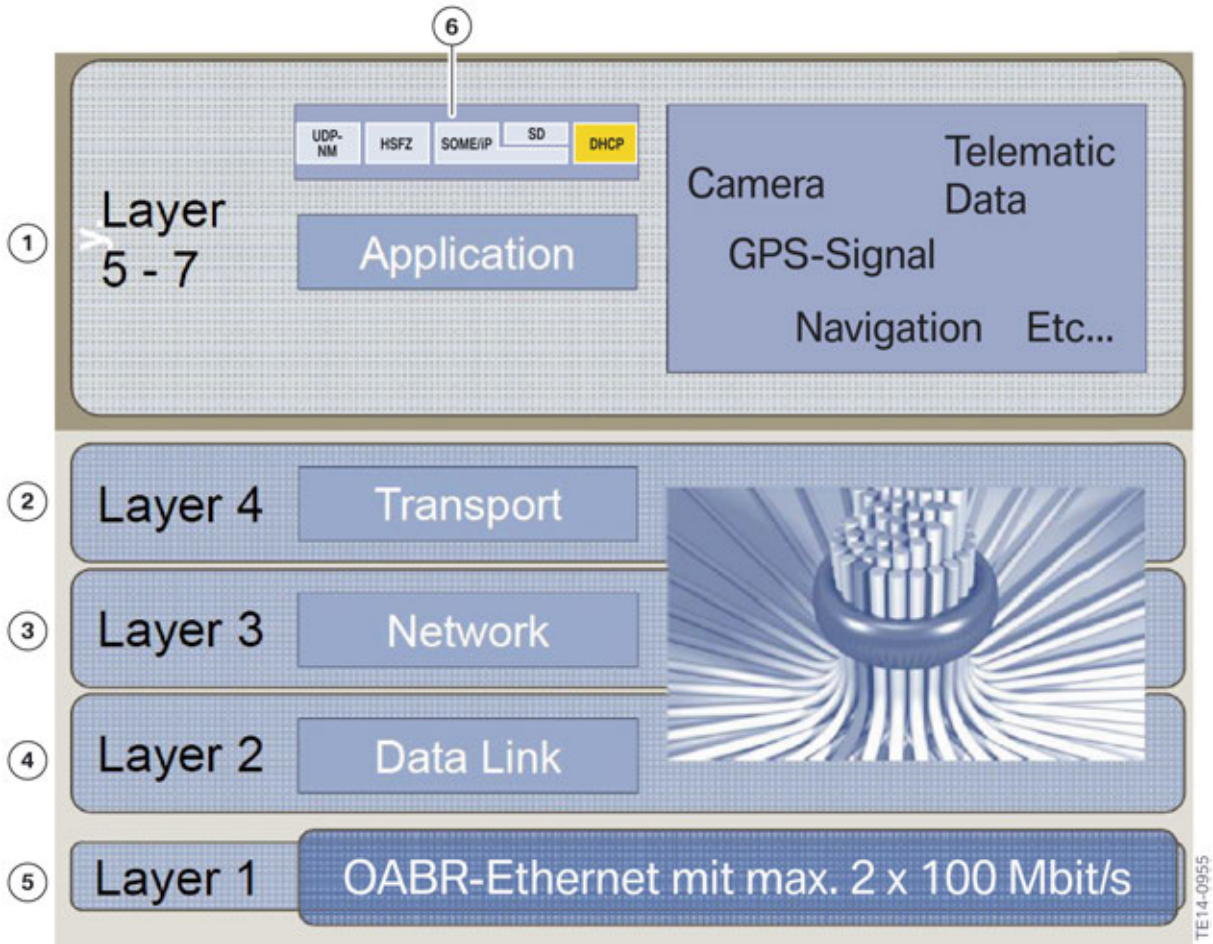

OSI model

Index	Explanation
1	Applications (user applications and processes)
2	Transport (package security, encryption)
3	Network (package delivery, routing)
4	Link = connection setup, interface (device driver, hardware)
5	Physical layer for data transfer with 2x100 MBit/s
6	Additional modules defined for the OABR Ethernet

G12 Voltage Supply and Bus Systems

1. Bus Systems

Application of 2-wire OABR Ethernet in the G12

The following control units are connected to the vehicle electrical system via 2-wire OABR Ethernet in the G12:

- Active Cruise Control (ACC)
- Camera-based driver assistance systems (KAFAS)
- Top Rear Side View Camera (TRSVC)

The following control units are also connected to the vehicle electrical system via 2-wire OABR Ethernet in the G12:

- Headunit (HEADUNIT)
- Rear Seat Entertainment (RSE)
- Optional equipment system (SAS)
- Telematic Communication Box (TCB)
- Top Rear Side View Camera (TRSVC)

1.2.5. D-CAN

The D-CAN has a data transfer rate of 500 kBit/s.

1.3. Sub-bus systems

1.3.1. LIN-Bus

For a better overview, the LIN buses are divided up between several wiring diagrams for the G12.

G12 Voltage Supply and Bus Systems

1. Bus Systems

LIN bus overview in the door area

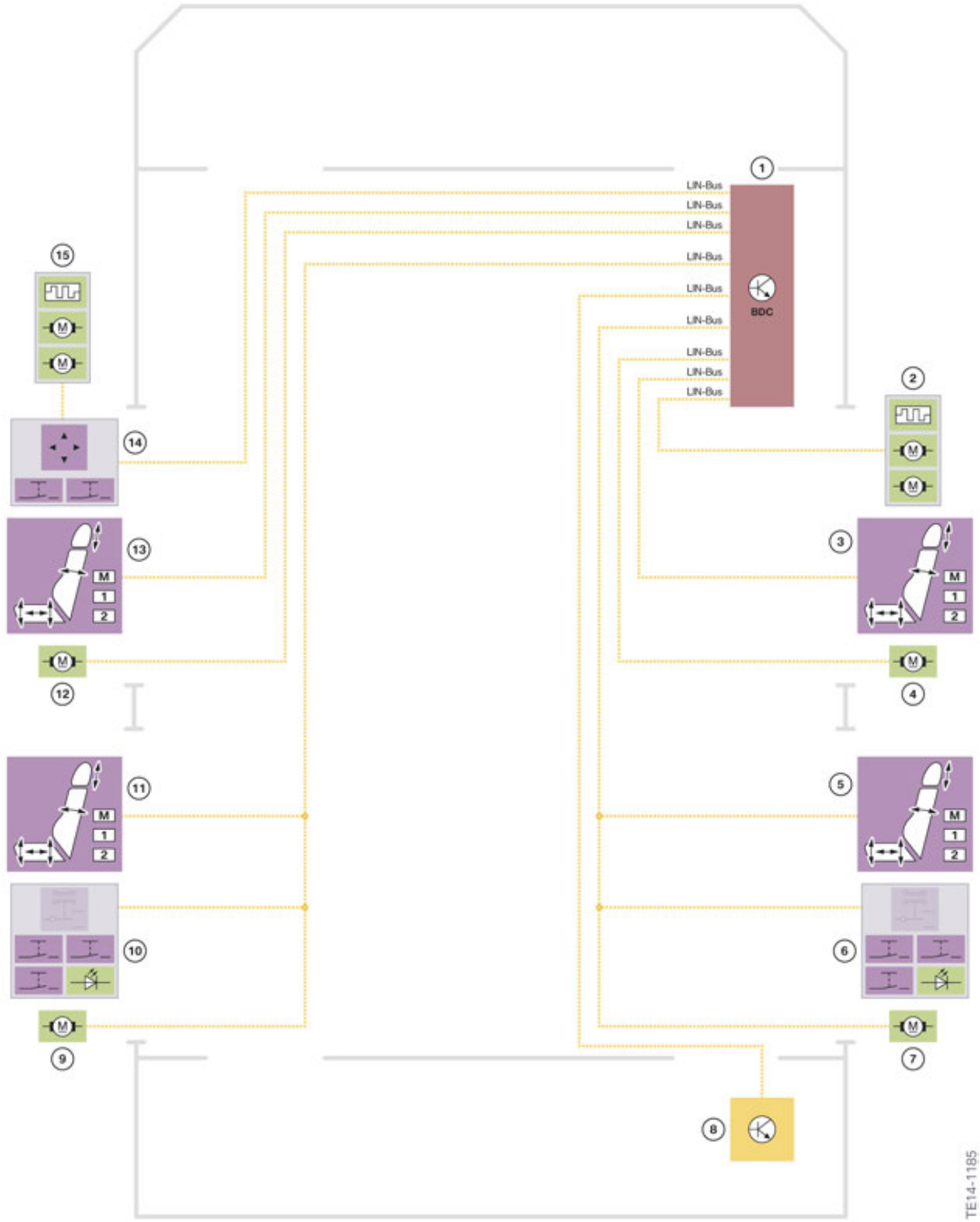

LIN-Bus

G12 Voltage Supply and Bus Systems

1. Bus Systems

Index	Explanation
1	Body Domain Controller (BDC)
2	Exterior mirror, front passenger side
3	Memory seat, front passenger's side
4	Power window electronics, passenger's side front
5	Memory seat, passenger's side rear
6	Switch for roller sunblind
7	Power window electronics, passenger’s side rear
8	Non-contact tailgate opening
9	Power window electronics, driver’s side rear
10	Switch for roller sunblind
11	Memory switch, driver’s side rear
12	Power window electronics, driver's side front
13	Memory switch, driver’s side front
14	Switch block, driver's door
15	Exterior mirror, driver's side

G12 Voltage Supply and Bus Systems

1. Bus Systems

LIN bus overview for engine electrical system and voltage supply

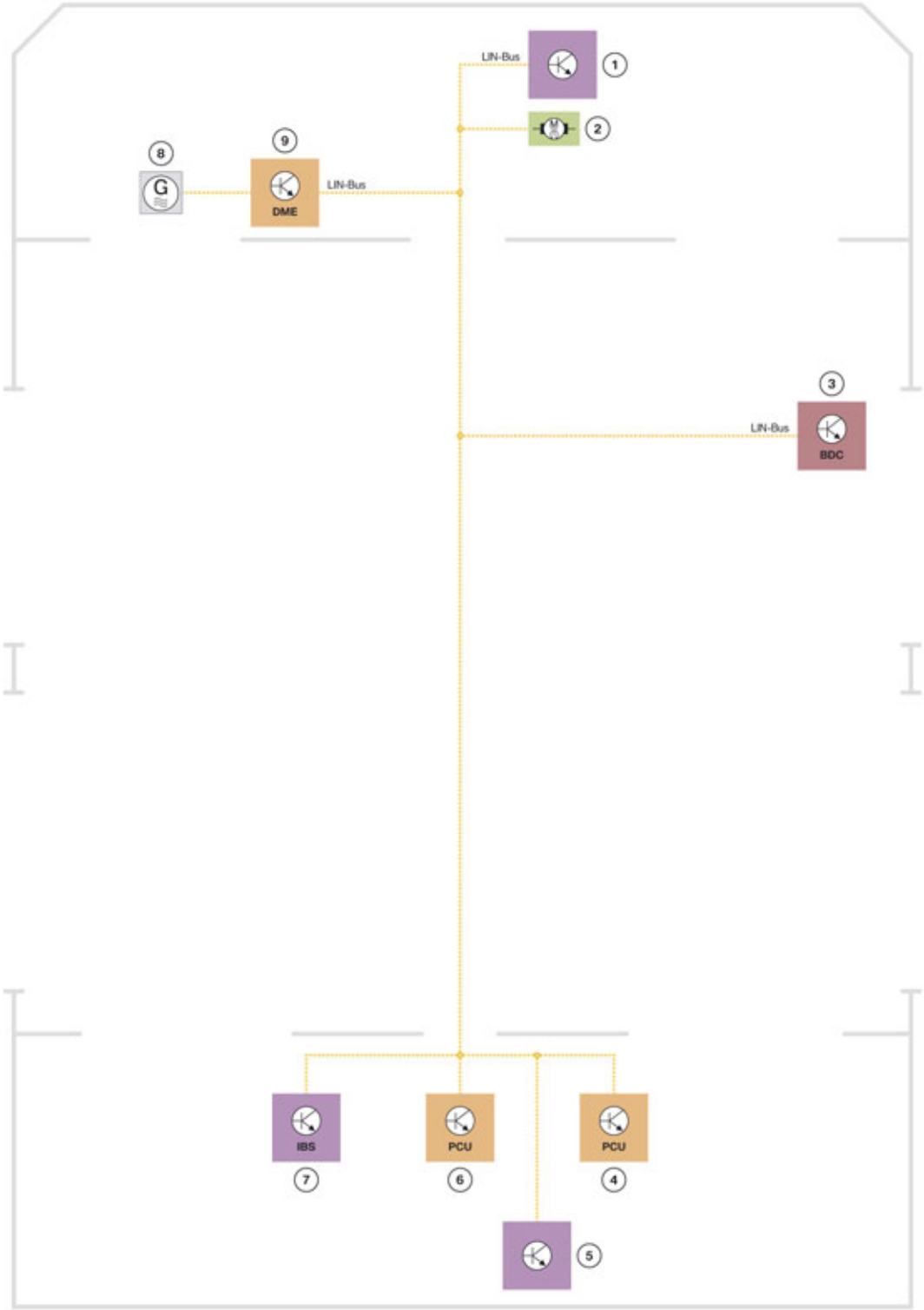

LIN-Bus

G12 Voltage Supply and Bus Systems

1. Bus Systems

Index	Explanation
1	Air damper control
2	Electric fan
3	Body Domain Controller (BDC)
4	Power Control Unit (PCU) 500W
5	Rear right power distribution box
6	Power Control Unit (PCU) 150 W [1]
7	Intelligent battery sensor (IBS)
8	Alternator
9	Digital Motor Electronics (DME)

[1]The Power Control Unit (PCU) 150 W is installed in vehicles with 24 V steering.

G12 Voltage Supply and Bus Systems

1. Bus Systems

LIN bus overview for roof function center

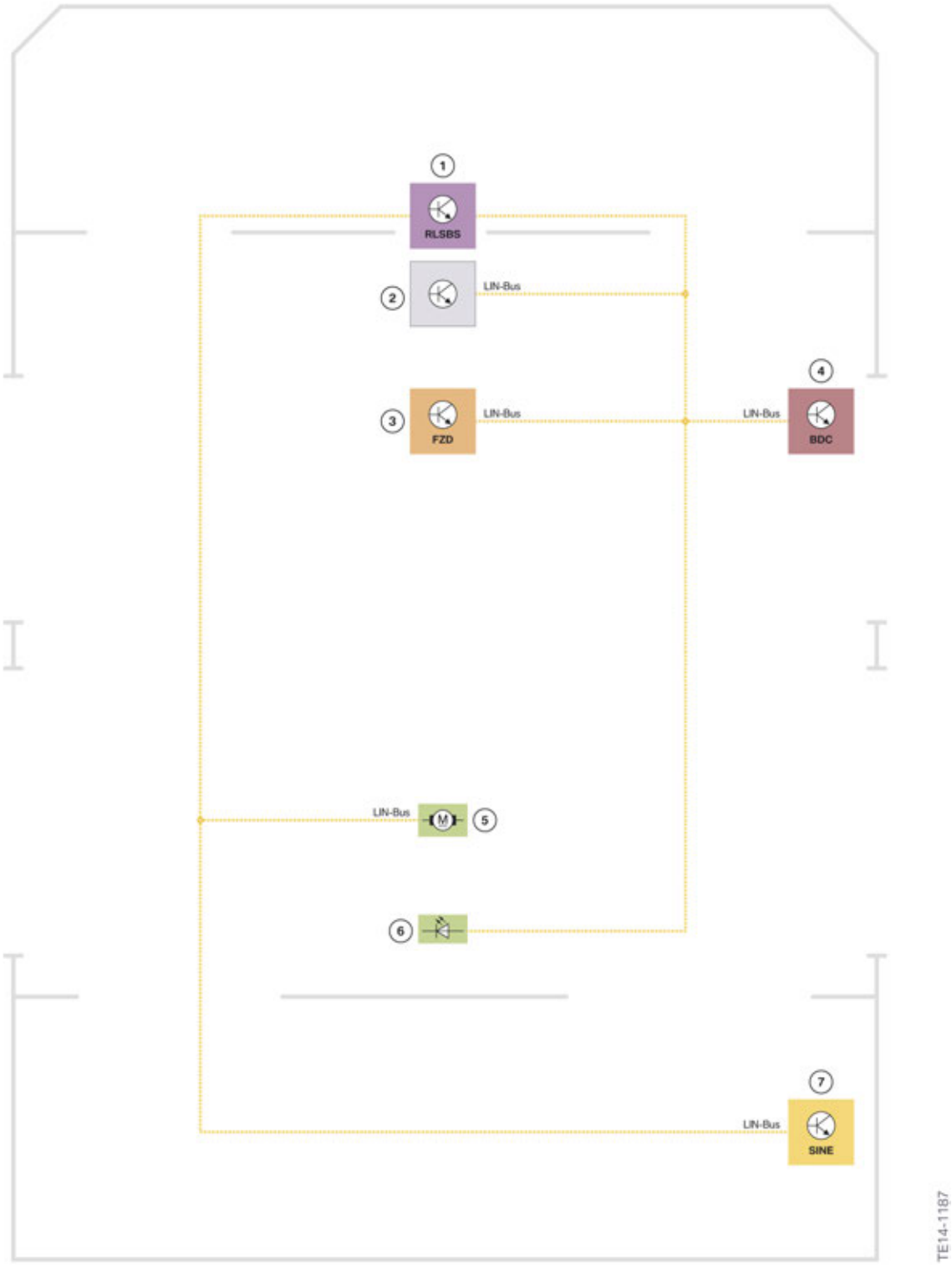

LIN-Bus

G12 Voltage Supply and Bus Systems

1. Bus Systems

Index	Explanation
1	Rain-light-solar-condensation sensor
2	Inside mirror
3	Roof function center (FZD)
4	Body Domain Controller (BDC)
5	Sliding roofliner motor
6	Interior lighting, rear
7	Siren with tilt alarm sensor SINE

G12 Voltage Supply and Bus Systems

1. Bus Systems

LIN bus overview for steering column switch cluster and operating units

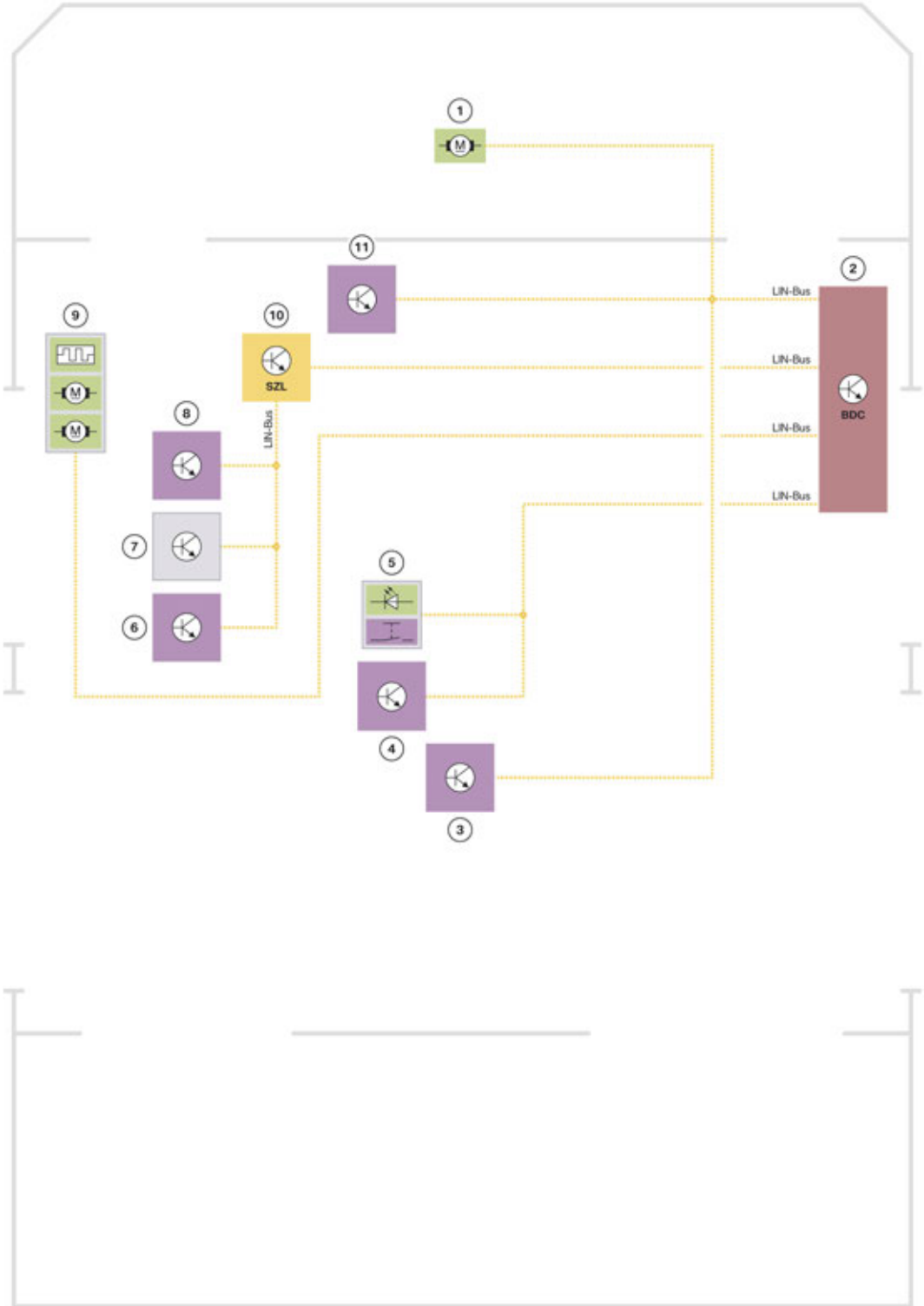

LIN-Bus

G12 Voltage Supply and Bus Systems

1. Bus Systems

Index	Explanation
1	Wiper motor
2	Body Domain Controller (BDC)
3	Operating unit, center console
4	Audio operating facility
5	Hazard warning switch/Intelligent Safety button
6	Touch detection HOD (Hands Off Detection)
7	Steering wheel module
8	Multifunction steering wheel buttons, right
9	Operating unit for light
10	Steering column switch cluster (SZL)
11	Steering column adjustment

G12 Voltage Supply and Bus Systems

1. Bus Systems

LIN bus overview for integrated automatic heating/air conditioning system

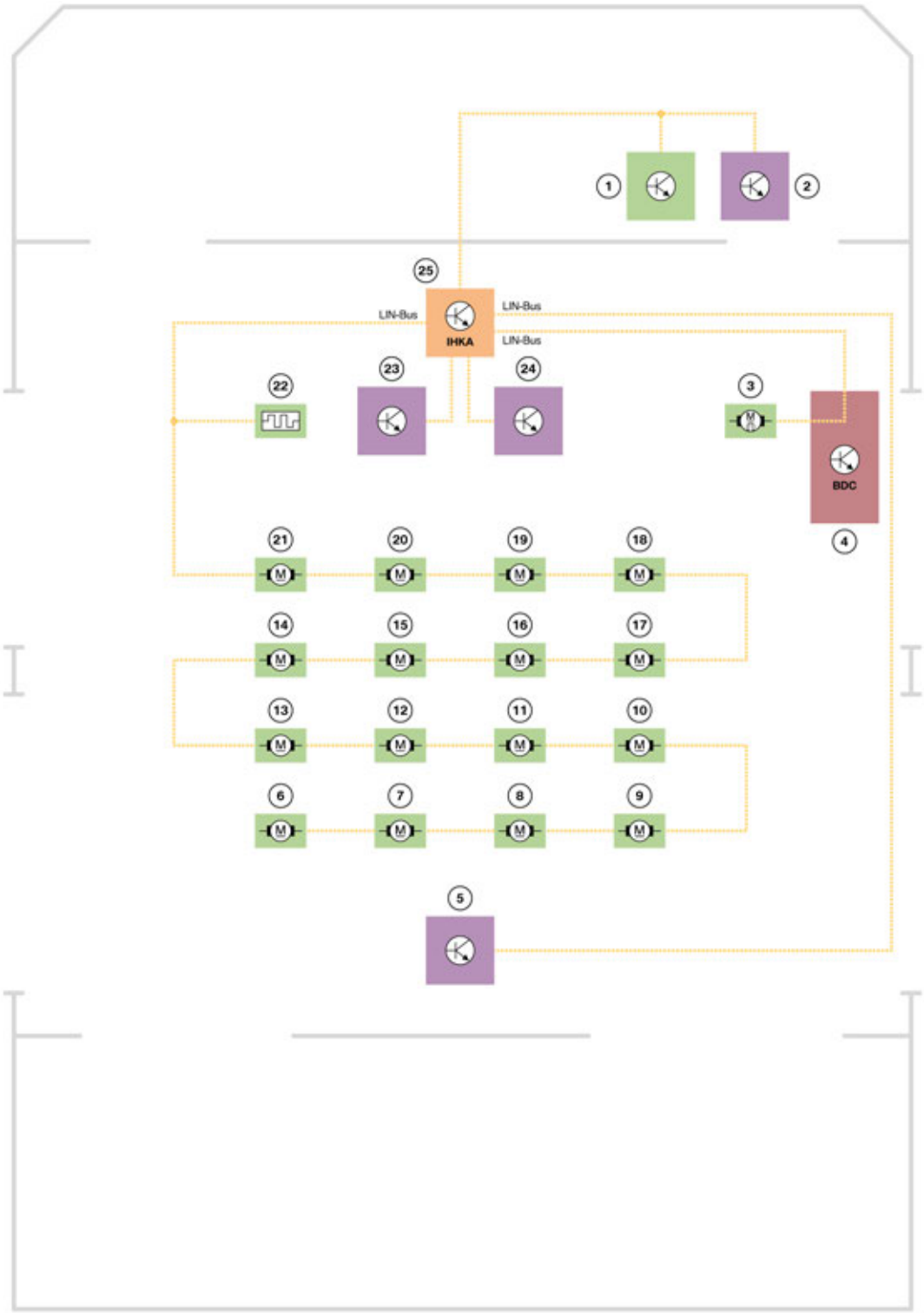

LIN-Bus

G12 Voltage Supply and Bus Systems

1. Bus Systems

Index	Explanation
1	Air freshener
2	Ozone generator
3	Blower motor
4	Body Domain Controller (BDC)
5	Operating unit, rear passenger compartment
6	Stepper motor, indirect ventilation
7	Stepper motor for blending flap, right rear passenger compartment
8	Stepper motor for blending flap, left rear passenger compartment
9	Stepper motor for blending flap, right
10	Stepper motor for blending flap, left
11	Stepper motor for air distribution, right rear passenger compartment
12	Stepper motor for air distribution, left rear passenger compartment
13	Stepper motor for footwell, right
14	Stepper motor for footwell, left
15	Stepper motor for stratification, right
16	Stepper motor for stratification, left
17	Stepper motor for ventilation, right
18	Stepper motor for ventilation, left
19	Stepper motor for defrost function
20	Stepper motor for air recirculation function
21	Stepper motor for fresh air
22	Electric auxiliary heater (Not for US)
23	Operating unit, air conditioning
24	Touch operating unit in the center grill
25	Integrated automatic heating / air conditioning (IHKA)

1.3.2. Local CAN

The following local CAN buses are present in the G12 with corresponding equipment:

- Local CAN from electronic transmission control (EGS) to the gear selector switch (GWS)
- Local CAN from the camera-based driver assistance system (KAFAS) to the Parking Manoeuvre Assist (PMA)
- Local CAN from the optional equipment system (SAS) to the radar sensor right (RSR)
- Local CAN from the optional equipment system (SAS) to the radar sensor left (RSL) and blind spot detection (secondary) (SWW2)
- Local CAN from the blind spot detection (primary) (SWW) to the radar sensor right (RSR), to the radar sensor left (RSL) and blind spot detection (secondary) (SWW2)

The control units on the local CAN are not displayed in the bus overview by the BMW diagnosis system ISTA. Diagnosis takes place via the corresponding primary control unit.

The local CAN buses have a data transfer rate of 500 kBit/s.

1.3.3. USB

The following USB interfaces are provided in the G12 depending on the vehicle equipment:

- USB interface in the center console (standard)
- USB interface in the center armrest
- USB interface in the base plate
- USB interface in Rear Seat Entertainment

1.4. Diagnosis access OBD2

The vehicle diagnosis via D-CAN is effected using the OBD2 interface. The Ethernet access for the vehicle programming is also located in the OBD2 interface.

G12 Voltage Supply and Bus Systems

2. Control Units

2.1. Installation locations of control units

To provide a better overview, the control units are shown in two photos with different perspectives. All control units are shown in both pictures.

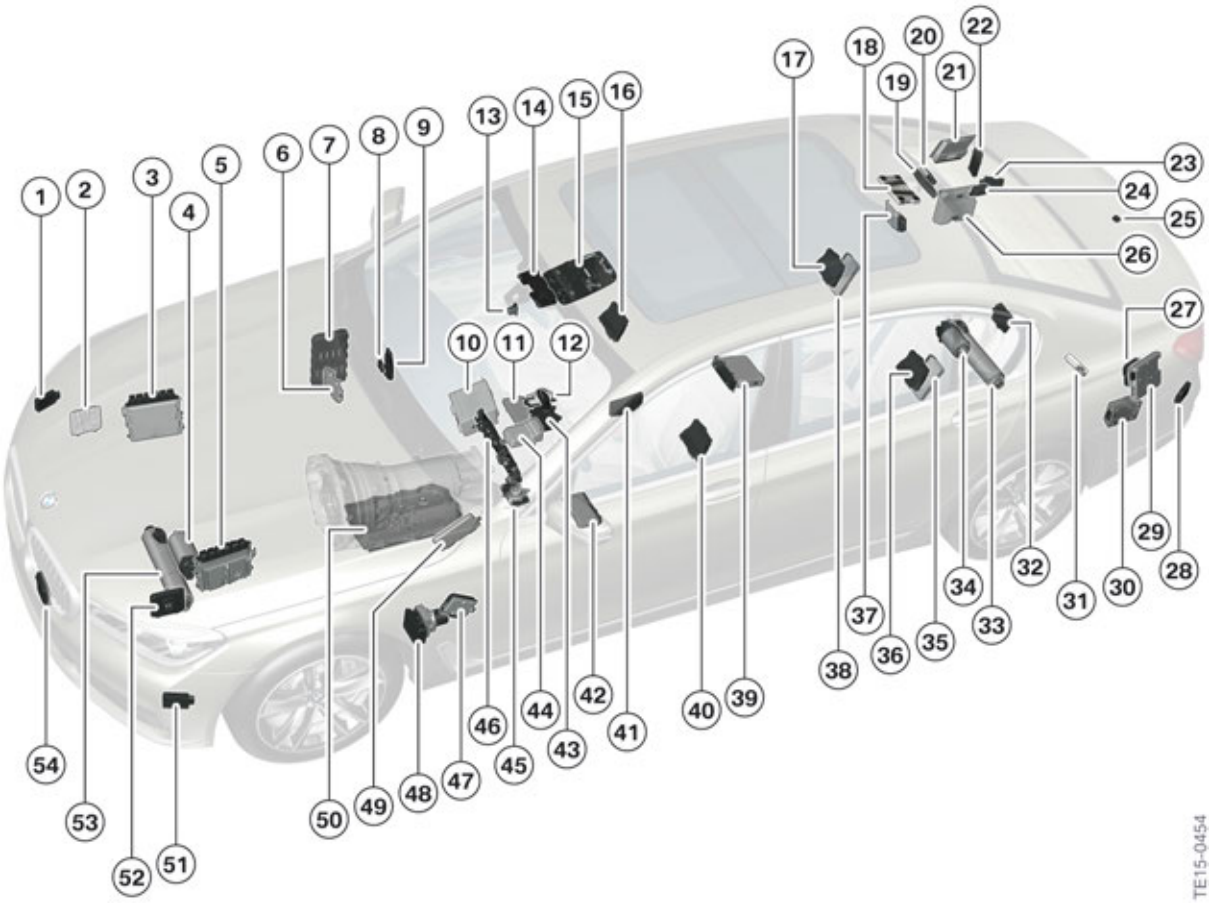

Installation locations of control units

Index	Explanation
1	Radar Sensor Right (RSR)
2	Front Light Electronics Right (FLER)
3	Digital Motor Electronics (DME)
4	Electronic Power Steering (EPS)
5	Digital Engine Electronics 2 (DME2)
6	Night Vision Electronics (NVE)
7	Body Domain Controller (BDC)
8	Near Field Communication (NFC)
9	Integrated automatic heating / air conditioning (IHKA)
10	Headunit (HU-H2)

G12 Voltage Supply and Bus Systems

2. Control Units

Index	Explanation
11	Front passenger seat module (SMBF)
12	Controller (CON)
13	High-beam assistant (FLA)
14	Camera-based driver support systems (KAFAS)
15	Roof function center (FZD)
16	Seat pneumatics module front right (SPNMVR)
17	Seat pneumatics module back right (SPNMHR)
18	Telematic Communication Box (TCB)
19	Trailer module AHM — Not for US
20	Parking Manoeuvre Assist (PMA)
21	Vertical Dynamics Platform (VDP)
22	Tailgate function module (HKFM)
23	Blind spot detection (SWW)
24	Remote control service (FBD)
25	Rear view camera (RFK)
26	Power Control Unit (PCU)
27	Light Effect Manager (LEM)
28	Blind spot detection (secondary) (SWW2)
29	Video module (VM) — Not for US
30	Top Hi-Fi amplifier (AMPT)
31	Active Sound Design (ASD)
32	Rear climate control (Not for US)
33	Electric Active Roll Stabilization rear (EARSH)
34	Rear axle slip angle control (HSR)
35	Seat module, driver, rear (SMFH)
36	Seat pneumatics module back left (SPNMHL)
37	Selective Catalytic Reduction (SCR) — Not for US
38	Front passenger seat module, rear (SMBFH)
39	Rear Seat Entertainment (RSE)
40	Seat pneumatics module front left (SPNMVL)
41	Wireless charging tray (WCA)
42	Driver's seat module (SMFA)
43	Gear selector switch (GWS)
44	Advanced Crash Safety Module (ACSM)
45	Transfer box

G12 Voltage Supply and Bus Systems

2. Control Units

Index	Explanation
46	Instrument panel (KOMBI)
47	Optional equipment system (SAS)
48	Dynamic Stability Control (DSC)
49	Control unit for Top Rear Side View Camera (TRSVC)
50	Electronic transmission control (EGS)
51	Radar Sensor Left (RSL)
52	Front Light Electronics Left (FLEL)
53	Electric Active Roll Stabilization front EARSV
54	Active Cruise Control (ACC)

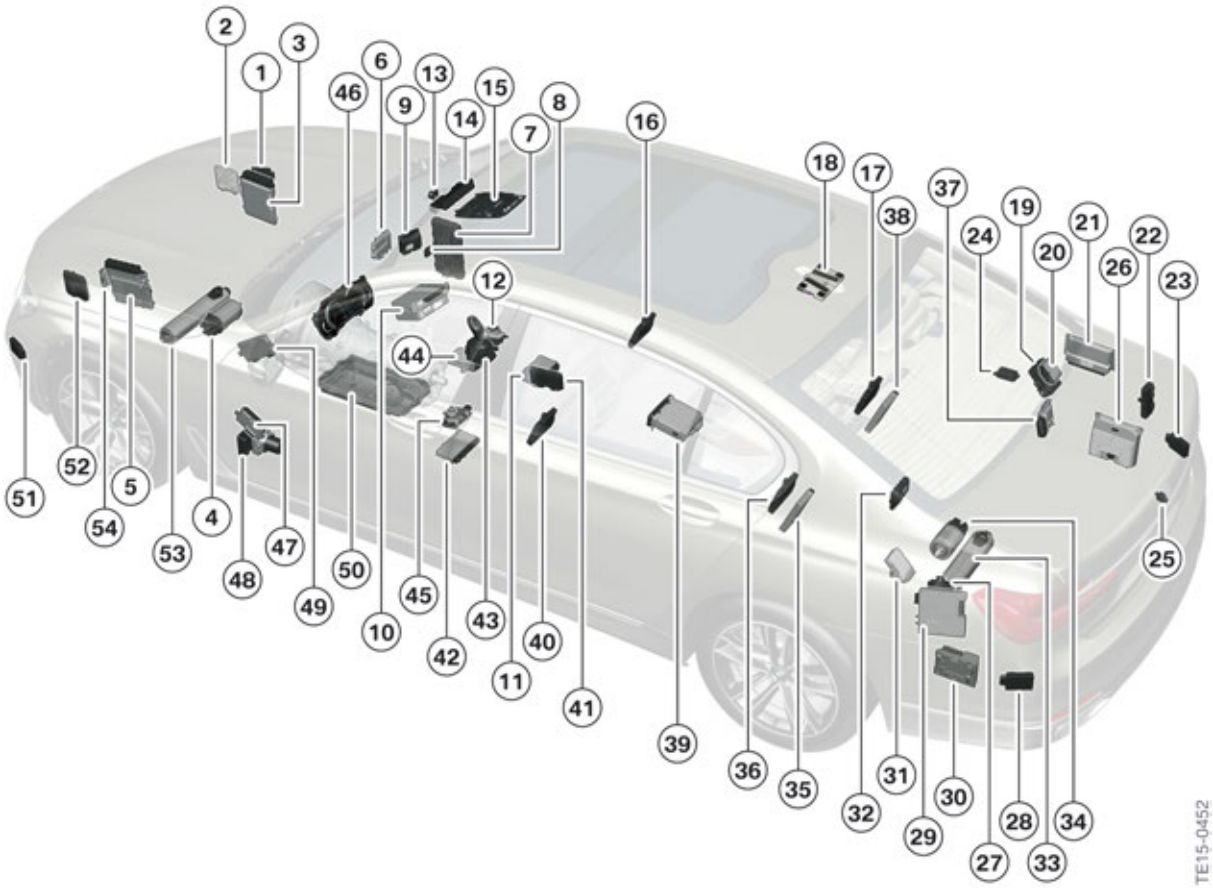

Installation locations of control units

Index	Explanation
1	Radar Sensor Right (RSR)
2	Front Light Electronics Right (FLER)
3	Digital Motor Electronics (DME)
4	Electronic Power Steering (EPS)

G12 Voltage Supply and Bus Systems
2. Control Units

Index	Explanation
5	Digital Engine Electronics 2 (DME2)
6	Night Vision Electronics (NVE)
7	Body Domain Controller (BDC)
8	Near Field Communication (NFC)
9	Integrated automatic heating / air conditioning (IHKA)
10	Headunit (HU-H2)
11	Front passenger seat module, (SMBF)
12	Controller (CON)
13	High-beam assistant (FLA)
14	Camera-based driver support systems (KAFAS)
15	Roof function center (FZD)
16	Seat pneumatics module front right (SPNMVR)
17	Seat pneumatics module back right (SPNMHR)
18	Telematic Communication Box (TCB)
19	Trailer module (AHM) — Not for US
20	Parking manoeuvre assist (PMA)
21	Vertical Dynamics Platform (VDP)
22	Tailgate function module (HKFM)
23	Blind spot detection (SWW)
24	Remote control service (FBD)
25	Rear view camera (RFK)
26	Power Control Unit (PCU)
27	Light Effect Manager (LEM)
28	Blind spot detection (secondary) (SWW2)
29	Video module (VM) — Not for US
30	Top Hi-Fi amplifier (AMPT)
31	Active Sound Design (ASD)
32	Rear climate control (Not for US)
33	Electric Active Roll Stabilization Rear (EARSH)
34	Rear axle slip angle control (HSR)
35	Seat module, driver, rear (SMFH)
36	Seat pneumatics module back left (SPNMHL)
37	Selective Catalytic Reduction (SCR) — Not for US
38	Front passenger seat module, rear (SMBFH)
39	Rear Seat Entertainment (RSE)

Index	Explanation
40	Seat pneumatics module front left (SPNMVL)
41	Wireless charging tray (WCA)
42	Driver's seat module (SMFA)
43	Gear selector switch (GWS)
44	Advanced Crash Safety Module (ACSM)
45	Transfer box
46	Instrument panel (KOMBI)
47	Optional equipment system (SAS)
48	Dynamic Stability Control (DSC)
49	Control unit for Top Rear Side View Camera (TRSVC)
50	Electronic transmission control (EGS)
51	Radar Sensor Left (RSL)
52	Front Light Electronics Left (FLEL)
53	Electric Active Roll Stabilization front EARSV
54	Active Cruise Control (ACC)

2.2. Gateway

2.2.1. Body Domain Controller (BDC)

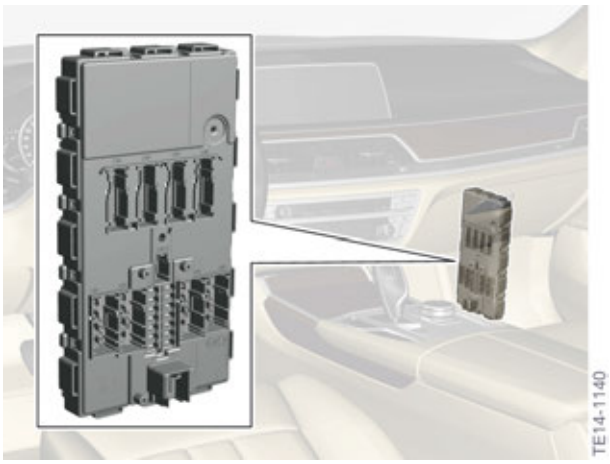

Body Domain Controller (BDC)

G12 Voltage Supply and Bus Systems
2. Control Units

BDC functions

The Body Domain Controller BDC is responsible for the following functions:

- Gateway
- Electronic immobilizer
- Terminal control
- Central locking system
- Exterior lights
- Power windows
- Horn
- Interior light
- Wiper and windshield washer system
- Vehicle data storage
- Data transfer for Condition Based Service (CBS)

Fuses in the BDC

The following components are protected by fuses in the BDC:

- Audio operating facility
- Operating facility for assist systems
- Operating unit for light
- Power windows
- Heated rear window
- Tailgate function module
- Integrated automatic heating / air conditioning
- OBD2 interface
- Power Control Unit
- Rain-light-solar-condensation sensor
- Steering column switch cluster
- Telematic Communication Box
- Outside door handle electronics
- Vertical dynamics platform (electronics)
- Central locking system

Relay in the BDC

The following relays are located in the BDC:

- Terminal 30F
- Power window regulators
- Central locking system
- Heated rear window
- Headlight cleaning system

Gateway in the BDC

The central gateway module (ZGM) is integrated in the BDC. It is viewed as a control unit within a control unit, in that the ZGM in the BDC behaves like an standalone control unit. The task of the ZGM is to connect all the data bus systems to each other. By connecting them in this way, it is possible to have and use information from the individual bus systems all in one location. The central gateway module is able to implement different protocols and speeds on other bus systems. The programming data for the control units are transmitted by Ethernet to the vehicle via the ZGM.

LIN controller in the BDC

The BDC is the gateway for the following components at the local interconnect network bus:

- Exterior mirrors left and right
- Switch block, driver's door, front passenger door
- Switch block, rear doors left and right
- Switch block, roller sunblind, rear doors left and right
- Steering column switch cluster
- Light switch
- Intelligent Safety button
- Audio operating facility
- Inside mirror
- Rain-light-solar-condensation sensor
- Roof function center (interior lighting)
- Comfort seat, rear passenger compartment, left and right
- Steering column adjustment
- Wiper
- Operating unit, center console
- Power distribution box, rear

The following control units are connected to the BDC via LIN, but the BDC has only a wake-up function and not a gateway or master function:

- Battery charging unit
- Intelligent battery sensor
- Electric fan
- Active air-flap control
- Digital Motor Electronics

2.3. Control units on the MOST bus

2.3.1. Head unit

Head unit

In addition to operation via the controller, the head unit can now be operated by touch via the CID in the G12. In the case of optional equipment gesture control, select functions can also be operated by means of gestures.

2.3.2. Hi-fi amplifier with MOST bus

The following amplifiers are used in the G12 corresponding to the audio systems:

- 7-channel amplifier without bus connection for Hi-Fi audio system
- 9-channel amplifier for Top Hi-Fi audio system
- 10-channel amplifier for High End audio system

Hi-Fi amplifier

7-channel amplifier without bus connection.

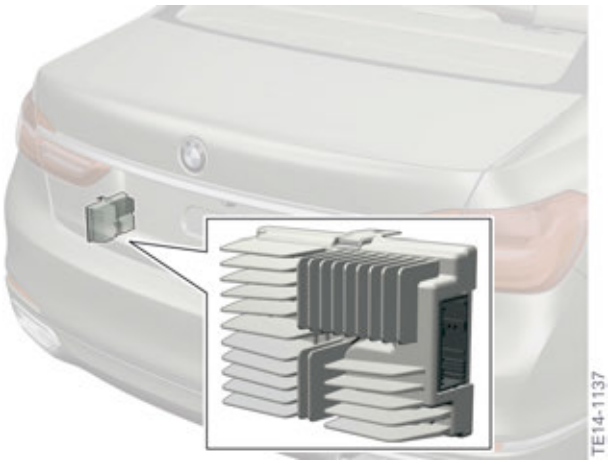

Hi-Fi amplifier

Top Hi-Fi amplifier

9-channel amplifier with MOST bus.

Top Hi-Fi amplifier

High End amplifier

10-channel amplifier with MOST bus.

High End amplifier

2.3.3. Rear seat entertainment (RSE)

Rear Seat Entertainment RSR

The Rear Seat Entertainment (RSE) in the G12 is equipped with a Blu-ray drive.

2.4. Control units on the K-CAN2

2.4.1. Roof function center (FZD)

Roof function center (FZD)

Depending on the vehicle equipment the roof function center (FZD) includes the corresponding components for:

- Alarm system
- Control of the slide/tilt sunroof
- Gesture recognition camera

On vehicles with gesture control, the gesture recognition camera is installed in the FZD. The gesture recognition camera is not shown as a control unit by the BMW diagnosis system. Diagnosis takes place via the FZD. The gesture recognition camera is connected to the PT-CAN4. As a result, the bus signals do not have to be forwarded to another CAN bus by the Body Domain Controller.

The FZD is not responsible for the control of the interior lighting. The interior light unit and the FZD electronics are located in the same housing.

2.4.2. Tailgate function module (HKFM)

Tailgate function module HKFM

The control unit for the tailgate function module is responsible for control of the tailgate lift.

2.4.3. Seat modules

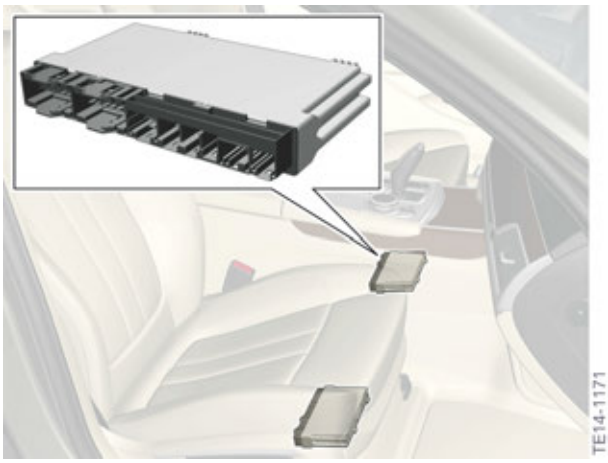

Seat module

The following seat modules are present corresponding to the vehicle equipment:

- Driver's seat module (SMFA)
- Front passenger seat module, (SMBF)
- Seat module, driver, rear (SMFH)
- Front passenger seat module, rear (SMBFH)

The seat modules are responsible for activation of the servomotors in the corresponding seat. Depending on the equipment, there may be 4 identical seat modules installed in the vehicle. Encoding of the control units takes place by connection to the wiring harness. The control unit is assigned correspondingly in the vehicle depending on the additional ground encoding.

2.4.4. Seat pneumatics modules

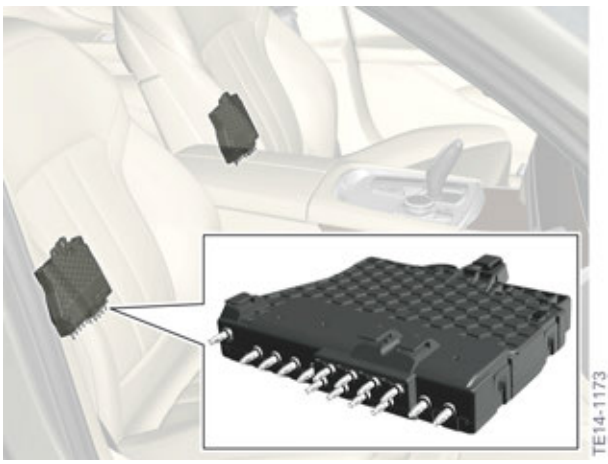

Seat pneumatics module back right SPNMHR

The following seat pneumatics modules are present corresponding to the vehicle equipment:

- Seat pneumatics module front left (SPNMVL)
- Seat pneumatics module front right (SPNMVR)
- Seat pneumatics module back left (SPNMHL)
- Seat pneumatics module back right (SPNMHR)

The seat pneumatics modules are responsible for the massage function in the corresponding seat. Depending on the equipment, there may be 2 or 4 identical seat pneumatics modules installed in the vehicle. Encoding of the control units takes place by connection to the wiring harness. The control unit is assigned correspondingly in the vehicle depending on the additional ground encoding.

2.5. Control units on the K-CAN3

2.5.1. Front Light Electronics

Front Light Electronics Right and Left

The control units Front Light Electronics Right (FLER) and Front Light Electronics Left (FLEL) are installed in the corresponding headlight.

The Front Light Electronics includes:

- LED activation in the corresponding headlight
- Activation of the stepper motor for the headlight beam throw adjustment

2.5.2. Rear view camera (RFK)

For the series introduction of the G12, a rear view camera on the K-CAN3 will be used. Changeover to Ethernet will take place at a later date.

2.5.3. Parking Manoeuvre Assist (PMA)

Parking manoeuvring assistant PMA

The PMA control unit performs the corresponding functions depending on equipment:

- Park Distance Control PDC (standard)
- Parking Manoeuvre Assist (SA5DP)

Park Distance Control (PDC) assists the driver when manoeuvring in and out of a parking space. The current distance from an obstruction is indicated by acoustic signals and on a visual display.

The Parking Manoeuvring Assistant makes it easier to park in parking spaces.

In a vehicle with Parking Manoeuvre Assist (PMA) all sensors of the Park Distance Control (PDC) are used. In addition, there is a sensor for the PMA in each case on the left and right of the front and rear bumper panels.

2.5.4. Blind spot detection (SWW)

blind spot detection SWW

Both control units for blind spot detection SWW (primary) and SWW2 (secondary) are shown in the picture. The SWW (primary) control unit is located on the right. The control unit SWW2 (secondary) is on the left.

The control unit for blind spot detection SWW is required for the following optional equipment:

- Driving Assistant Plus (Blind spot detection)
- Driving Assistant Plus II (Blind spot detection and Side collision warning)

The SWW is the primary control unit which is also used for diagnosis of the additional control units connected to the local CAN buses.

The following additional control units are required for the optional equipment Driving Assistant Plus:

- Radar Sensor Left
- Radar Sensor Right

2.6. Control units on the K-CAN4

2.6.1. Active Sound Design (ASD)

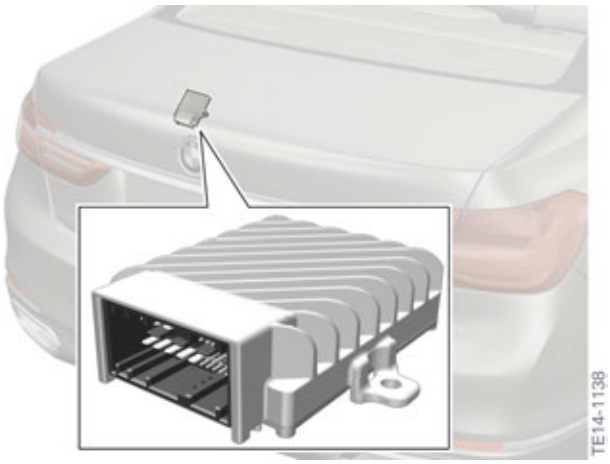

Active Sound Design ASD

The control unit for Active Sound Design generates the engine sound for the vehicle interior. The engine sound is calculated according to the programmed sound specification and various parameters such as the accelerator pedal angle (driver's desired load), engine speed and torque. It is then output via the vehicle's own audio system in the passenger compartment.

2.6.2. Controller (CON)

Controller CON

The controller with touchpad is used in the G12. In the touch control panel, the customer can input location information for the navigation system or telephone numbers and contact details. In the map operation the map section for example can be moved and enlarged or reduced by finger movement.

2.6.3. Integrated automatic heating / air conditioning (IHKA)

Integrated automatic heating / air conditioning (IHKA)

The integrated automatic heating/air conditioning system IHKA is standard equipment in the G12.

2.6.4. Light Effect Manager (LEM)

Light Effect Manager (LEM)

The control unit LEM is responsible for controlling the following lighting systems:

- Panorama glass roof
- Light Sabers on the B-pillars
- Speaker covers in the High End audio system

The LEM is also responsible for controlling the BMW Touch Command snap-in adaptor via LIN bus:

- Release and locking
- Lighting
- Charge conditions

2.6.5. Telematic Communication Box (TCB)

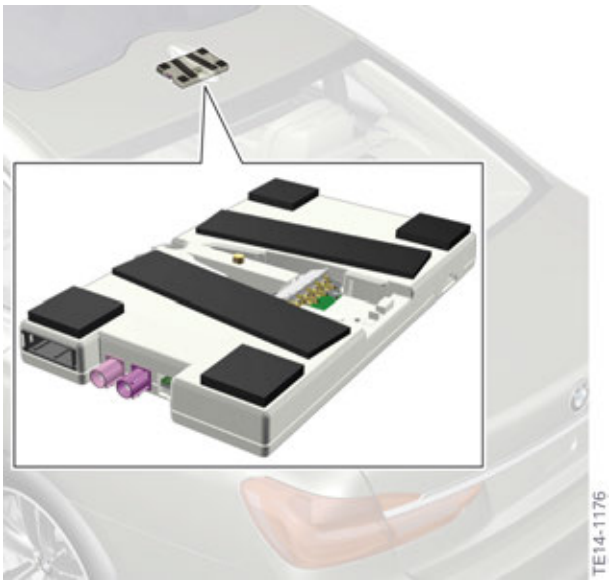

Telematic Communication Box (TCB)

The 2nd generation Telematic Communication Box (TCB2) is installed in the G12. The Telematic Communication Box (TCB2) is connected directly to the roof-mounted aerial and is responsible for the following functions:

- BMW Assist with eCall (emergency-call function)
- BMW Online
- BMW Internet using a SIM card integrated in the vehicle (P-SIM)
- Remote functions (reception and controller)
- "Speech-to-text" function in Office area
- BMW Tele Services via P-SIM

2.7. Control units on the K-CAN5

2.7.1. Remote control receiver (FBD)

Remote control receiver

The control unit remote control receiver (FBD) is responsible for communication of the remote control services. It receives the data of the wheel electronics for the tire pressure control.

The control unit FBD is not shown in the bus overview by the BMW diagnosis system ISTA. Diagnosis is performed via the Body Domain Controller.

2.7.2. Near Field Communication NFC

Near Field Communication NFC

The control unit Near Field Communication (NFC) is required for Near Field Communication in the vehicle.

The control unit NFC is not shown in the bus overview by the BMW diagnosis system ISTA. Diagnosis is performed via the Body Domain Controller.

2.7.3. Wireless charging tray (WCA)

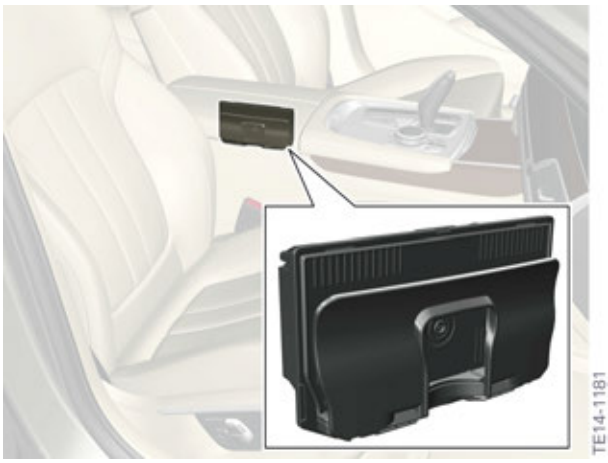

Wireless charging tray (WCA)

The control unit Wireless Charging Tray (WCA) monitors the charging tray and controls the charging procedure.

The control unit WCA is not shown in the bus overview by the BMW diagnosis system ISTA. Diagnosis is performed via the Body Domain Controller.

2.8. Control units on the Ethernet

2.8.1. Active Cruise Control (ACC)

Active Cruise Control ACC

The control unit Active Cruise Control for ACC Stop&Go is a radar-based sensor for sensing the area in front of the vehicle. Both the near and far ranges are monitored by one sensor.

2.8.2. Top Rear Side View Camera (TRSVC)

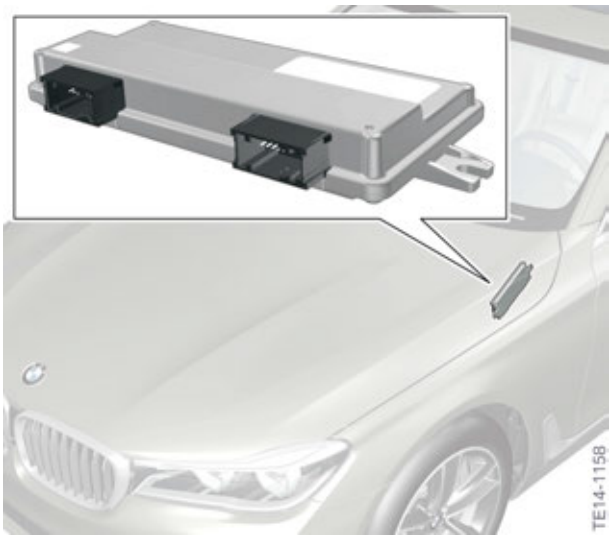

Top Rear Side View Camera (TRSVC)

The control unit Top Rear Side View Camera receives the picture information from the following cameras:

- Front camera
- Exterior mirror camera, left
- Exterior mirror camera, right
- Reversing camera

The cameras are connected to the TRSVC via Ethernet.

2.8.3. Camera-based driver support systems (KAFAS)

The control unit camera-based driver support systems (KAFAS) is required for the following optional equipment:

Camera-based driver support systems (KAFAS)

- Camera-based cruise control with Stop&Go function
- Traffic Jam Assist
- Road sign recognition
- Tailgate warning
- Person recognition with city braking function
- Collision warning with city braking function

2.9. Control units on the PT-CAN

2.9.1. Digital Motor Electronics DME, DME2

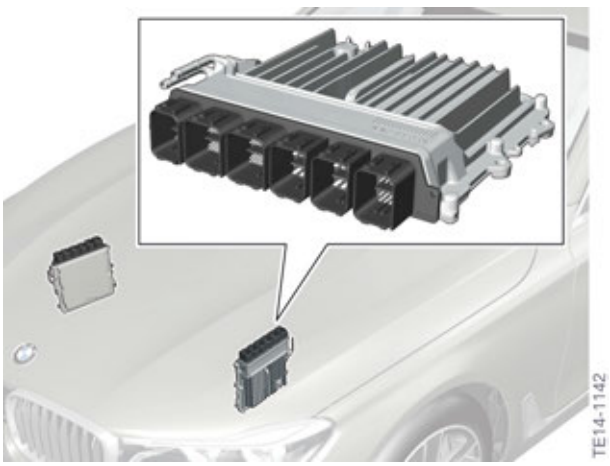

Digital Motor Electronics DME and DME2

The illustration shows the DME and DME2 control units. The DME2 control unit is on the left side (seen in the direction of travel).

The DME is responsible for the control of the combustion engine. In addition, the DME is the gateway between PT-CAN and PT-CAN2.

The DME control unit is installed for 6-cylinder engines.

The DME2 is an additional control unit installed for 8-cylinder engines.

2.9.2. High-beam assistant (FLA)

High-beam assistant (FLA)

On vehicles without camera-based driver assistance systems KAFAS, the control unit for the high-beam assistant is integrated in the interior mirror. On vehicles with KAFAS, the function of the high-beam assistant is performed by the camera-based assistance system.

2.9.3. Instrument panel (KOMBI)

Instrument panel KOMBI

Only one instrument cluster version is used in the G12:

- Dynamic digital instrument cluster with 12.3" TFT display

2.9.4. Night vision electronics NVE

Night vision electronics NVE

The control unit Night Vision Electronics receives picture information from the Night Vision camera. The picture information is transmitted via CVBS to the head unit and can be displayed in the CID if required.

2.10. Control units on the PT-CAN2

2.10.1. Electronic transmission control (EGS)

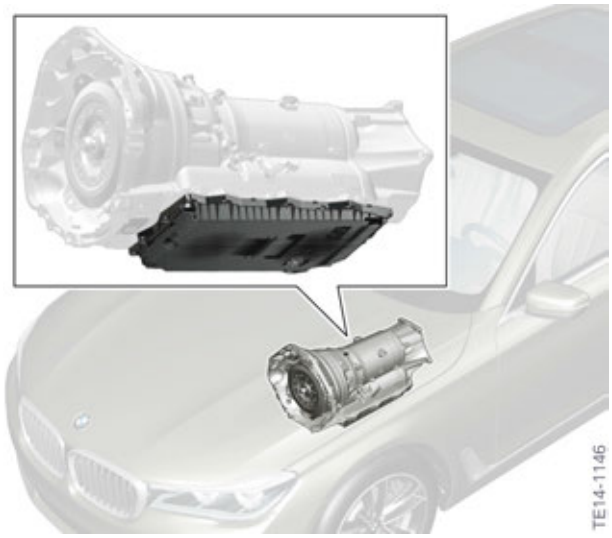

Electronic transmission control EGS

The control unit for electronic transmission control is installed directly in the automatic transmission.

2.10.2. Gear selector switch (GWS)

Gear selector switch GWS

The gear selector switch is used for selecting a drive position.

The bus connection is done via the PT-CAN2 and an additional local CAN to the electronic transmission control (EGS).

2.10.3. Power Control Unit (PCU)

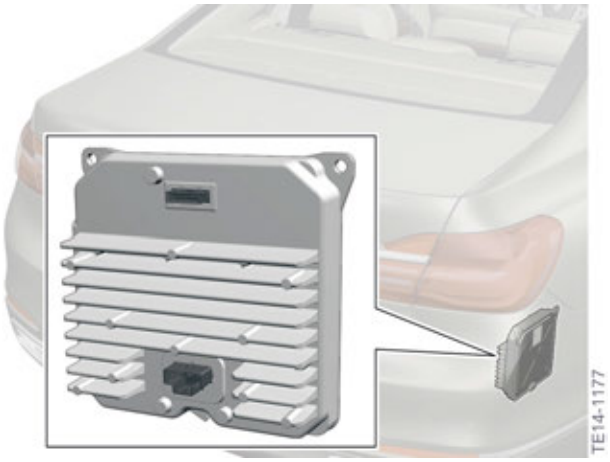

PCU

The Power Control Unit is required:

- For charging the auxiliary battery
- For supplying the vehicle electrical system with the auxiliary battery

The Power Control Unit (PCU) contains a DC/DC converter with a power of 500 W.

The preconditions for the direction of the energy management are calculated from the use of the vehicle. The auxiliary battery is charged by the PCU when the engine is running. During the phases in which the combustion engine is not running, e.g. automatic engine start-stop function, the PCU supplies energy from the auxiliary battery to the vehicle electrical system.

2.11. Control units on the FlexRay

2.11.1. Advanced Crash Safety Module (ACSM)

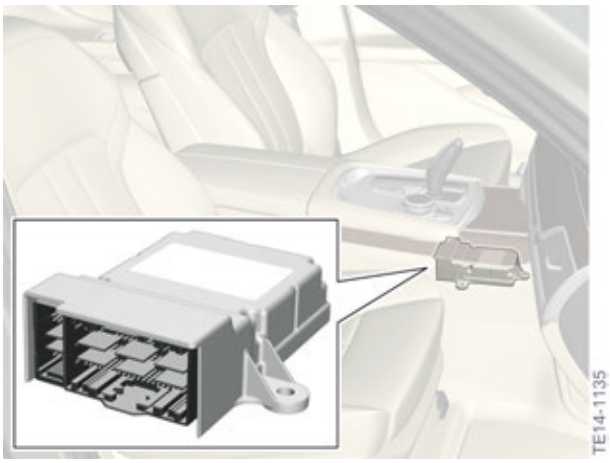

Crash Safety Module (ACSM)

The function of the Advanced Crash Safety Module (ACSM) is to permanently evaluate all sensor signals in order to identify a crash situation. The ACSM evaluates the information from the sensors and then forwards corresponding measures for selective activation of the necessary restraint systems.

The ACSM records the yaw rate and sends this information on the FlexRay data bus.

No additional yaw sensors are therefore required for the other systems.

2.11.2. Dynamic Stability Control DSC

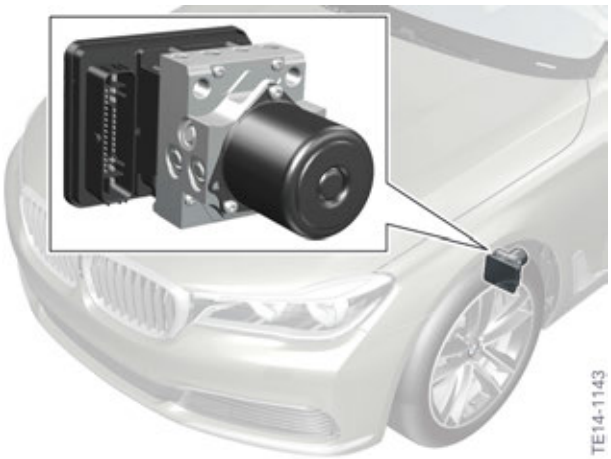

Dynamic Stability Control (DSC)

2.11.3. Electric Active Roll Stabilization

Electric Active Roll Stabilization front, EARSV

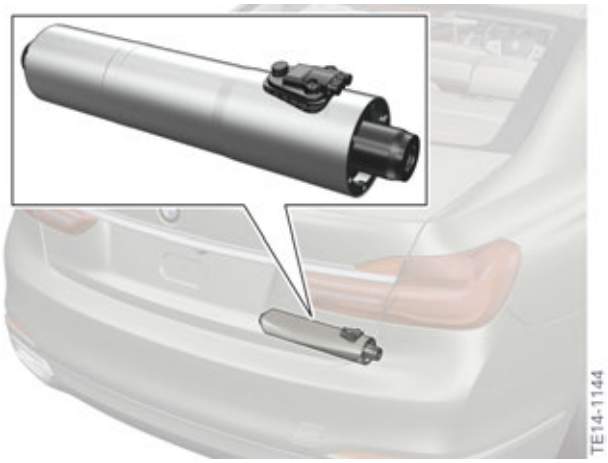

Electric Active Roll Stabilization rear, EARSH

The control units for Electric Active Roll Stabilization are installed directly in the corresponding actuator.

2.11.4. Electronic Power Steering (EPS)

Electronic Power Steering, EPS

The Electronic Power Steering (electromechanical power steering) is supplied with a voltage of 12 V or 24 V depending on the equipment and engine type.

An auxiliary battery, a separating element and a charging unit for the auxiliary battery are required for the 24 V version. These components are installed in the luggage compartment of the G12.

The steering angle information is determined by the EPS and made available to the other control units via the FlexRay bus.

2.11.5. Rear axle slip angle control (HSR)

Rear axle slip angle control HSR

The control unit for slip angle control is responsible for steering the rear axle.

2.11.6. Optional equipment system (SAS)

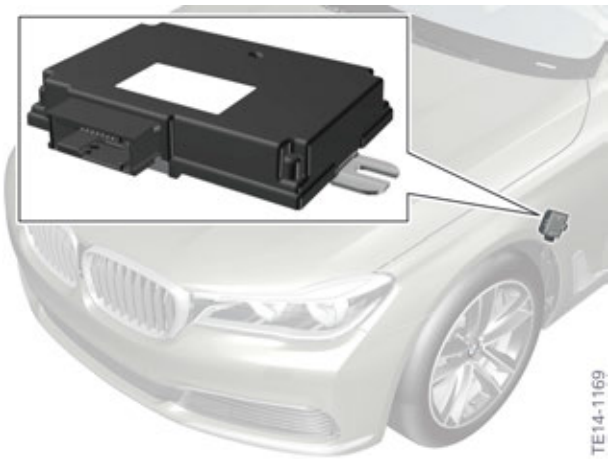

Optional equipment system (SAS)

The optional equipment system control unit provides a variety of driver assistance functions. The SAS does not have any installed sensors. The information needed for the functions is made available by the corresponding control units and sensors. The SAS activates the control units necessary for the corresponding function.

Possible functions:

- Collision warning with city braking function
- Cruise control with braking function
- Person recognition with city braking function
- Parking Manoeuvre Assist

- Traffic jam assist
- Camera-based cruise control with Stop&Go function
- Proactive driving assistant

The image information required by the optional equipment system is provided by the camera-based driver support systems.

2.11.7. Transfer box

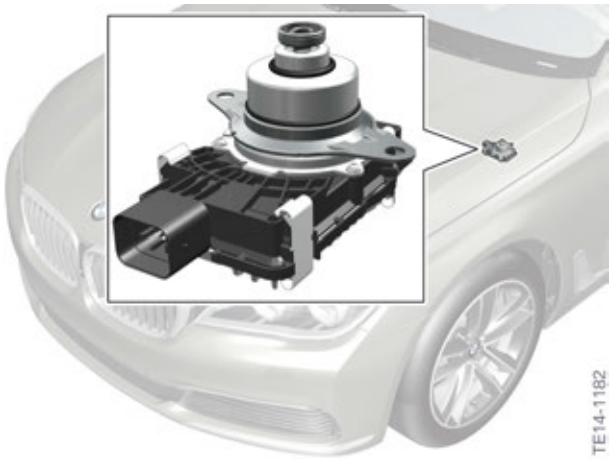

Transfer box

The control unit for the transfer box controls the clutch in the transfer box on vehicles with xDrive.

2.11.8. Vertical Dynamics Platform (VDP)

Vertical Dynamics Platform VDP

The control unit Vertical Dynamics Platform is required for the following equipment:

- Dynamic Damper Control
- Air Suspension

The VDP control unit tasks:

- Valve control in the shock absorbers
- Detection of vehicle ride heights by the ride height sensors
- Control of compressor and valves for the air suspension

2.12. Control units on the local CAN

The control units on the local CAN are not displayed in the bus overview by the BMW diagnosis system ISTA. Diagnosis takes place via the corresponding primary control unit.

2.12.1. Radar sensor

Radar Sensor Left RSL and Radar Sensor Right RSR

The control units Radar Sensor Right (RSR) and Radar Sensor Left (RSL) are installed at the front right and front left of the vehicle for the optional equipment Driver Assistance Plus II (Active Driving Assist Plus - SA5AT).

2.12.2. Blind spot detection (SWW2) (secondary)

Blind spot detection

Both control units for blind spot detection SWW (primary) and SWW2 (secondary) are shown in the picture. The SWW (primary) control unit is located on the right and the SWW2 (secondary) is on the left. The two control units are connected with each other via a local CAN. Diagnose with the BMW diagnosis system takes place via the primary control unit.

G12 Voltage Supply and Bus Systems

3. Voltage Supply

3.1. Overview of voltage supply

3.1.1. System wiring diagram

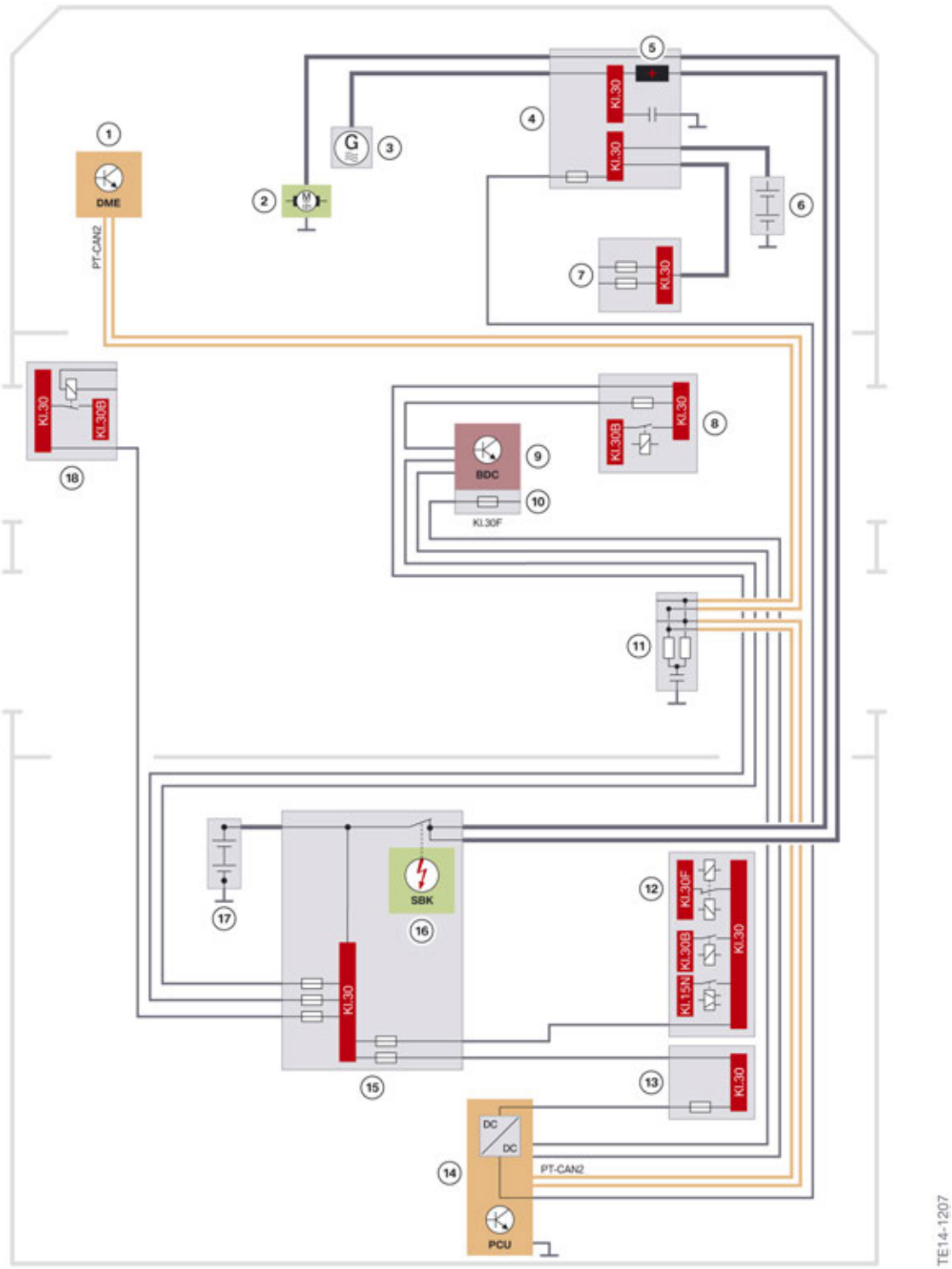

G12 Voltage Supply and Bus Systems

3. Voltage Supply

Index	Explanation
1	Digital Motor Electronics (DME)
2	Starter motor
3	Alternator
4	Power distribution box, engine compartment
5	Jump start terminal point
6	Auxiliary battery, engine compartment
7	Power distribution box, auxiliary battery, engine compartment
8	Power distribution box, front right
9	Body Domain Controller (BDC)
10	Fuse in the Body Domain Controller
11	CAN terminator
12	Power distribution box, rear
13	Fuse in the power distribution box, battery, right
14	Power Control Unit (PCU) 500 W
15	Battery power distribution box
16	Battery safety terminal
17	Battery
18	Power distribution box, front left

G12 Voltage Supply and Bus Systems

3. Voltage Supply

3.2. Components

3.2.1. Overview of luggage compartment

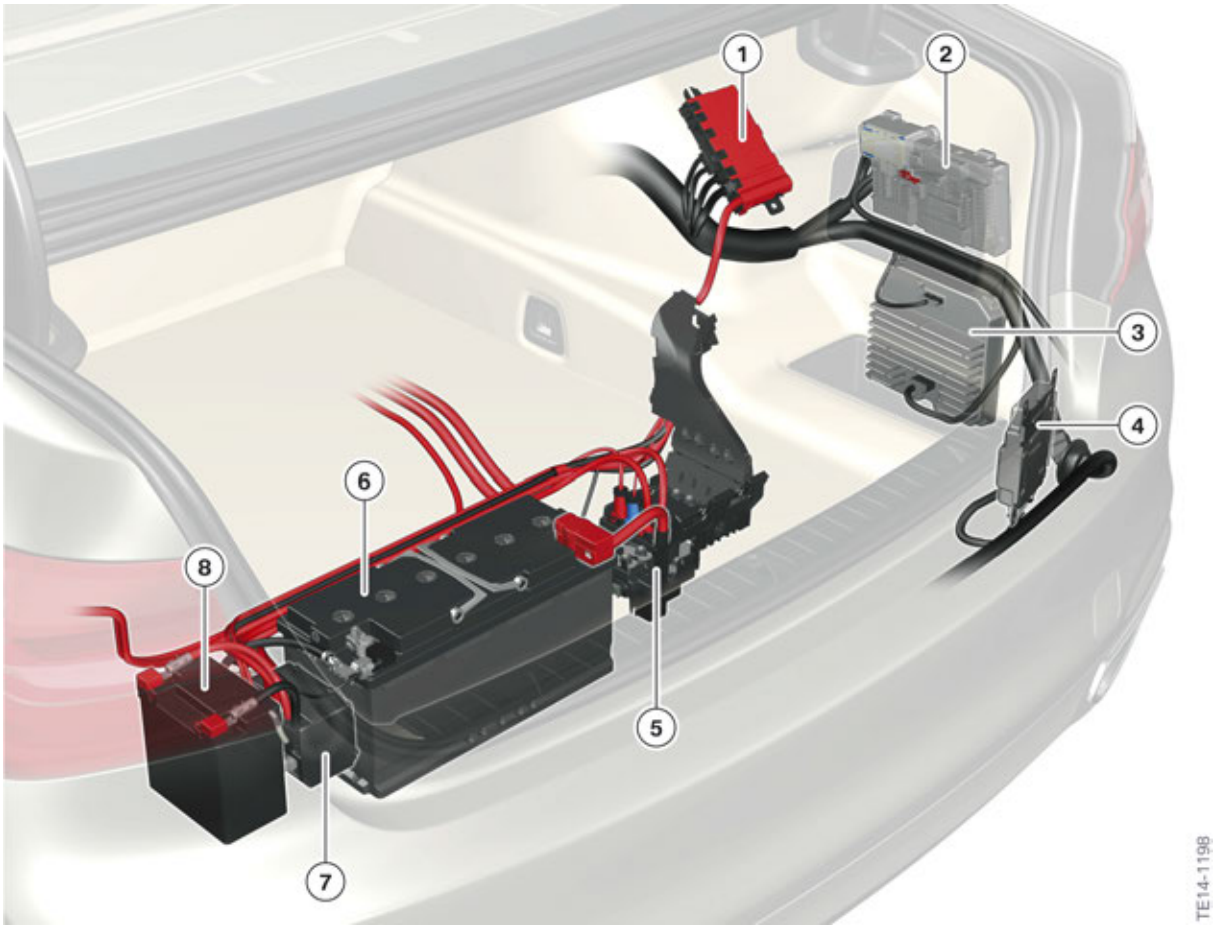

Battery

Index	Explanation
1	Power distribution box, battery, right
2	Power distribution box, rear
3	Power Control Unit (PCU) 500 W
4	Power Control Unit (PCU) 150 W
5	Power distribution box with Battery safety terminal
6	Battery
7	Separator
8	Auxiliary battery, luggage compartment

The vehicle battery in the G12 is a 105 Ah AGM battery.

3.2.2. Overview of engine compartment

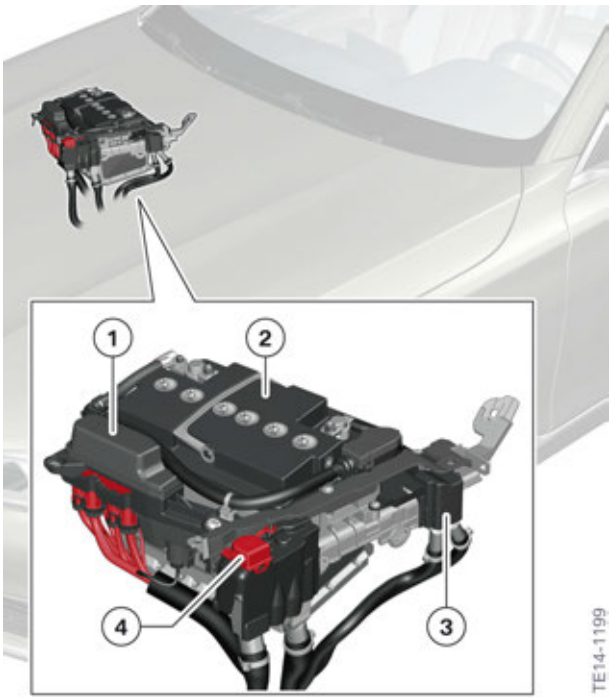

Auxiliary battery, engine compartment

Index	Explanation
1	Power distribution box, engine compartment
2	Auxiliary battery, engine compartment
3	Power distribution box, auxiliary battery, engine compartment
4	Jump start terminal point

3.2.3. Battery

AGM batteries are used for the voltage supply in the G12.

There may by 1, 2 or 3 batteries in the vehicle depending on the engine version and vehicle equipment.

- Starter battery in the luggage compartment with 105 Ah
- Auxiliary battery in the engine compartment with 60 Ah
- Auxiliary battery in the luggage compartment with 12 Ah for vehicles with 24 V steering

An auxiliary battery in the engine compartment is used on vehicles with Electric Active Roll Stabilization, the two anti-roll bar actuators are supplied with power by this battery. Also, it provides assistance for the vehicle electrical system during engine off conditions (MSA).

3.2.4. Intelligent battery sensor

The Intelligent Battery Sensor (IBS) records the following data of the 12 V battery:

- Voltage
- Current
- Pole temperature

The IBS performs the calculation and the evaluation of the information. The results are then forwarded to the superior control units via local interconnect network bus (DME and BDC).

3.2.5. Battery Safety Terminal

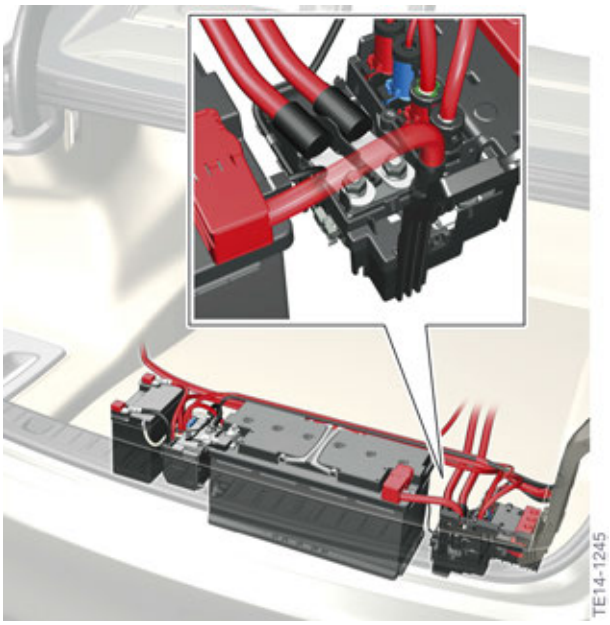

Battery safety terminal

The Battery Safety Terminal (BST) is activated in the event of an accident of corresponding severity. The voltage supply to the positive battery connection point in the engine compartment is interrupted and the consumers connected to this are de-energized. The Battery safety terminal is installed in the power distribution box next to the battery.

3.2.6. Alternator

Alternators with increased efficiency are used in the G12. The increase in alternator efficiency is achieved by reducing the losses in the rectifier. The loss-causing diodes are replaced by MOSFET transistors. A reduction in fuel consumption is achieved by increasing the efficiency.

Different alternators are used depending on the engine type and vehicle equipment.

Versions:

- Bosch with 180 A and 250 A for 6-cylinder engines
- Valeo with 252 A for 8-cylinder engines

3.2.7. Integrated supply module

Integrated supply module

The engine control and its components are supplied with a 12 V voltage via the integrated supply module.

3.2.8. Power distribution box, front right

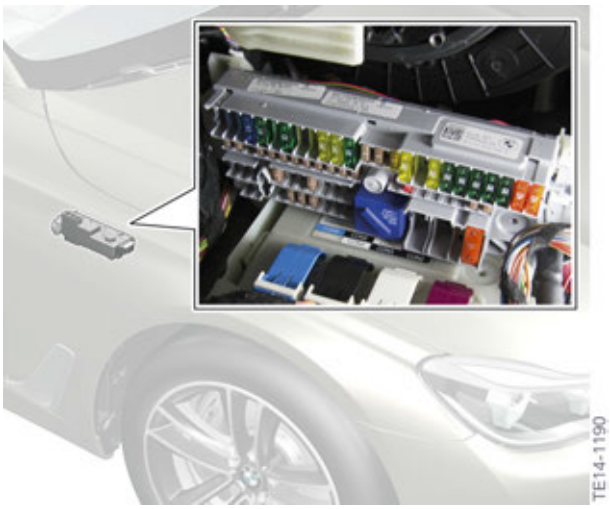

Power distribution box, front right

A relay for terminal 30B is installed in the front right power distribution box.

Consumers are supplied with terminal 30, terminal 30B and terminal 15N and provided with corresponding fuse protection by the front right power distribution box. Terminal 15N is supplied from the front power distribution box by the rear power distribution box.

3.2.9. Power distribution box, front left

Power distribution box, front left

A relay for terminal 30B is installed in the front left power distribution box.

The front left power distribution box supplies consumers with terminal 30 and terminal 30B as well as corresponding fuse protection.

3.2.10. Power distribution box, rear

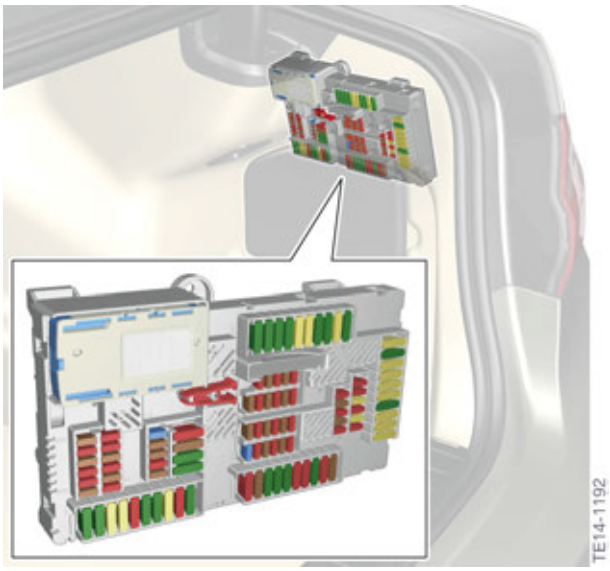

Power distribution box, rear

The following relays are installed in the rear power distribution box:

- 1 or 2 terminal 30F relays
- 2 terminal 30B relays
- 1 terminal 15N relay
- 1 relay for rear window heating

All relays are bi-stable relays. The relays area activated by the Body Domain Controller via LIN. The hard-wired terminal 30B relays of the two front power distribution boxes are activated via the rear power distribution box.

3.2.11. Body Domain Controller

The Body Domain Controller (BDC) is responsible for the terminal control.

A terminal 30F relay is installed in the BDC.

A number of consumers are supplied with terminal 30, terminal 30F, and provided with corresponding fuse protection via the BDC.

3.2.12. PCU with vehicle electrical system assistance measure

On vehicles with the equipment Electric Active Roll Stabilization, energy is supplied by the auxiliary battery in the engine compartment.

Modern vehicles have a high energy consumption due to the many electrical consumers. As a result, there is a high demand on the battery particularly in phases in which the combustion engine is not running and the alternator supplies no energy (e.g. engine start-stop phases).

In order to protect the battery, a DC/DC converter is installed in the Power Control Unit (PCU) and an auxiliary battery is installed in the engine compartment.

The preconditions for the direction of the energy management are calculated from the use of the vehicle. When the engine is running the auxiliary battery is charged from the conventional vehicle electrical system. During the phases in which the combustion engine is not running, e.g. automatic engine start-stop function, the conventional vehicle electrical system is supplied by the auxiliary battery.

The Power Control Unit (PCU) is connected to the PT-CAN2 and a DC/DC converter with a power of 500 W.

3.2.13. 24 V Electronic Power Steering

The higher weight 8-cylinder engine in the G12 results in a higher front axle load. This increases the effort that is required by the power steering servo. Due to these high currents, it is necessary to increase the voltage supply of the EPS to 24 V.

An auxiliary battery, separating element and a charging unit for the auxiliary battery are required for this. These components are installed in the luggage compartment of the G12.

The charging unit monitors the state of charge and charges the auxiliary battery using a DC/DC converter. It monitors a line shield of the 24 V line and various other conditions. The charging unit also switches the relay in the separating element, which integrates the auxiliary battery in the circuit. The EPS is supplied with 24 V only once this relay has been switched on. The EPS can also be operated with 12 V in the event of a fault.

G12 Voltage Supply and Bus Systems

3. Voltage Supply

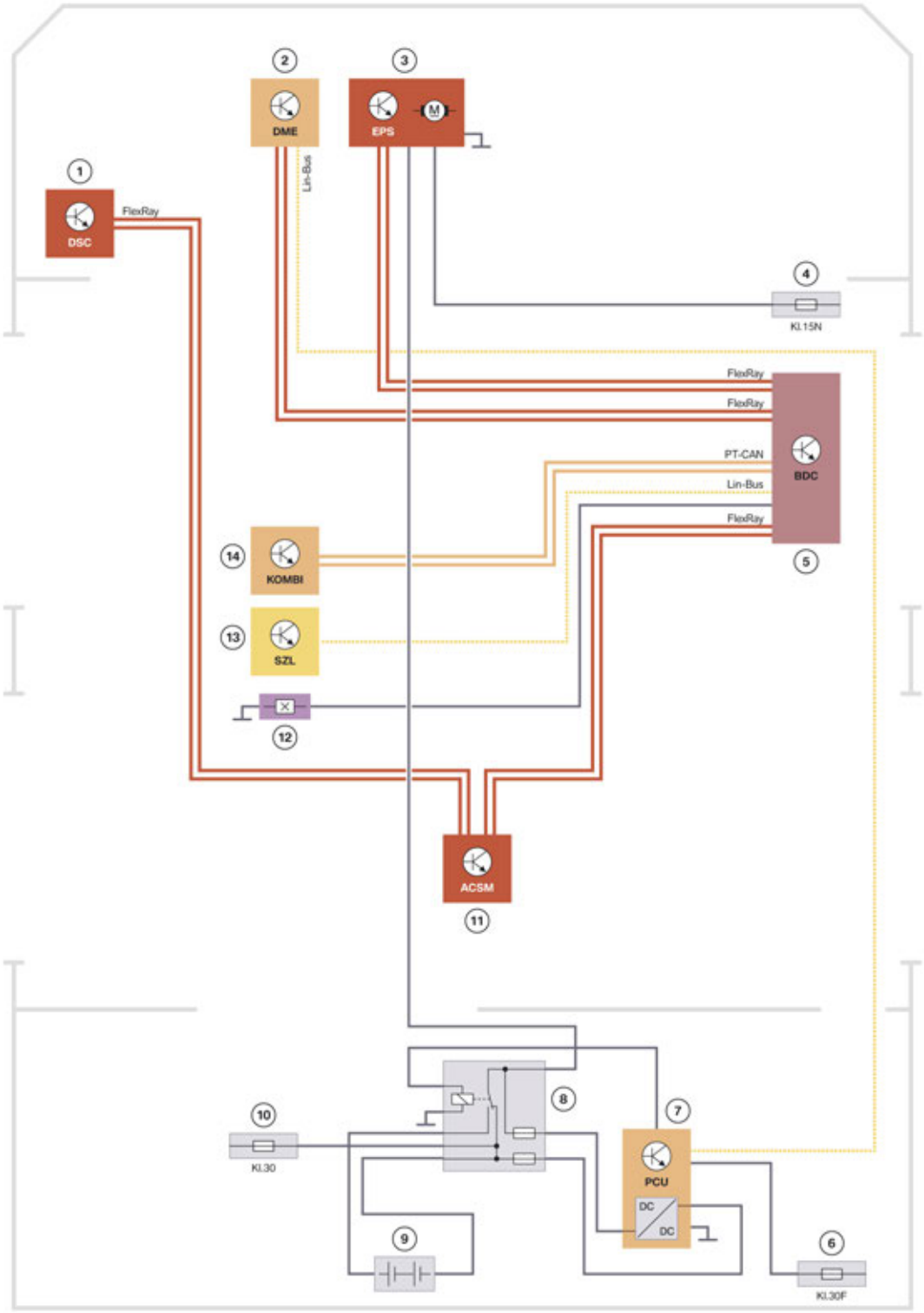

Voltage supply for 24 V steering

G12 Voltage Supply and Bus Systems

3. Voltage Supply

Index	Explanation
1	Dynamic Stability Control (DSC)
2	Digital Motor Electronics (DME)
3	Electronic Power Steering (electromechanical power steering) (EPS)
4	Fuse in the power distribution box, front right
5	Body Domain Controller (BDC)
6	Fuse in the rear power distribution box
7	Power Control Unit (PCU) 150 W
8	Separator
9	Auxiliary battery in the luggage compartment
10	Fuse in the power distribution box, battery
11	Advanced Crash Safety Module (ACSM)
12	Brake light switch
13	Steering column switch cluster (SZL)
14	Instrument panel (KOMBI)

Auxiliary battery with separating element

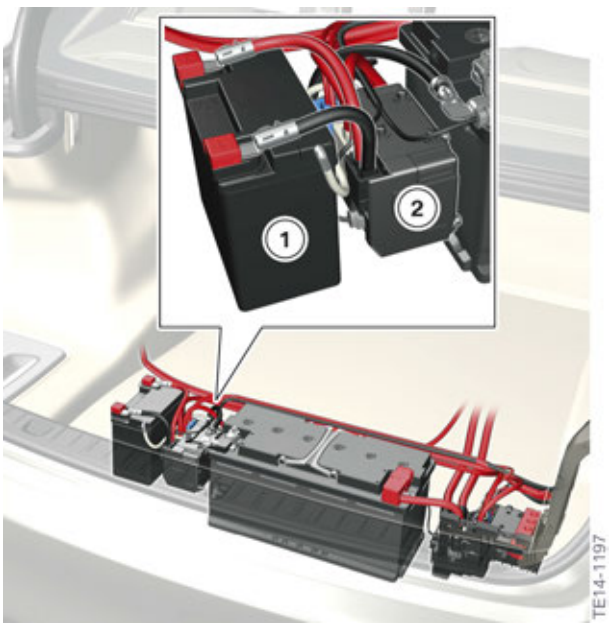

Battery and separating element

Index	Explanation
1	Auxiliary battery in the luggage compartment
2	Separator

G12 Voltage Supply and Bus Systems

3. Voltage Supply

Power Control Unit

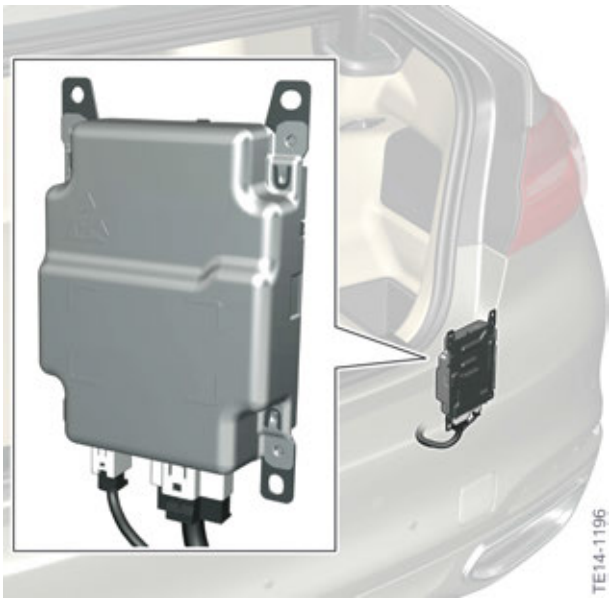

150 W Power Control Unit

The Power Control Unit monitors the state of charge and also charges the auxiliary battery using a DC/DC converter.

G12 Voltage Supply and Bus Systems
4. Terminal Control

The terminal control in the G12 is different from other BMW models. The terminals are controlled via a customer-oriented condition management. In the G12, based on the customer's point of view, the vehicle is always in the right condition. The terminal control is dependent on the driving conditions.

4.1. Vehicle conditions

The G12 vehicle may be in the following conditions:

- PARKING (asleep)
- RESIDING (awake)
- DRIVING (ready)

The different vehicle functions are possible corresponding to the respective conditions.

PARKING (asleep)

- Customer not in the vehicle
- Vehicle secured or not used for a certain time
- Vehicle functions cannot be operated

RESIDING (awake)

- Customer in the vehicle
- No driving readiness
- Functions that are relevant when the vehicle is stationary can be operated

DRIVING (ready)

- Customer in the vehicle
- Driving readiness established
- All functions are available

The driving conditions are changed by the condition management taking into account the customer behavior. Additional information is also evaluated to help determine the vehicle condition, e.g.:

- Door opening
- Door closing
- Operations in the vehicle

G12 Voltage Supply and Bus Systems

4. Terminal Control

The following diagram shows the changes between the vehicle conditions.

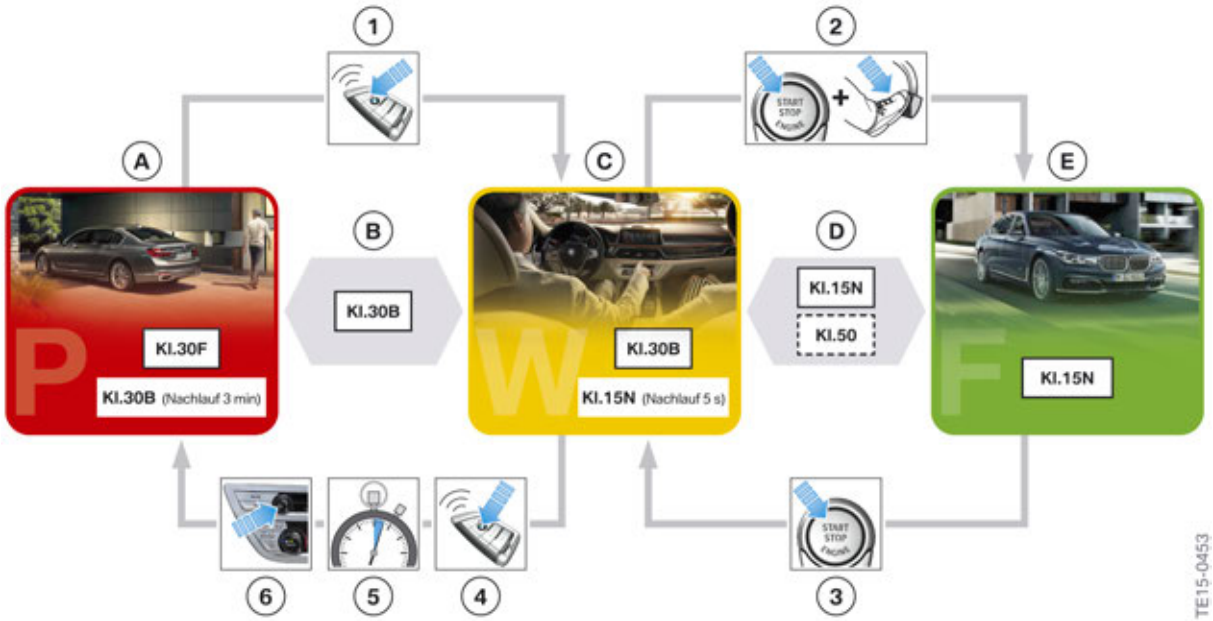

Vehicle conditions

Index	Explanation
A	Vehicle condition PARKING (asleep)
B	Transitional condition with stationary functions
C	Vehicle condition RESIDING (awake)
D	Transitional condition for establishing driving readiness or ending driving readiness or TESTING/ANALYSIS/DIAGNOSIS (PAD)
E	Vehicle condition DRIVING (ready)
1	Unlock vehicle
2	Operation of start/stop button + brake pedal
3	Press START-STOP button
4	Lock vehicle
5	No activity of a vehicle user detected for 3 minutes
6	Extended press

G12 Voltage Supply and Bus Systems

4. Terminal Control

Detailed overview of vehicle conditions.

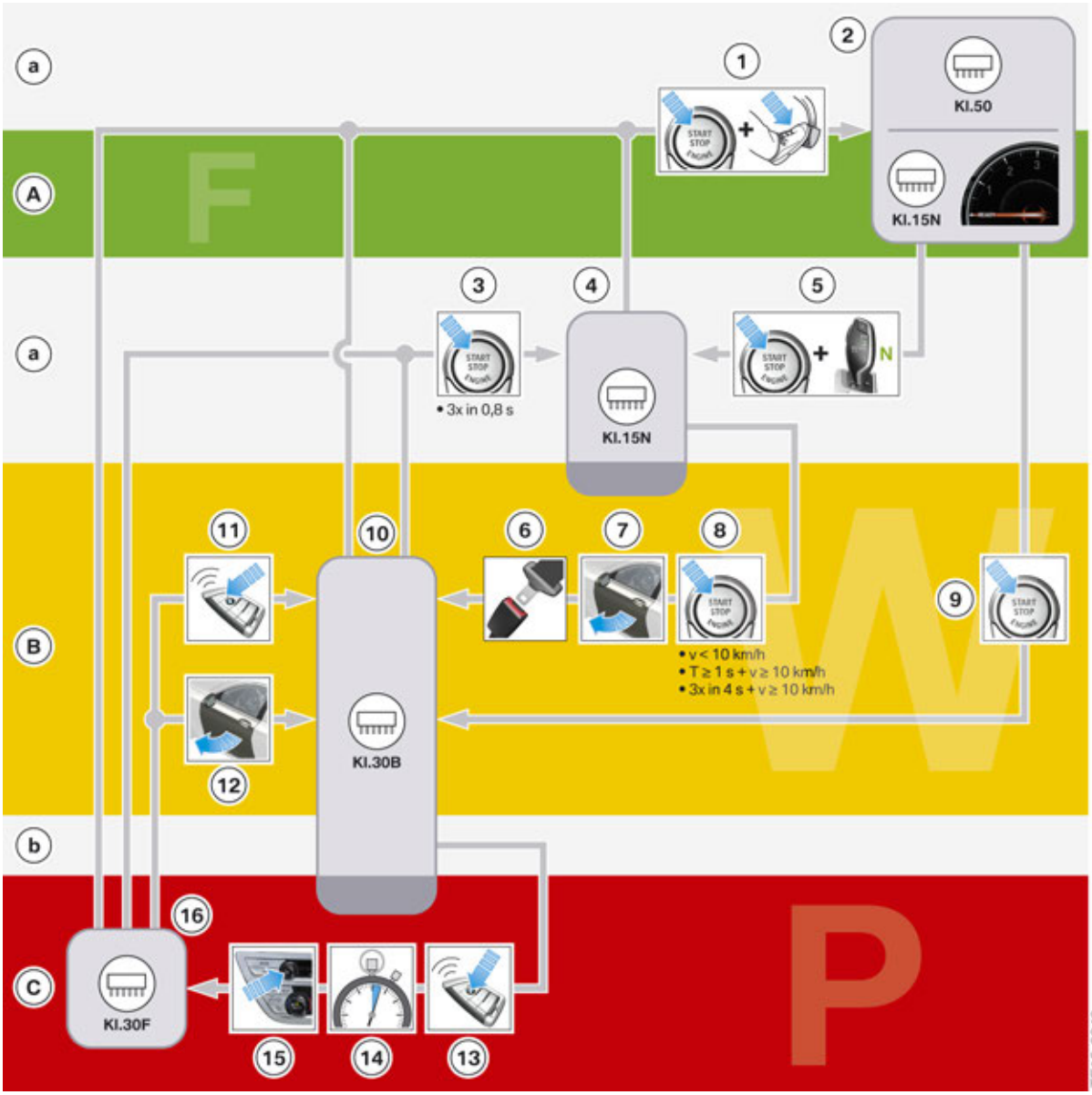

Overview of vehicle conditions

Index	Explanation
A	Vehicle condition DRIVING (ready)
B	Vehicle condition RESIDING (awake)
C	Vehicle condition PARKING (asleep)
a	Transitional condition for establishing/ending driving readiness —TESTING/ANALYSIS/DIAGNOSIS (PAD)
b	Transitional condition with STATIONARY FUNCTIONS

Index	Explanation
1	Operation of start/stop button + brake pedal + valid remote control or valid ID transmitter in the vehicle interior
2	Driving readiness established, terminal 15N (terminal 50)
3	Operation of start/stop button (three times within 0,8 s) + valid remote control or valid ID transmitter in the vehicle interior
4	Terminal 15N
5	Operation of start/stop button + selector lever in Neutral
6	Unbuckling driver's seat belt (v < 0.1 km/h, driver's door opened, selector lever not in Neutral, brake not pressed, low beam off, no OBD communication, no diagnosis mode, no assembly mode)
7	Door contact change (v < 0.1 km/h, driver's seat belt undone, selector lever not in Neutral, brake not pressed, low beam off, no OBD communication, no diagnosis mode, no assembly mode)
8	Press start/stop button + vehicle is stationary or press start/stop button for at least 1 s + driving speed ≥ 10 km/h or press start/stop button at least three times within 4 s + driving speed ≥ 10 km/h
9	Press START-STOP button
10	Terminal 30B
11	Unlock vehicle
12	Residing interaction or stationary function interaction
13	Lock vehicle
14	No customer interaction for 3 minutes
15	Extended press of head unit media button
16	Terminal 30F

4.2. Power supply terminals

Control units in the vehicle must be supplied with power only when they are needed. The following terminals are used in the G12:

- Terminal 15N
- Terminal 30B
- Terminal 30F
- Terminal 30

Terminal 15N supplies control units which are needed only when driving and which may be needed to safely end a journey. After-run of 5 s starts at the transition from DRIVING to RESIDING.

Terminal 30B is used to supply control units that are needed in the stationary mode RESIDING and for stationary functions where the customer is not in the vehicle. An after-run starts at the transition from RESIDING to PARKING and terminal 30B is then switched off.

Terminal 30F is used to supply control units which must perform functions in PARKING condition. Terminal 30F is normally switched on in PARKING condition, but may be switched off due to faults in the vehicle electrical system. The terminal is switched off with an after-running period of 1 min if a fault is detected.

Terminal 30 control units (e.g. alarm system) are always supplied with voltage and are also not switched off in the event of a fault.

	Terminal 30F	Terminal 30B	Terminal 15N
PARKING, vehicle electrical system not OK (fault in vehicle electrical system)	OFF	OFF	OFF
PARKING, vehicle electrical system OK	ON	OFF	OFF
Stationary functions, customer not in vehicle	ON	ON	OFF
RESIDING	ON	ON	OFF
DRIVING	ON	ON	ON

Testing Analysis Diagnosis (PAD)

The vehicle condition Testing/Analysis/Diagnosis is still present for diagnosis. All terminals are switched on in this mode. This ensures that diagnosis can be performed with all control units. This vehicle condition is displayed in the BMW diagnosis system.

4.3. Partial network operation

Today's premium vehicles contain up to 70 control units with well over 100 microcontrollers which are networked with each other. However, depending on the current vehicle condition or the vehicle user requirement, not all convenience and assistance systems need to be energized.

It is possible to save energy, relieve the load on the battery and also prolong the battery life by targeted deactivation and activation on control units which are not needed, so-called selective partial network operation.

If functions are not used or needed when driving, seat adjustment for example, the corresponding control units can be switched off.

In vehicles with combustion engines, the electrical energy consumption is indirectly linked to the fuel consumption via the alternator. As a result, selective deactivation of control units that are not currently needed can contribute to reducing fuel consumption and thus also CO_2 emissions.

4.3.1. Prerequisites for partial network operation

The partial network master in the Body Domain Controller calculates a partial network status on the basis of the current vehicle condition and the required functions. The control units that are not required are switched off by means of the corresponding bus messages.

4.3.2. Prerequisites of control units for partial network operation

Different transceivers are used in order to determine partial network operation in control units. These transceivers are able to evaluate and interpret messages. A control unit remains switched off as long as bus communication takes place without a valid wake-up event for the corresponding control unit. If a valid wake-up event for the corresponding control unit is sent on the bus, the transceiver can activate the voltage regulator of the microcontroller and the control unit starts up. The control unit is switched off by deactivation of the voltage regulator.

Bayerische Motorenwerke Aktiengesellschaft
Qualifizierung und Training
Röntgenstraße 7
85716 Unterschleißheim, Germany

Technical training.
Product information.

G12 Chassis and Suspension

Edited for the U.S. market by:
BMW Group University
Technical Training
ST1501 10/1/2015

BMW Service

General information

Symbols used

The following symbol is used in this document to facilitate better comprehension or to draw attention to very important information:

⚠

Contains important safety information and information that needs to be observed strictly in order to guarantee the smooth operation of the system.

Information status and national-market versions

BMW Group vehicles meet the requirements of the highest safety and quality standards. Changes in requirements for environmental protection, customer benefits and design render necessary continuous development of systems and components. Consequently, there may be discrepancies between the contents of this document and the vehicles available in the training course.

This document basically relates to left hand drive vehicles. Further differences may arise as the result of the equipment specification in specific markets or countries.

Additional sources of information

Further information on the individual topics can be found in the following:

- Owner's Handbook
- Integrated Service Technical Application.

Contact: conceptinfo@bmw.de

©2015 BMW AG, Munich

Reprints of this publication or its parts require the written approval of BMW AG, Munich

The information contained in this document forms an integral part of the technical training of the BMW Group and is intended for the trainer and participants in the seminar. Refer to the latest relevant information systems of the BMW Group for any changes/additions to the technical data.

Information status: **June 2015**
BV-72/Technical Training

G12 Chassis and Suspension

Contents

1. Introduction **1**
- 1.1. Development code 1
- 1.2. Chassis and suspension comparison 1
- 1.3. Overview of chassis and suspension 2
  - 1.3.1. Highlights 3

2. Axles **5**
- 2.1. Front axle 5
  - 2.1.1. Versions of the front axle support 8
  - 2.1.2. Notes for Service 8
- 2.2. Rear axle 11
  - 2.2.1. Notes for Service 12

3. Air Suspension **16**
- 3.1. Air supply system 19
  - 3.1.1. Technical data 23
  - 3.1.2. Solenoid valve block 24
- 3.2. Air suspension strut 25
- 3.3. Ride height sensor 27
- 3.4. Operating strategy 29
  - 3.4.1. High level 33
  - 3.4.2. Normal level 34
  - 3.4.3. Sport level 35
- 3.5. Notes for Service 36
  - 3.5.1. Lifting the vehicle 36
  - 3.5.2. Transport mode 37
  - 3.5.3. Bleeding the air suspension 37
  - 3.5.4. Filling the air suspension 37
- 3.6. System wiring diagram 38

4. Brakes **40**
- 4.1. Service brakes 41
  - 4.1.1. Brake design 41
  - 4.1.2. Pedal mechanism mounting 42
- 4.2. Parking brake 43
  - 4.2.1. Functions 46
  - 4.2.2. Brake test stand 47
- 4.3. Service information 48
  - 4.3.1. Service brakes 48
  - 4.3.2. Parking brake 49

G12 Chassis and Suspension

Contents

5. Wheels / Tires **50**
5.1. Puncture detection systems 51
5.2. Tire Pressure Monitor TPMS 51
5.2.1. Wheel electronics 53

6. Driving Stability Control **55**
6.1. Dynamic Stability Control (DSC) 58
6.1.1. Hydraulic circuit diagram 60
6.1.2. Functions 61
6.1.3. System wiring diagram 63
6.2. Steering 65
6.2.1. Steering wheel 66
6.2.2. Steering column adjustment 67
6.2.3. Version overview 68
6.2.4. Integral Active Steering 70
6.2.5. Service information 77
6.2.6. System wiring diagram 79
6.3. Electronic Damper Control (EDC) 84
6.3.1. Shock absorber design 84
6.3.2. System overview 86
6.3.3. Electrical shock absorber control 88
6.4. Anti-roll bar 91
6.5. Standard suspension 93
6.5.1. Chassis and suspension setup 93
6.6. Active Comfort Drive 94
6.6.1. Predictive control 97
6.6.2. Electric active roll stabilization (EARSV) 101
6.6.3. Control strategy 108
6.6.4. System wiring diagram of electric active roll stabilization EARSV 111

G12 Chassis and Suspension

1. Introduction

1.1. Development code

The new BMW 7 Series G12 will be launched on the market from October 2015.

In terms of the chassis and suspension, the new BMW 7 Series offers increased comfort without any compromises in driving dynamics.

1.2. Chassis and suspension comparison

Component	F01/F02	G12
Front axle	Double-wishbone front axle	Double-wishbone front axle
Front suspension	Steel springs	Air suspension
Front damping	Electronic Damper Control (EDC)	Electronic Damper Control (EDC)
Anti-roll bar, front	Conventional or hydraulic active stabilizer (ARS)	Conventional or electrical active stabilizer (EARSV)
Rear axle	Five-link rear suspension	Five-link rear suspension
Rear suspension	Steel springs or rear air suspension (optional equipment in the F01)	Air suspension 2 axle
Rear damping	Electronic Damper Control (EDC)	Electronic Damper Control (EDC)
Rear anti-roll bar	Conventional or hydraulic active stabilizer ARS	Conventional or electrical active stabilizer EARSV
Front brake	Brake discs up to dia. 348 mm	Brake discs up to dia. 374 mm
Rear brakes	Brake discs up to dia. 345 mm	Brake discs up to dia. 345 mm
Parking brake	Drum brakes with electromechanical parking brake EMF	Disc brakes with combined brake caliper for the electric parking brake
Wheels/tires	Run-flat tires (RSC)	Run-flat tires (RSC)
Tire Pressure Monitor (TPMS)	TPMS	TPMS
Steering	Electronic Power Steering or Integral Active Steering	Electronic Power Steering or Integral Active Steering

G12 Chassis and Suspension

1. Introduction

1.3. Overview of chassis and suspension

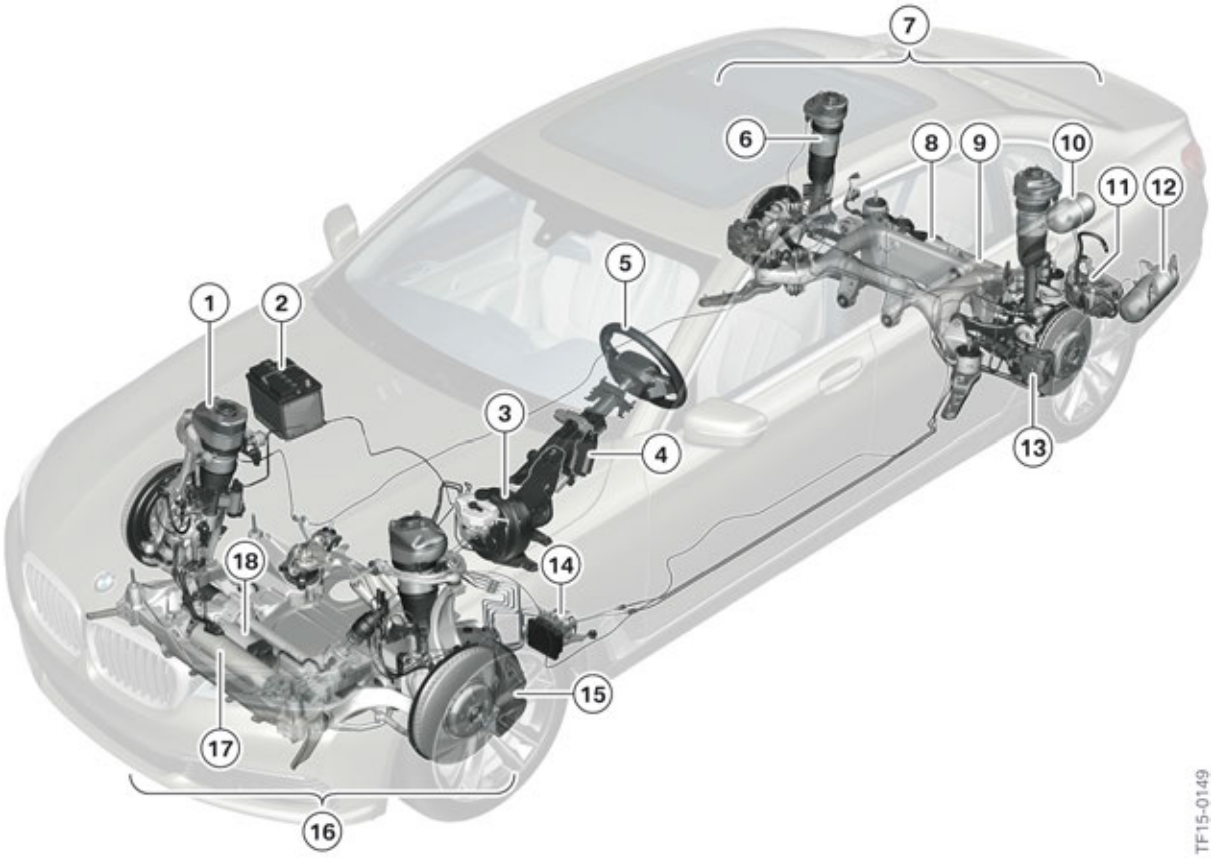

Overview of chassis and suspension in the G12

Index	Explanation
1	Air suspension strut, front axle
2	12 V battery (for EARSV)
3	Brake servo
4	Steering column adjustment
5	Steering wheel
6	Air suspension strut, rear axle
7	Five-link rear axle (HA5)
8	Rear axle slip angle control (HSR) (optional equipment)
9	Electric active roll stabilization rear EARSV (optional equipment)
10	Pressure accumulator 2 liters
11	Air supply system of two-axle ride level control
12	Pressure accumulator 4 liters
13	Disc brake with integrated parking brake for the rear axle

G12 Chassis and Suspension

1. Introduction

Index	Explanation
14	Dynamic Stability Control (DSC)
15	Disc brake for front axle
16	Double-wishbone front axle
17	Electric active roll stabilization front EARSV (optional equipment)
18	Electronic Power Steering (electromechanical power steering) (EPS)

The following table shows a comparison of the chassis and suspension on the G12.

	G12	
	Rear-wheel drive	**Four-wheel drive**
Wheelbase	3210 mm	3210 mm
Turning circle*	12.8 m	12,9 m
Ground clearance	135 mm	135 mm
Maximum vehicle height	1505 mm	1505 mm
Minimum vehicle height	1475 mm	1475 mm
Vehicle height at normal level	1485 mm	1485 mm
Vehicle height at high level	1505 mm	1505 mm
Vehicle height at sport level	1475 mm	1475 mm

*The turning circle values refer to vehicles with basic steering.

1.3.1. Highlights

The following table shows the different equipment specifications in the area of the chassis and suspension for the G12.

Systems	Basic chassis and suspension	Integral Active Steering	Active Comfort Drive
Electronic Power Steering (EPS)	X		
EPS with variable rack geometry		X	
Rear axle slip angle control (HSR)		X	
Two-axle ride level control	X		
Electronic Damper Control (EDC)	X		
Front axle anti-roll bar	X		
Rear axle anti-roll bar	X		
Electric active roll stabilization front (EARSV)			X
Electric active roll stabilization rear (EARSV)			X

G12 Chassis and Suspension

1. Introduction

Systems	Basic chassis and suspension	Integral Active Steering	Active Comfort Drive
Wheel acceleration sensors			X
Stereo KAFAS camera			X
Auxiliary battery (12 V)		X	X

The following optional equipment is available in addition to the basic chassis and suspension:

- Integral Active Steering
- Active Comfort Drive

Both equipment options can be combined with each other and are available for all drive variants (also xDrive). It was possible to reduce the carbon dioxide emissions and increase the control dynamics through complete electrification of the two optional equipment systems. In the customer's perception, this is expressed in a lower fuel consumption with increased comfort as well as a sportier driving feeling.

The driver can influence the control characteristics of the different suspension control systems by means of the driving experience switch. Further information on this is provided in the Technical Training Manual “G12 Driver Assistance Systems”.

G12 Chassis and Suspension

2. Axles

2.1. Front axle

The double-wishbone front axle offers optimum alignment of the camber of the front wheels in relation to the roadway in every driving situation. During the compression and rebound movements, a wheel therefore always has exactly the camber value that guarantees optimum transfer of cornering forces in relation to the roadway. This ensures excellent tire contact with the road and the tire is able to transfer high lateral forces. The attainable high lateral acceleration forces are thus possible without the otherwise necessary firm chassis and suspension setup.

With the double-wishbone front axle, the shock absorber does not perform any wheel control tasks. This means that the shock absorber are practically free of lateral forces and can react sensitively to road bumps.

Since the double-wishbone front axle has a small kinematic lever arm, disturbance variables such as road joints or potholes generate only a small torque about the steering axis.

The sum of all advantages means that the double-wishbone front axle makes it possible to resolve the conflict of goals between comfort and sportiness.

G12 Chassis and Suspension

2. Axles

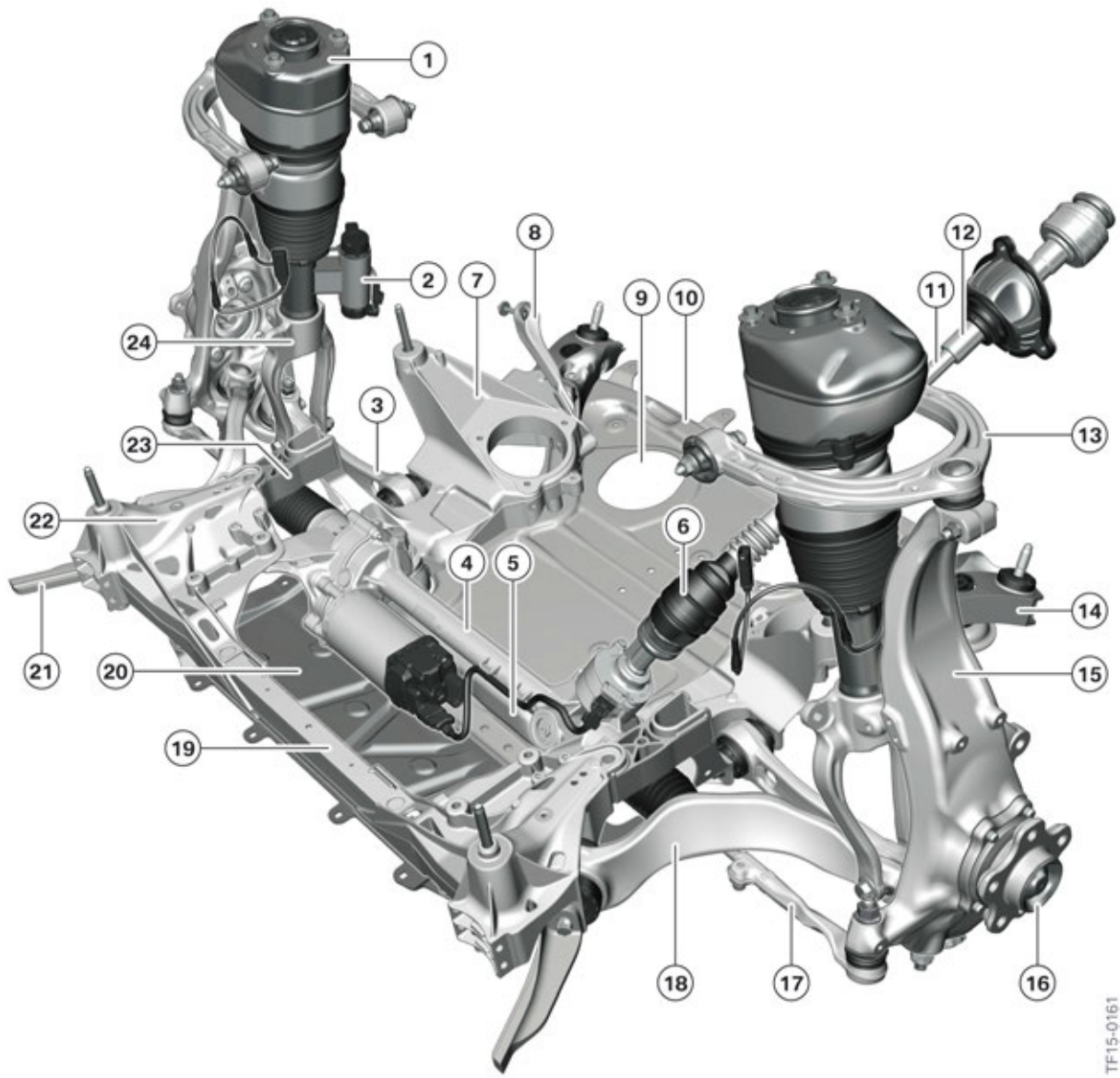

Overview of front axle on G12 with xDrive

Index	Explanation
1	Support bearing on air suspension strut
2	Actuator for Electronic Damper Control (EDC)
3	Wishbone, bottom
4	Steering box
5	Cross member
6	Universal joint of steering shaft to steering gear
7	Cast side section
8	Strut

Index	Explanation
9	Service opening
10	Rear stiffening plate
11	Steering shaft
12	Universal joint of steering shaft to steering column
13	Triangle wishbone, top
14	Side member
15	Swivel bearing
16	Wheel bearing unit
17	Track rod head
18	Trailing link
19	Transverse tube
20	Front service flap
21	Lever
22	Cast corner
23	Cast corner connection
24	Spring strut holder

In order to achieve the lowest possible vehicle weight, the front axle components are made almost completely from aluminium.

The design of the double-wishbone front axle offers the following advantages:

- High agility due to absorption of high lateral acceleration forces.
- Outstanding roll stabilization when cornering without any reduction in ride comfort.
- Comfortable, good spring response of the axle and good directional stability.
- High comfort due to minimum influence of disturbance variables.

In addition to ensuring driving dynamics and ride comfort, the double-wishbone front axle also performs various crash functions. The front axle support is part of the crash structure of the body and forms an additional load path. This ensures that the increased requirements relating to pedestrian protection are met.

⚠

Driving without a stiffening plate is not permitted due to the resultant lack of vehicle stability.

G12 Chassis and Suspension

2. Axles

2.1.1. Versions of the front axle support

Two different front axle supports are used depending on the vehicle equipment.

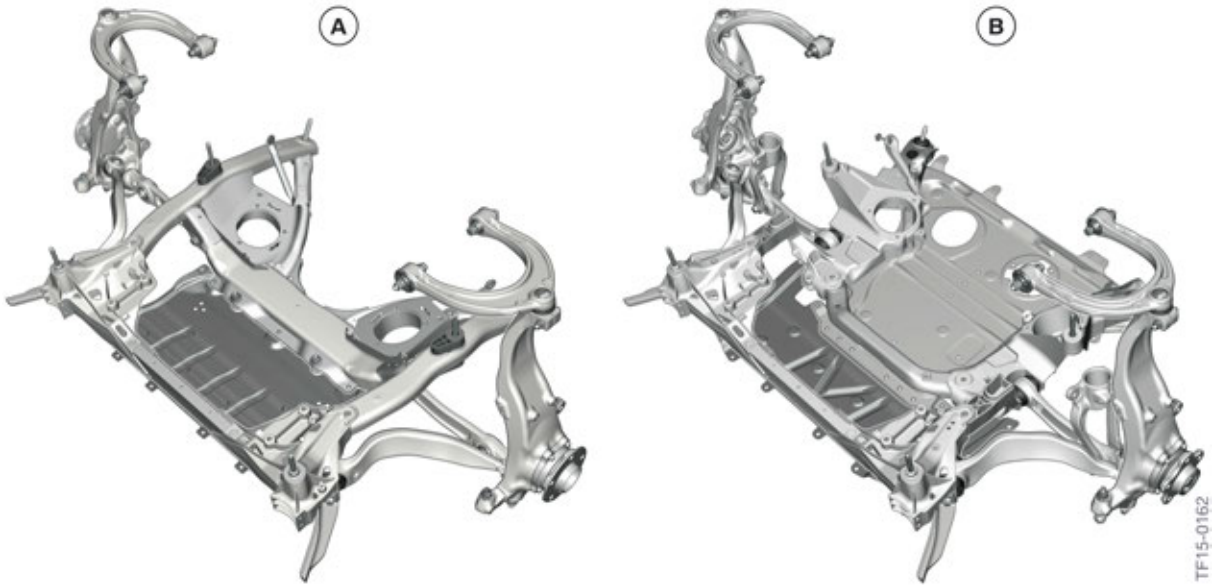

Versions of the front axle support in the G12

Index	Explanation
A	Rear-wheel drive sDrive
B	All-wheel drive xDrive

2.1.2. Notes for Service

Two different wishbones are available to Service for camber correction.

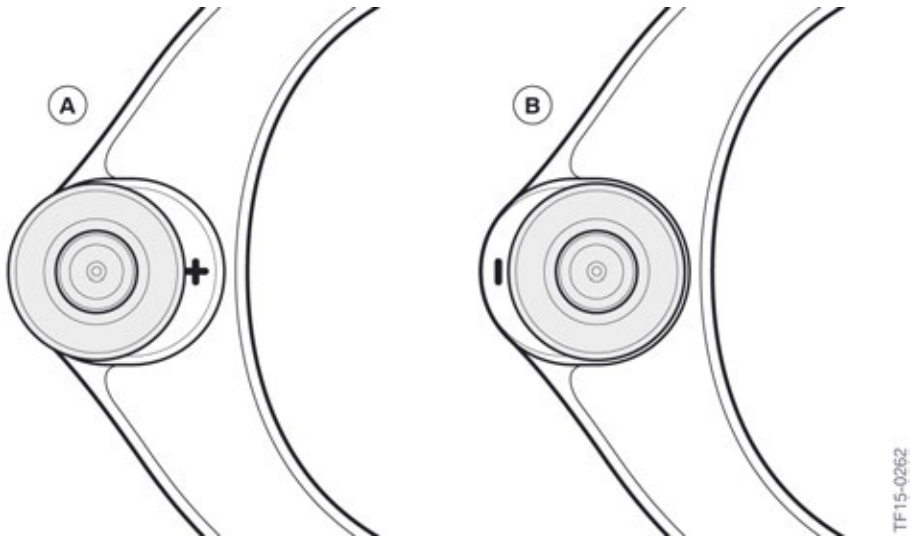

Camber correction by upper wishbone in the G12

G12 Chassis and Suspension

2. Axles

Index	Explanation
A	Camber correction by upper wishbone +30 min
B	Camber correction by upper wishbone -30 min

In order to avoid damage to the ball bearing on the upper wishbone, it must be ensured when performing disassembly or assembly work that the deflection angle of the ball joint does not exceed a value of 55°.

The following table shows when wheel alignment is necessary on the front axle when a component is replaced.

Replacement of a component on the front axle	Wheel alignment required
Front axle support	YES
Steering box	YES
Wishbone, bottom	YES
Rubber mount for wishbone, bottom	YES
Trailing link	NO
Rubber mount for trailing link	NO
Triangle wishbone, top	NO
Rubber mount for upper wishbone	NO
Track rod	YES
Swivel bearing	YES
Wheel bearing	NO
Air suspension strut	NO
Support bearing	NO

The following table shows when wheel alignment is necessary on the front axle when a component is undone.

Undoing the screw connection at the front axle	Wheel alignment required
Front axle support to body	NO
Steering box to front axle support	YES
Bottom wishbone to front axle support	YES
Bottom wishbone to swivel bearing	NO
Trailing link to front axle support	NO
Trailing link to swivel bearing	NO
Upper wishbone to body	NO

G12 Chassis and Suspension

2. Axles

Undoing the screw connection at the front axle	Wheel alignment required
Upper wishbone to swivel bearing	NO
Track rod to steering box	NO
Track rod end to track rod	YES
Track rod end to swivel bearing	NO
Spring strut to bottom wishbone	NO
Support bearing to body	NO
Bottom steering shaft to steering box	NO
Upper steering shaft to steering column	NO

G12 Chassis and Suspension

2. Axles

2.2. Rear axle

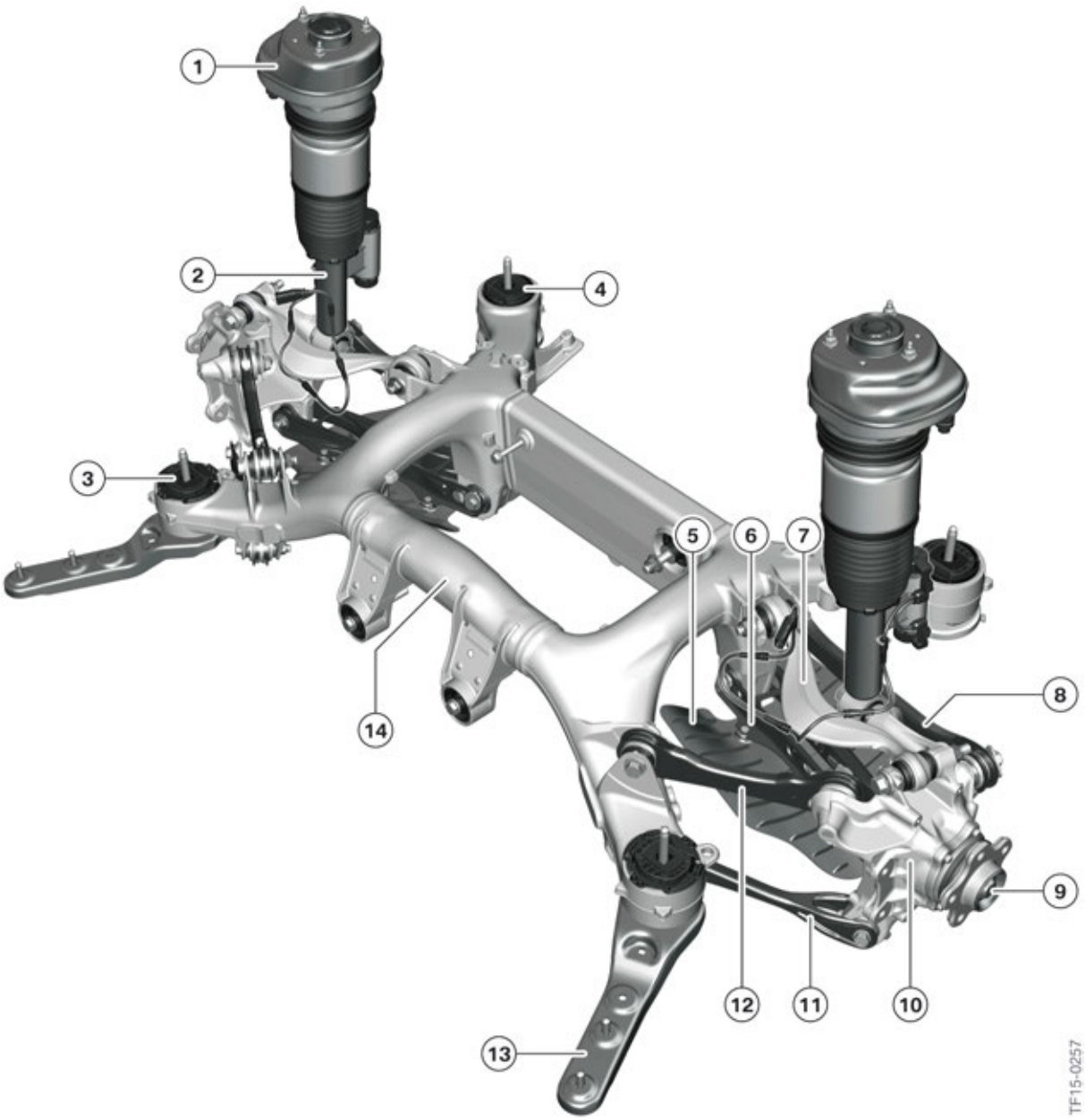

Overview of rear axle in the G12

Index	Explanation
1	Support bearing
2	Air suspension strut
3	Front rubber mount
4	Rear rubber mount
5	Air deflector

Index	Explanation
6	Camber control arm
7	Wishbone
8	Camber link
9	Wheel bearing unit
10	Wheel carrier
11	Trailing arm
12	Control arm
13	Compression strut
14	Axle support

The five-link rear axle of the G12 is characterized by precise wheel guidance, which comes into its own in various driving situations, such as during load reversals or the transition from cornering to straight-ahead driving. In addition, the five-link rear axle offers very high comfort in combination with sporty driving dynamics.

It was possible to resolve this conflict of goals by means of the following measures:

- Double flexible rear-axle rubber mounts
- High structural rigidity of the rear axle support
- Large support area of the rear axle support

It was possible to keep the unsprung masses of the five-link rear axle low through the use of an aluminium wheel carrier as well as various forged aluminium and sheet steel control arms.

Clever definition of the kinematic points as well as precise design of the ball joints and rubber mounts result in a large spring travel range in combination with optimum wheel guidance. The small acting lever arms ensure particularly good insensitivity to bumps in the road. The extremely rigid control arms as well as the torsion-free rear axle support and body connections realized by means of compression struts result in extremely precise wheel guidance.

The air deflectors under the control arms minimise swirl and thus increase the efficiency of the vehicle.

2.2.1. Notes for Service

The following table shows when wheel alignment is necessary on the rear axle when a component is replaced.

Replacement of a component on the rear axle	Wheel alignment required
Rear axle support	YES
Rubber mount for rear axle support	YES
Camber control arm	YES
Camber link	YES
Trailing arm	YES

G12 Chassis and Suspension

2. Axles

Replacement of a component on the rear axle	Wheel alignment required
Wishbone	YES
Ball joint in the wheel carrier	YES
Control arm	YES
Wheel carrier	YES
Wheel bearing	NO
Air suspension strut	NO
Support bearing	NO

The following table shows when wheel alignment is necessary on the rear axle when a component is undone.

Undoing a component on the rear axle	Wheel alignment required
Rear axle support to body	YES
Front compression strut to body	NO
Camber link to rear axle support	YES
Camber control arm to wheel carrier	YES
Camber link to rear axle support	YES
Camber link to wheel carrier	NO
Trailing arm to rear axle support	YES
Trailing arm to wheel carrier	YES
Control arm to rear suspension subframe	YES
Control arm to hub carrier	NO
Wishbone to rear axle support	NO
Wishbone to wheel carrier	NO
Air suspension strut to wheel carrier	NO
Support bearing to body	NO

G12 Chassis and Suspension

2. Axles

Rear axle positioning

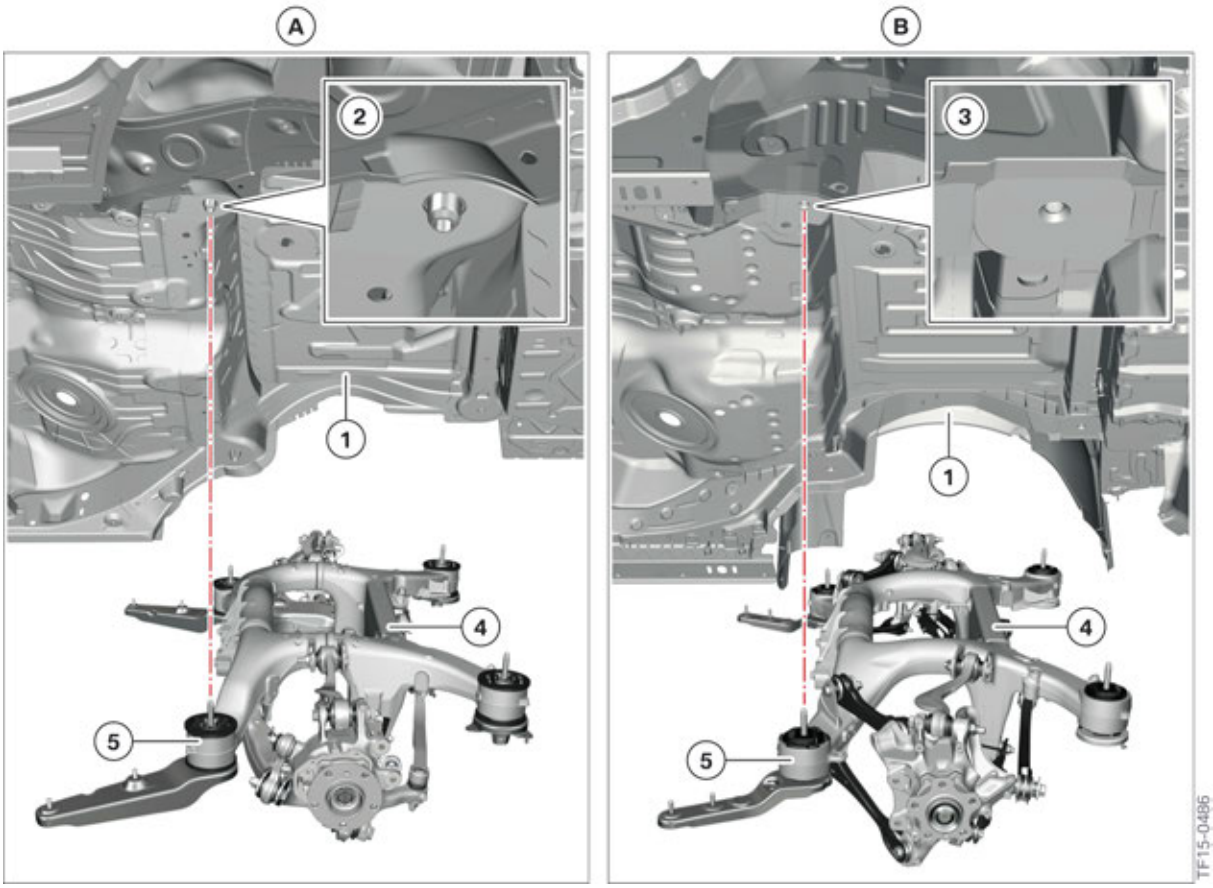

Comparison of rear axle on the F01/F02 with the G12

Index	Explanation
A	Rear axle of the F01/F02
B	Rear axle of the G12
1	Body
2	Centering mounting for rear axle support
3	Mounting for rear axle support
4	Rear axle support
5	Rubber mount of the rear axle support

On the G12, no centering mountings are used on the body for alignment of the rear axle. This makes it possible to ensure during assembly that the rubber mounts of the rear axle are screwed to the body completely without any tension. Bumps in the road are isolated and are not transmitted to the body due to direct contact of the rubber mounts.

New special tools are used for removal and assembly of the rear axle support. The rear axle support is held in the correct position for installation by means of 2 guide pins. For the detailed procedure, refer to the current repair instructions.

G12 Chassis and Suspension

2. Axles

Centering tool for removing and installing the rear axle in the G12

Index	Explanation
1	Centering pin for longitudinal and transverse directions (x- and y axes)
2	Centering pin for longitudinal direction (y-axis)

Basic alignment of the rear axle support is ensuring by the centring pin for longitudinal and transverse directions. Due to the permitted production tolerances of the rear axle support, the support is positioned only in longitudinal direction by the second centring pin.

An incorrect procedure for positioning the rear axle support can lead to problems during wheel alignment.

G12 Chassis and Suspension

3. Air Suspension

In order to guarantee uniform ride comfort independently of the load status, the G12 is equipped as standard with air suspension on the front and rear axles. The two-axle ride level control of the G12 is offered only in combination with electrically controlled shock absorbers.

The air suspension increases the ride comfort. The system performs adjustment mainly at standstill, e.g. in order to compensate for a change in height due to the vehicle load. The inertia of the system means that it cannot react to driving dynamics disturbance variables, which may occur when the vehicle is driven quickly on twisting roads. Dynamic control when driving serves only to compensate for changes in height due to a falling fuel tank volume as well as temperature changes of the air in the air suspension struts.

The air suspension offers the following advantages:

- Increase in driving safety, since the self-levelling suspension automatically keeps the height of the vehicle body at a predefined nominal ride-level in all load states.
- High ride comfort due to automatic adaptation of the oscillation behavior to the vehicle weight.
- Increased customer benefit through manual level adjustment by means of the ride height selection switch.

G12 Chassis and Suspension

3. Air Suspension

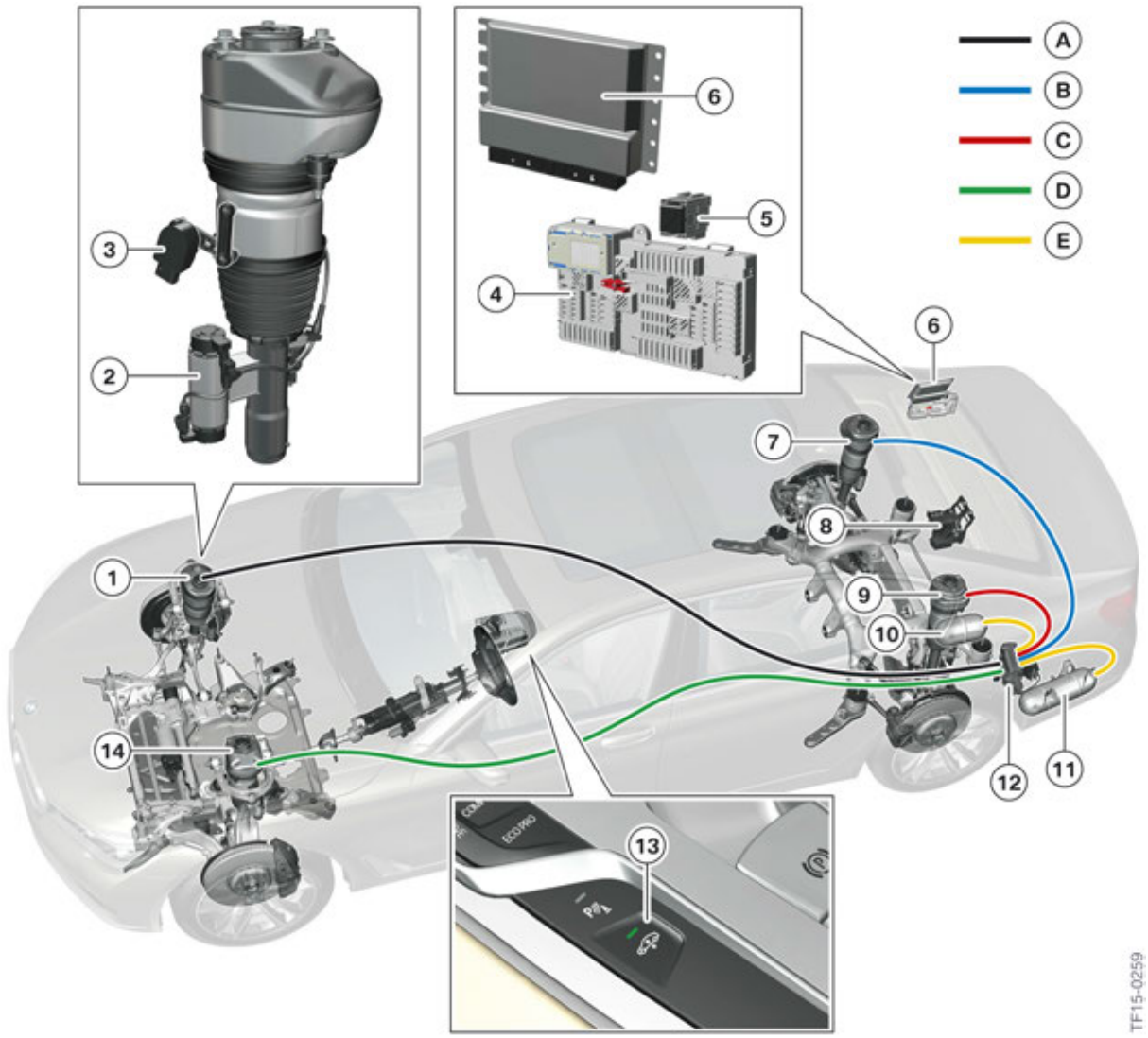

System overview of two-axle ride level control in the G12

Index	Explanation
A	Compressed air line, front right (color code black)
B	Compressed air line, rear right (color code blue)
C	Compressed air line, rear left (color code red)
D	Compressed air line, front left (color code green)
E	Compressed air line for pressure accumulator (color code yellow)
1	Air suspension strut, front right
2	EDC valve, front right (Electronic Damper Control)
3	Ride height sensor, front right
4	Rear right power distribution box
5	Relay for air supply system

Index	Explanation
6	Vertical Dynamics Platform (VDP) (central control unit)
7	Air suspension strut, rear right
8	Positive battery terminal distributor
9	Air suspension strut, rear left
10	Pressure accumulator 2 liter
11	Pressure accumulator 4 liter
12	Air supply system
13	Ride height selection switch
14	Air suspension strut, front left

The central control unit for controlling the air suspension is the Vertical Dynamics Platform (VDP). The Vertical Dynamics Platform (VDP) control unit reads in the current ride height values by means of the 4 ride height sensors. The Vertical Dynamics Platform (VDP) activates the solenoid valves of the solenoid valve block in order to perform control actions.

Control actions at standstill and at low vehicle speeds (0 – 20 km/h / 0– 12 mph) are achieved by using the storage volume of the two pressure accumulators. For control actions when driving (> 20 km/h / >12 mph), the required compressed air is not taken from the pressure accumulator, but is generated by the compressor and forwarded directly to the corresponding air suspension struts. In exceptional situations, the compressor can also be switched on when the vehicle is at standstill.

The increase in volume in the air suspension strut lifts the vehicle body. Achievement of the nominal ride-level height is detected by the 4 ride height sensors and activation of the corresponding solenoid valves is interrupted. Three-point control is used for processing in order to avoid frequent re-adjustment. The rear axle is controlled individually by means of both ride height sensors. In the case of the front axle, the corresponding ride height is adjusted on the basis of a mean value.

The compressed air lines have different colors in order to avoid confusion during servicing work on the solenoid valve block. The following table contains an overview of the color codes.

Color code	Component
Yellow	Pressure accumulator
Black	Air suspension strut, front right
Green	Air suspension strut, front left
Blue	Air suspension strut, rear right
Red	Air suspension strut, rear left

G12 Chassis and Suspension

3. Air Suspension

3.1. Air supply system

The air supply system is made up of the following components:

- Electrical compressor
- Solenoid valve block
- Holder with vibration damper

The air supply system has the task of generating the required compressed air and coordinating the air flows between the electrical compressor, pressure accumulators and the 4 air suspension struts corresponding to the requirements. The calculations required for this are performed by the Vertical Dynamics Platform (VDP).

For package reasons, the system comprises two separate pressure accumulators with a total volume of 6 liters and a maximum storage pressure of 17.5 bar. A total volume of 105 liters is available to the system at maximum pressure.

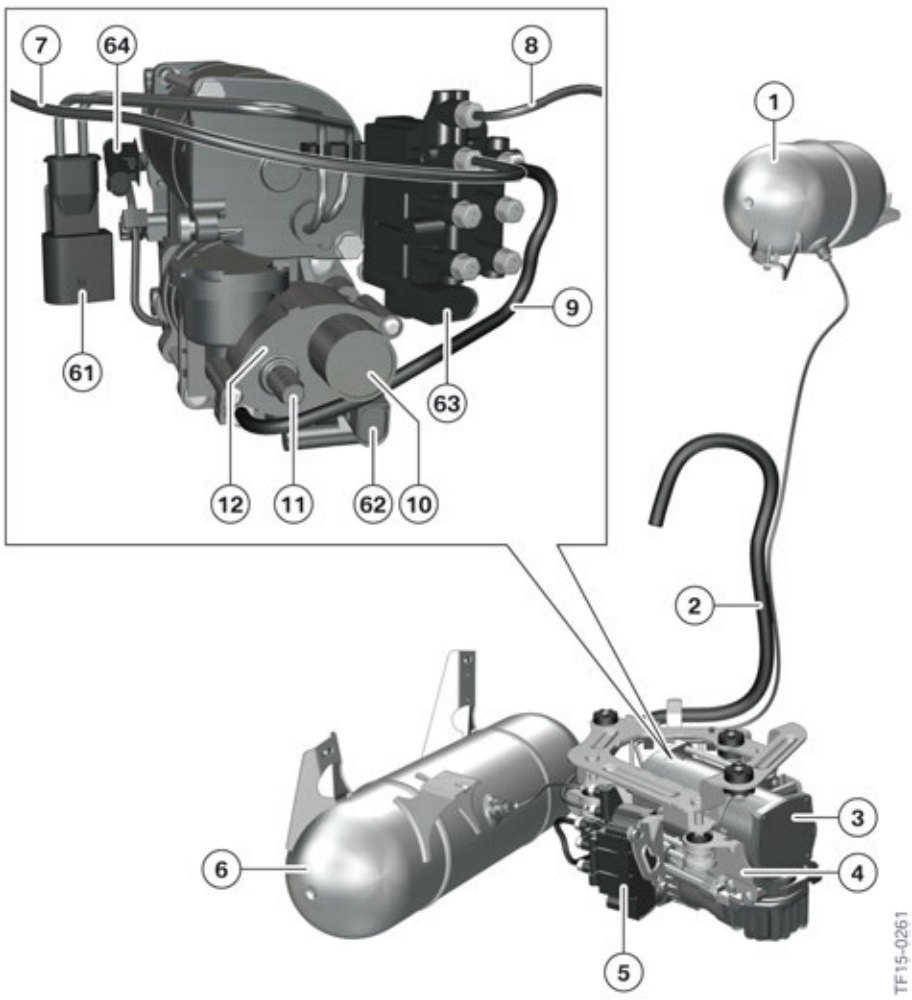

Air supply system of the G12

3. Air Suspension

Index	Explanation
1	Pressure accumulator 2 liters
2	Air intake hose
3	Electrical compressor
4	Holder with vibration damper
5	Solenoid valve block
6	Pressure accumulator 4 liters
7	Compressed air line for pressure accumulator 2 liters
8	Compressed air line for pressure accumulator 4 liters
9	Compressed air line for air supply to solenoid valve block
10	Ventilation to atmosphere
11	Connection for air intake hose
12	Housing cover for air cleaner
61	Plug-in contact for electrical air compressor
62	Plug-in contact for electrical drain solenoid valve
63	Plug-in contact for solenoid valve block
64	Plug-in contact of temperature sensor

The electrical compressor is switched via a relay. The relay is activated by the Vertical Dynamics Platform (VDP). In order to prevent vibrations from being transmitted into the vehicle interior when the compressor is running, the air supply system is secured to the vehicle body by means of a holder with vibration dampers.

To prevent the driver from being irritated by the start-up noises of the compressor, this is switched on almost exclusively while driving. The compressor can also be switched on at vehicle standstill if the following preconditions are all met:

- Vehicle condition Residing/Awake
- Sufficient vehicle voltage
- Ride height – 40 mm of the initializes value
- Insufficient pressure in the pressure accumulator for control

The intake air is cleaned by the air cleaner upstream of the compressor and dried by the air drier downstream of the compressor. Cleaning is necessary so that the valves are protected against soiling. The water is extracted from the air in order to protect the valves against icing at low ambient temperatures. If the valves were to freeze due to excessively high air humidity in the air supply system, this would mean that level control by the air suspension would no longer be possible. To avoid this, the air drier is permanently cleaned or dried.

The granulate in the air drier absorbs moisture at high pressure and gives this off again at low pressure. The moisture is extracted from the air when air flows through the granulate when filling the system. When the vehicle height is lowered, the excess air with low pressure is routed through the air drier. The stored moisture is then give off to the air again as it flows past. This permanent regeneration of the air drier ensures fault-free operation of the system without the need for maintenance work.

G12 Chassis and Suspension

3. Air Suspension

Pneumatic connections in compressed air systems are usually provided with standardised numbers. This serves the purpose of differentiation and is intended to exclude the possibility of the connections being mixed up. The following table provides an overview of the standardized number codes.

Number code	Meaning
0	Intake air connection
1	Energy supply
2	Energy outlet
3	Atmosphere

G12 Chassis and Suspension

3. Air Suspension

The following graphic shows a schematic illustration of the air supply system.

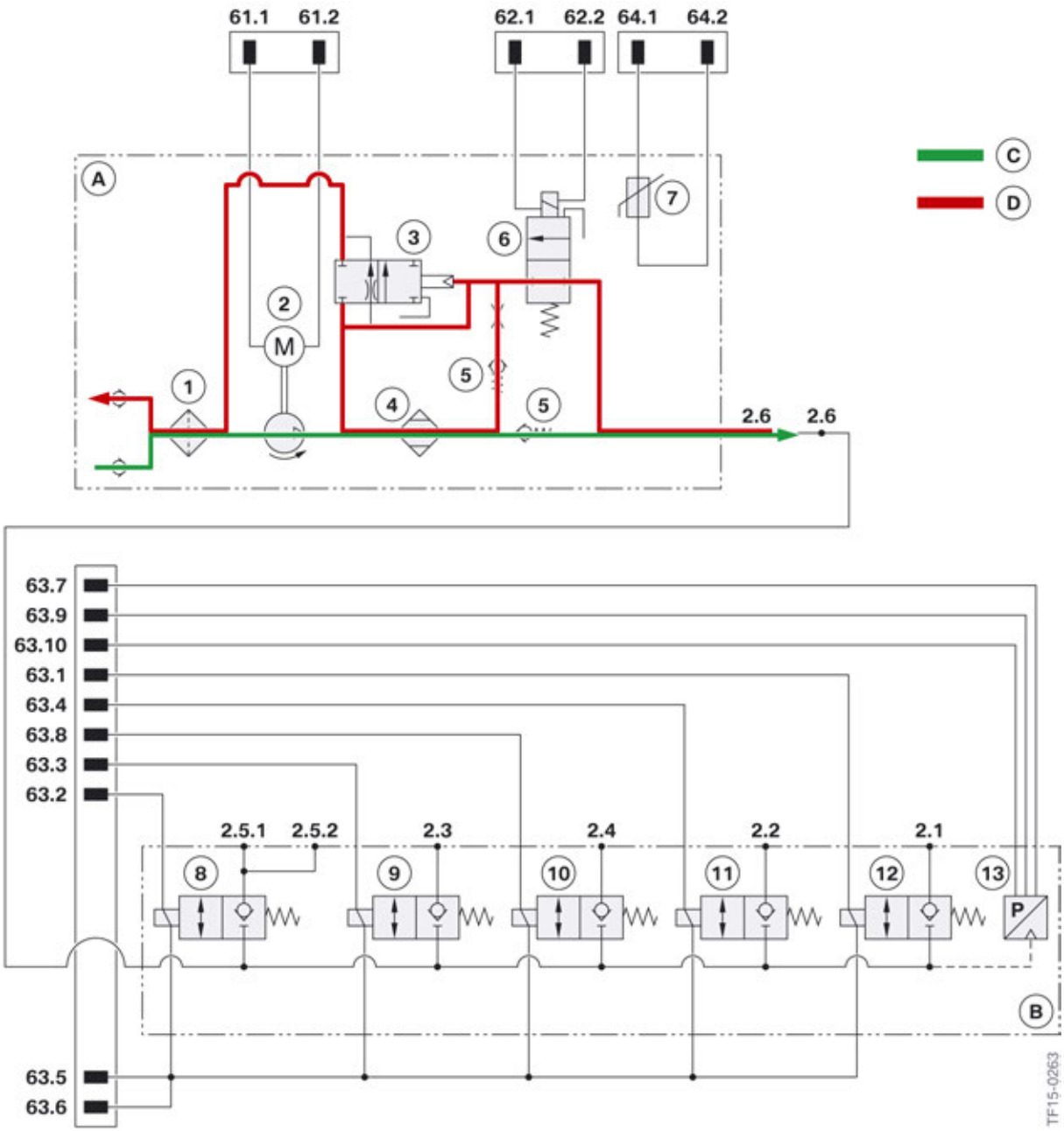

Schematic illustration of the air supply system in the G12

Index	Explanation
A	Air compressor
B	Solenoid valve block
C	Filling
D	Draining

G12 Chassis and Suspension

3. Air Suspension

Index	Explanation
1	Air filter
2	Electric motor
2.1	Energy outlet, output 1 (air suspension strut, front left)
2.2	Energy outlet, output 2 (air suspension strut, front right)
2.3	Energy outlet, output 3 (air suspension strut, rear left)
2.4	Energy outlet, output 4 (air suspension strut, rear right)
2.5.1	Energy outlet, pressure accumulator 1
2.5.2	Energy outlet, pressure accumulator 2
3	Pneumatic discharge valve with pressure relief function
4	Air drier
5	Non-return valve
6	Electrical drain solenoid valve
7	Temperature sensor
8	Electrical solenoid valve of pressure accumulators
9	Electrical solenoid valve for rear left air suspension strut
10	Electrical solenoid valve for rear right air suspension strut
11	Electrical solenoid valve for front right air suspension strut
12	Electrical solenoid valve for front left air suspension strut
13	Pressure sensor

3.1.1. Technical data

	Compressor	Drain solenoid valve	Temperature sensor	Solenoid valve block
Supply voltage	12 V	12 V	5 V	12 V
Pickup current per valve	—	0.82 A6	—	0.8 - 1.0 A
Holding current per valve	—	0.55 A6	—	0.55 A6
Maximum starting current	110 A6	—	—	—

	Compressor	Drain solenoid valve	Temperature sensor	Solenoid valve block
Maximum continuous current	35 A6	2.5 A6	—	3.1 A6
Dynamic pressure control	22.5 bar	—	—	—
Resistance	—	9 Ω	5 kΩ at 25 °C / 77 °F	6.8 kΩ

3.1.2. Solenoid valve block

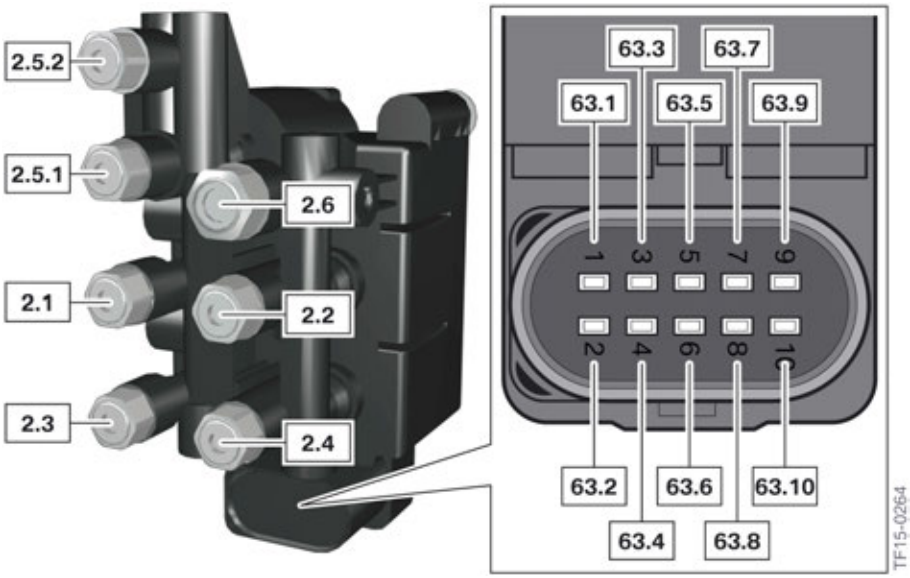

Solenoid valve block of the air supply in the G12

Index	Explanation
2.1	Energy outlet, output 1 (air suspension strut, front left)
2.2	Energy outlet, output 2 (air suspension strut, front right)
2.3	Energy outlet, output 3 (air suspension strut, rear left)
2.4	Energy outlet, output 4 (air suspension strut, rear right)
2.5.1	Energy outlet, pressure accumulator 2 l
2.5.2	Energy outlet, pressure accumulator 4 l
63.1	Activation of solenoid valve for front left air suspension strut
63.2	Activation of solenoid valve of pressure accumulators
63.3	Activation of solenoid valve for rear left air suspension strut
63.4	Activation of solenoid valve for front right air suspension strut
63.5	Ground

Index	Explanation
63.6	Ground
63.7	Sensor ground (pressure sensor)
63.8	Activation of solenoid valve for rear right air suspension strut
63.9	Sensor voltage supply (pressure sensor)
63.10	Sensor signal output (pressure sensor)

The different electrical solenoid valves are located in the solenoid valve block. These are used to forward the compressed air to the different components of the air suspension. The required calculations for control of the electrical solenoid valves take place in the Vertical Dynamics Platform (VDP) control unit.

The following control speeds can be achieved for axle-based changes in the ride height by the system:

- Control via the pressure accumulators ~ 10 mm/s
- Control via the electrical compressor ~ 2 mm/s

An advantage of the installation position of the pressure sensor is that the filling pressures of the pressure accumulators and air suspension struts can be read in with only one sensor depending on activation.

When the electrical solenoid valve of the pressure accumulators is activated, a pressure sensor supplies information about the current filling pressure of the system to the Vertical Dynamics Platform (VDP) control unit. If the stored pressure is not sufficient for a pending change in ride height, the Vertical Dynamics Platform (VDP) control unit switches on the compressor for pressure build-up. However, the compressor is switched on only subject to certain preconditions when the vehicle is at standstill so that comfort is not impaired (see Air supply system).

In the event of activation of the solenoid valves for operation of the air suspension struts, the pressure sensor supplies the filling pressures of the corresponding air suspension struts.

3.2. Air suspension strut

The height of the vehicle body is automatically controlled via the pressure in the air suspension strut in all load states. This prevents the vehicle body from sinking when the vehicle is loaded. The air supply for the air suspension struts is provided by an electrically driven compressor and 2 air accumulators. The air suspension thus functions independently of the operating condition of the combustion engine and can also compensate uneven loading (e.g. sloping load) by individual wheel control on the rear axle.

G12 Chassis and Suspension

3. Air Suspension

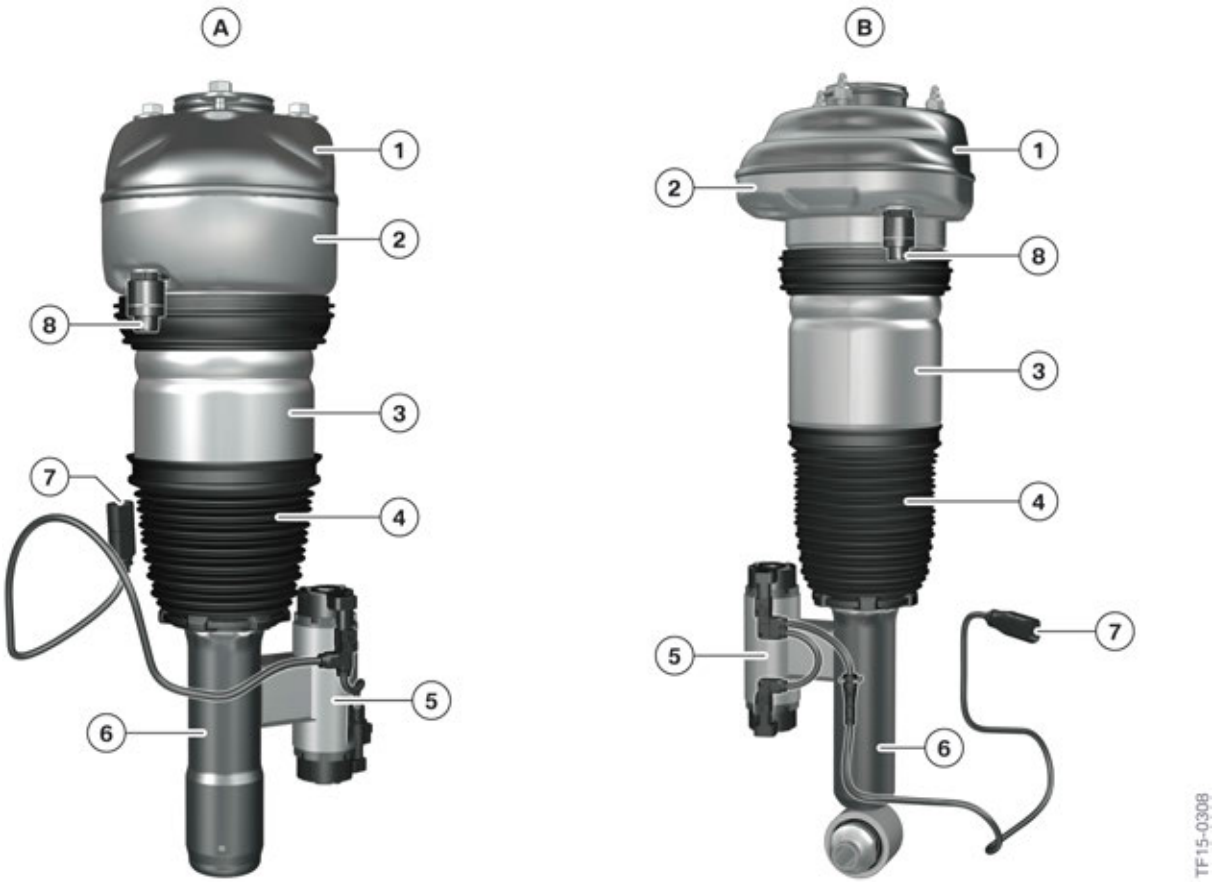

Air suspension struts on front and rear axles in the G12

Index	Explanation
A	Air suspension strut on the front axle (illustration from all-wheel drive)
B	Air suspension strut on rear axle
1	Pot, upper part
2	Pot, lower part
3	Gaiter
4	Dust boot
5	Control valve of the Electronic Damper Control (EDC)
6	Damper tube
7	Electrical connection for damper adjustment
8	Pneumatic connection with integrated residual pressure holding valve

On the air suspension strut, the coil spring is replaced by a U-type bellows. The air is pressed into the air suspension strut via a compressed air connection. The U-type bellows of the air suspension strut unrolls as a result of the pressure increase and raises the vehicle body. When the air suspension strut is vented, the pressure falls and the U-type bellows rolls up again so that the vehicle body is lowered.

There is a residual pressure holding valve inside the pneumatic connections to prevent complete pressure reduction in the air suspension strut. A residual pressure of 1.8 – 2.7 bar is held when the compressed air lines are removed.

The pneumatic connections with integrated residual holding valve on the air suspension strut cannot be replaced separately. The air suspension strut will be damaged if it is attempted to removed the pneumatic connections with integrated residual pressure holding valve.

	Air suspension strut, front axle	Air suspension strut, rear axle
Air volume in normal position	2.87 L	2.85 L
Compression travel	65 mm	86 mm
Rebound travel	76 mm	106.4 mm
Filling pressure on delivery	1.8 - 2.7 bar	1.8 - 2.7 bar

3.3. Ride height sensor

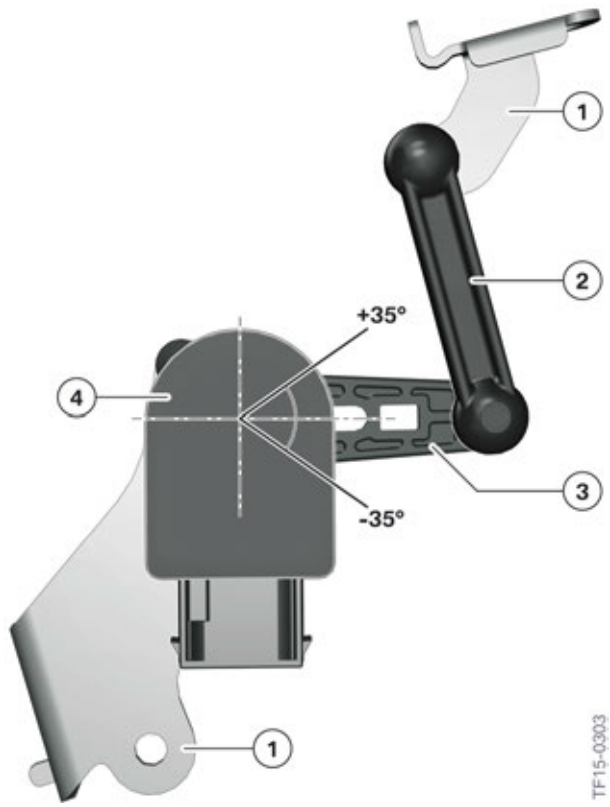

Ride height sensor in the G12

Index	Explanation
1	Holder
2	Articulated rod with ball socket
3	Deflection lever
4	Ride height sensor

The Vertical Dynamics Platform (VDP) control unit reads in the current ride height values of the vehicle body by means of the 4 ride height sensors. The maximum measuring range of the ride height sensor is 70°. The output is an analogue voltage signal between 0.5 V and 4.5 V.

The ride height sensor has the following electrical connections:

- Voltage supply (5 V)
- Ground connection
- Signal output (0.5 – 4.5 V)

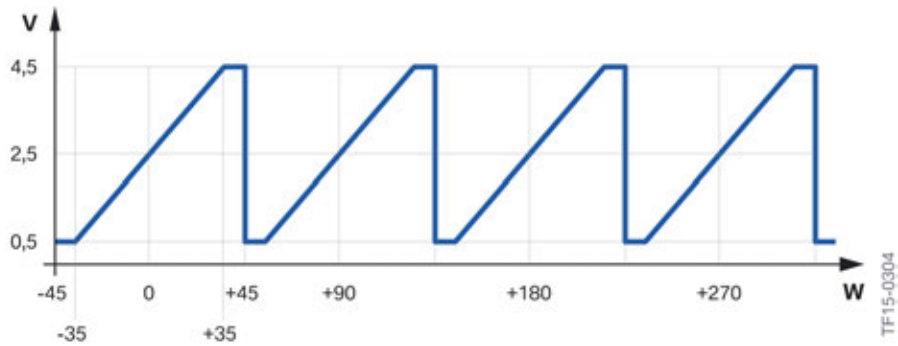

Ride height signal of the ride height sensors in the G12

Index	Explanation
V	Voltage in V
W	Angle

After renewal of one or more ride height sensors, the service function for ride height adjustment must be performed using the BMW diagnosis system ISTA.

The ride height values are stored in the Body Domain Controller. They are also used for level adjustment of the headlights.

G12 Chassis and Suspension

3. Air Suspension

3.4. Operating strategy

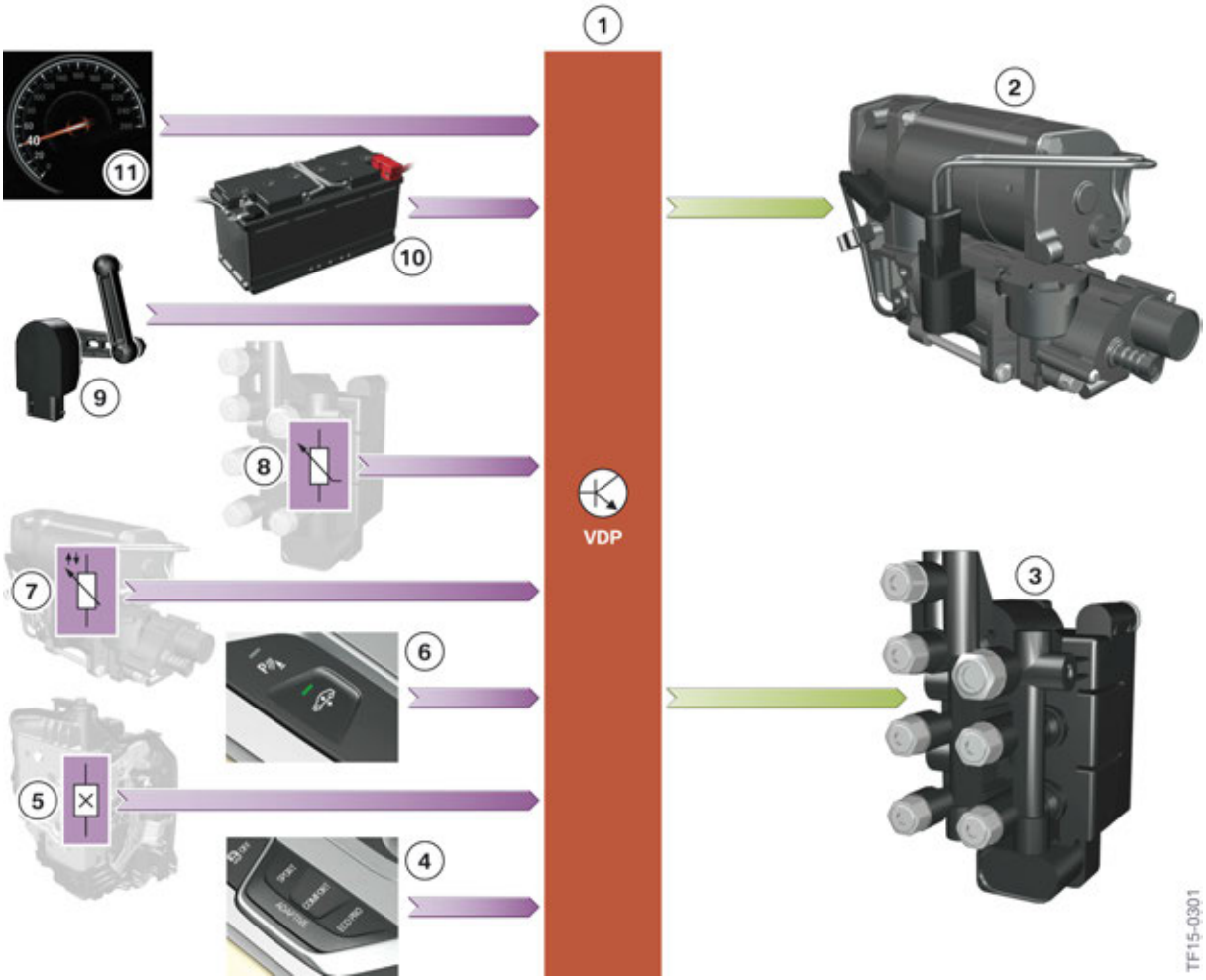

Input and output diagram of the air suspension in the G12

Index	Explanation
1	Vertical Dynamics Platform (VDP)
2	Compressor
3	Solenoid valve block
4	Driving experience switch
5	Door contact switch
6	Ride height selection switch
7	Temperature sensor (inside the compressor)

Index	Explanation
8	Pressure sensor (inside the solenoid valve block)
9	Ride height sensor
10	Vehicle electrical system voltage
11	Vehicle speed

Configuration options of the air suspension in the G12

Index	Explanation
A	Normal level or Sport level activated
B	High level activated
1	SPORT button on the driving experience switch
2	Ride height selection switch

The ride height can be adjusted manually by means of the ride height selection switch and the driving experience switch. Three different ride heights are available.

G12 Chassis and Suspension

3. Air Suspension

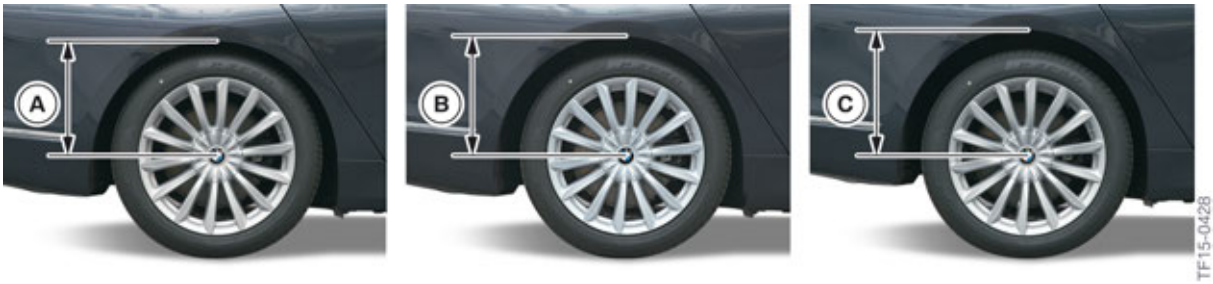

Ride heights of the G12

Index	Explanation
A	Sport level (- 10 mm)
B	Normal level (+/- 0 mm)
C	High level (+ 20 mm)

Situation	High level	Normal level	Sport level
Ride height	+ 20 mm	+/– 0 mm	- 10 mm
Ride height activation	Ride height selection switch	—	1) Driving experience switch 2) Driving speed > ~ 140 km/h / > ~ 87 mph
Speed	0 – 40 km/h /0 – 25 mph	0 ~140 km/h / 0 ~87 mph	1) 0 km/h – final speed 2) ~ 140 km/h / ~ 87 mph – final speed

The following prerequisites must be met in order to perform manual adjustment in the ride height by means of the ride height selection switch:

- Driving readiness Residing/Awake or driving between 0 – 40 km/h / 0 – 25 mph
- Sufficient vehicle voltage
- Doors closed
- Pressure accumulator with sufficient filling pressure (only relevant for driving readiness Residing/Awake)

G12 Chassis and Suspension

3. Air Suspension

The following graphic shows the operating strategy of the air suspension in the G12.

Operating strategy of the air suspension in the G12

Index	Explanation
A	High level (+ 20 mm)
B	Normal level (+/- 0 mm)
C	Sport level (- 10 mm)
H	Ride height of the vehicle body
v	Vehicle speed
1	Ride height selection switch set to High level
2	Driving experience switch in Comfort position
3	Driving experience switch in Sport position

3.4.1. High level

Operating strategy of the air suspension in the G12 at High level

Index	Explanation
A	High level (+ 20 mm)
B	Normal level (+/- 0 mm)
C	Sport level (- 10 mm)
H	Ride height of the vehicle body
v	Vehicle speed
1	Ride height selection switch set to High level
2	Driving experience switch in Comfort position
3	Driving experience switch in Sport position

In the speed range between 0 – 40 km/h /0 – 25 mph, the High level (+ 20 mm) can be activated manually via the ride height selection switch. This ride height setting is intended to allow the driver to drive over shoulders or ramps with a large gradient angle without damaging the vehicle due to the increased ground clearance. The following ride heights are set automatically if this speed range is exceeded.

1 If the driving experience switch is in Comfort position, the ride height is lowered to Normal level (+/- 0 mm).

2 If the driving experience switch is in Sport position, the ride height is lowered to Sport level (- 10 mm).

When a driving speed of ~ 140 km/h / ~ 87 mph is exceeded, the vehicle body is automatically lowered from Normal level to Sport level (- 10 mm) independently of the respective switch settings. Lowering to Sport level offers the following advantages:

- Low vehicle center of gravity and thus increased driving dynamics.
- Improved aerodynamics and thus lower fuel consumption.

3.4.2. Normal level

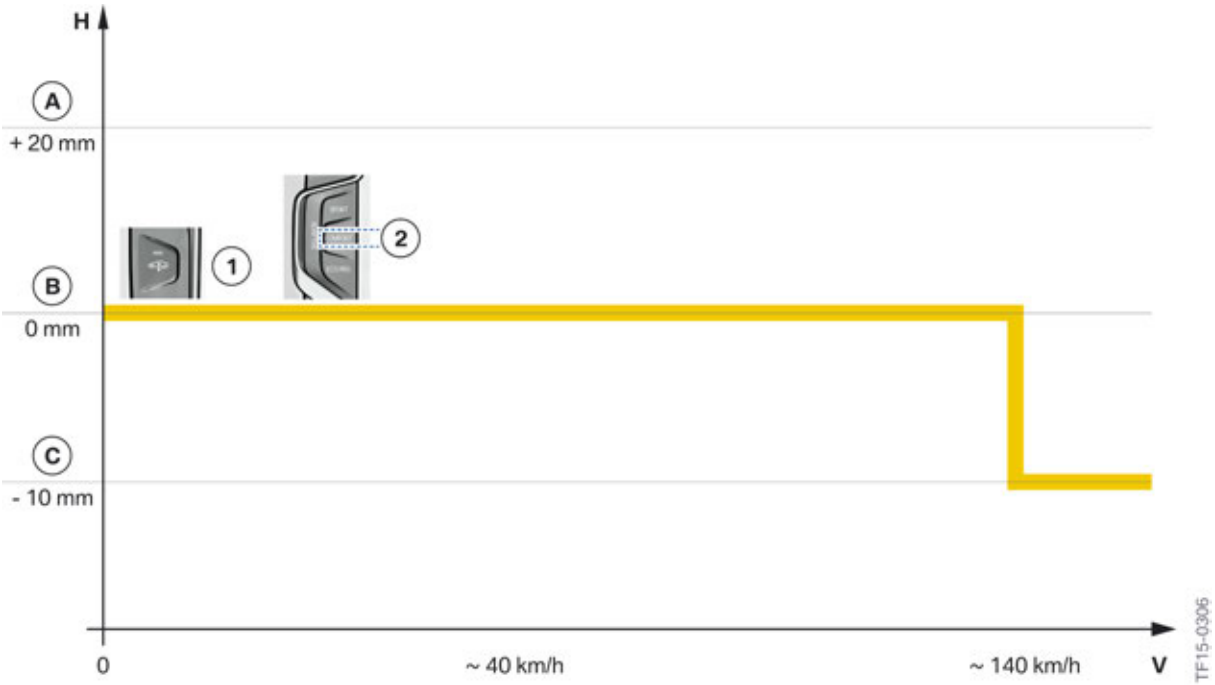

Operating strategy of the air suspension in the G12 at Normal level

Index	Explanation
A	High level (+ 20 mm)
B	Normal level (+/- 0 mm)
C	Sport level (- 10 mm)
H	Ride height of the vehicle body
v	Vehicle speed
1	Ride height selection switch at Normal level
2	Driving experience switch in Comfort setting

Normal level (+/- 0 mm) can be set by means of the following switch positions.

- Ride height selection switch in Normal position.
- Driving experience switch **not** in Sport position.

When a driving speed of ~ 140 km/h / ~ 87 mph is exceeded, the vehicle body is automatically lowered from Normal level to Sport level (-10 mm) independently of the respective switch settings. Lowering to Sport level offers the following advantages:

- Low vehicle center of gravity and thus increased driving dynamics.
- Improved aerodynamics and thus lower fuel consumption.

3.4.3. Sport level

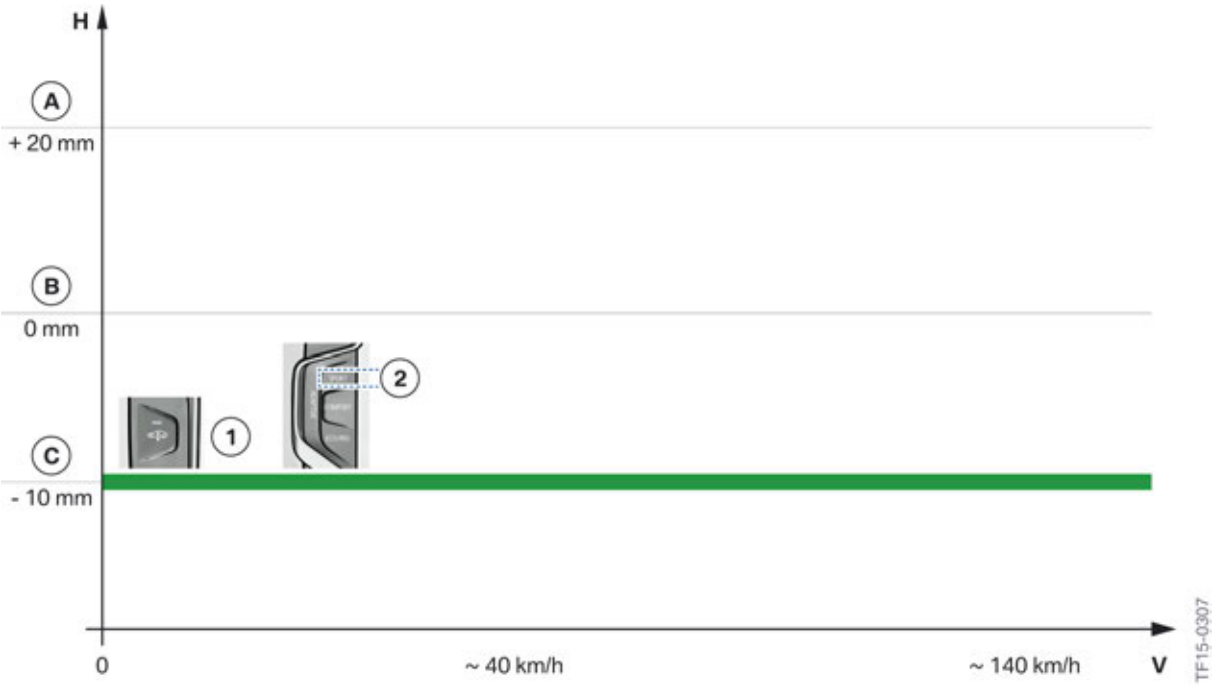

Operating strategy of the air suspension in the G12 at Sport level

Index	Explanation
A	High level (+ 20 mm)
B	Normal level (+/- 0 mm)
C	Sport level (- 10 mm)
H	Ride height of the vehicle body
v	Vehicle speed
1	Ride height selection switch at Normal level
2	Driving experience switch in Sport setting

Sport level (- 10 mm) can be set by means of the following switch positions.

- Ride height selection switch in Normal position.
- Driving experience switch in Sport position.

Sport level (- 10 mm) offers the highest driving dynamics of all ride heights due to the low vehicle center of gravity. The fuel consumption also falls due to the improved aerodynamics.

3.5. Notes for Service

Complete (100%) tightness of the air suspension cannot be guaranteed due to the numerous flexible compressed air lines with the corresponding compressed air connections. A defined low loss of compressed air is therefore permissible. If the vehicle is parked at Normal level, the ride height may be lowered by up to a maximum of – 2 mm after 24 hours. This means that the ride height may be lowered by up to - 60 mm for a vehicle that has been parked for 30 days without there being a fault caused by a leak.

Side view of the G12 with air suspension lowered to maximum extent

Since components do not all leak to the same extent for tolerance reasons, it is also possible that the vehicle will be sloping at an angle after a prolonged standstill time.

Low and sloping vehicle positions are automatically compensated by the air suspension after detection of the vehicle condition Residing/Awake. For this purpose, the missing compressed air is forwarded to the corresponding spring struts by the pressure accumulator. If the filling pressure of the pressure accumulators is too low, the lack of air is compensated by switching on the electrical compressor.

The following scenarios for activation of the electrical compressor are possible:

1 If the ride height is less than – 40 mm, the compressor will be switched on only when the engine is running.

2 If the ride height is more than – 40 mm and the vehicle electrical system has sufficient voltage, the compressor will already be switched on when the vehicle condition Residing/Awake is detected.

3.5.1. Lifting the vehicle

The air suspension has a jack detection function. This prevents control action of the air suspension when the vehicle is lifted.

3.5.2. Transport mode

The air suspension is in transport mode when new vehicles are delivered. A change in the ride height is not possible. Transport mode must be deleted using the BMW diagnosis system ISTA during the pre-delivery check. The different ride heights of the air suspension can be selected only after successful start-up of the air suspension (transport mode deleted).

3.5.3. Bleeding the air suspension

When working on components of the air suspension system, it is necessary to depressurize the system before undoing the various compressed air lines. This can be done using the BMW diagnosis system ISTA by means of a bleeding routine. Here, the various solenoid valves of the air suspension struts and the electrical drain solenoid valve are activated simultaneously. In order to protect the valves against overheating, the bleeding routine cannot be performed an arbitrary number of times in succession. However, the function is available again after a defined waiting period.

⚠

In order to avoid damage to the air suspension struts, the vehicle should be raised slightly using a vehicle hoist during the bleeding routine.

However, it is not recommended to completely lift the vehicle during the bleeding routine as this hampers complete emptying of the compressed air from the air suspension struts.

3.5.4. Filling the air suspension

The system is filled automatically via the vehicle's electrical compressor as soon as the marginal conditions for this are met. In order to perform a leakage test of the air suspension in Service, the electrical compressor can be switched on manually to fill the system using the BMW diagnosis system ISTA. If the air suspension is filled several times, the electrical compressor may be switched off to prevent the compressor from being damaged.

G12 Chassis and Suspension

3. Air Suspension

3.6. System wiring diagram

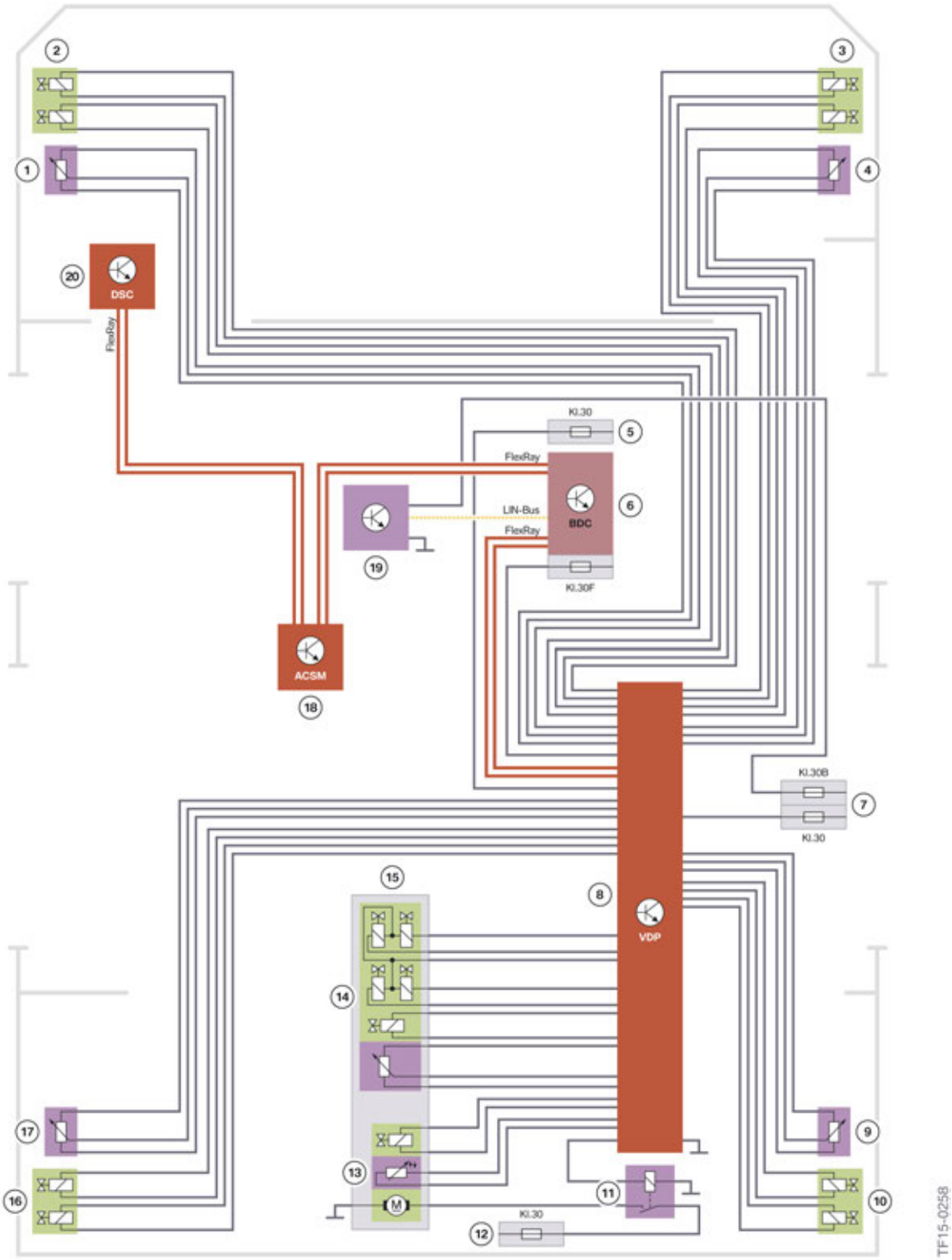

System wiring diagram of the two-axle ride level control in the G12

G12 Chassis and Suspension

3. Air Suspension

Index	Explanation
1	Ride height sensor, front left
2	EDC valve, front left (Electronic Damper Control)
3	EDC valve, front right (Electronic Damper Control)
4	DSC ride height sensor, front right
5	Power distribution box, front right
6	Body Domain Controller (BDC)
7	Rear right power distribution box
8	Vertical Dynamics Platform (VDP)
9	Ride height sensor, rear right
10	EDC valve, rear right (Electronic Damper Control)
11	Relay for air supply system
12	Positive battery terminal distributor
13	Compressor
14	Solenoid valve block
15	Air supply system
16	EDC valve, rear left (Electronic Damper Control)
17	Ride-height sensor, rear left
18	Crash Safety Module (ACSM)
19	Ride height selection switch
20	Dynamic Stability Control (DSC)

G12 Chassis and Suspension

4. Brakes

The following graphic provides an overview of the brake system of the G12.

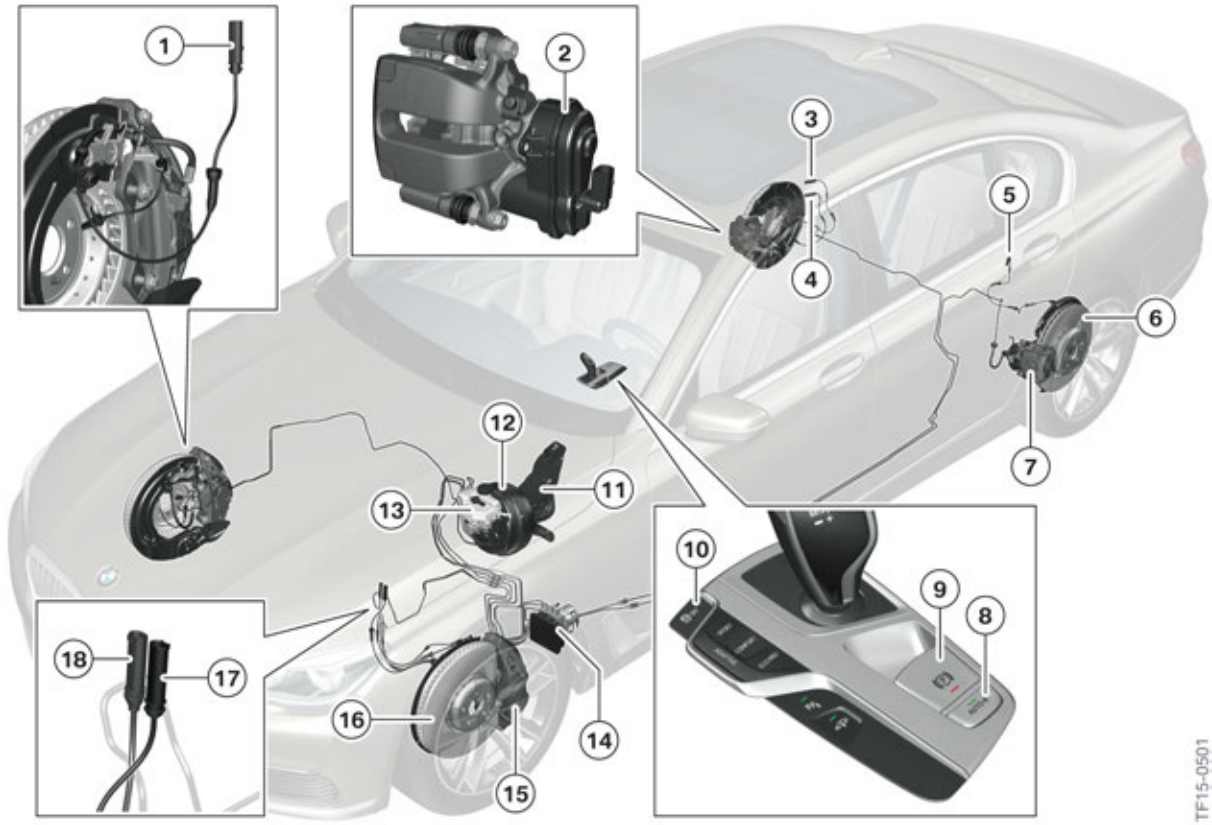

Overview of brake system in the G12

Index	Explanation
1	Plug-in contact, wheel-speed sensor, front right
2	EMF actuator (electromechanical parking brake)
3	Plug-in contact, wheel speed sensor, rear right
4	Plug-in contact, brake pad wear sensor, rear right
5	Plug-in contact, wheel speed sensor, rear left
6	Brake disc, rear axle
7	Brake caliper, rear axle
8	Auto-Hold button
9	Parking brake button
10	DSC button
11	Bearing support, pedal mechanism
12	Brake servo
13	Brake fluid expansion tank
14	Dynamic Stability Control (DSC)

G12 Chassis and Suspension

4. Brakes

Index	Explanation
15	Brake caliper, front axle
16	Brake disc, front axle
17	Plug-in contact, wheel-speed sensor, front left
18	Plug-in contact, brake pad wear sensor, front left

4.1. Service brakes

4.1.1. Brake design

In order to enhance the visual appearance of the brakes, Black painted calipers are optional in the “Autobahn Package” (ZAN).

Versions	Front axle	Rear axle
Standard four piston front calipers and single piston rear calipers.		
Autobahn Package includes painted black calipers with BMW logo print. Four piston front calipers and single piston rear calipers.		

4.1.2. Pedal mechanism mounting

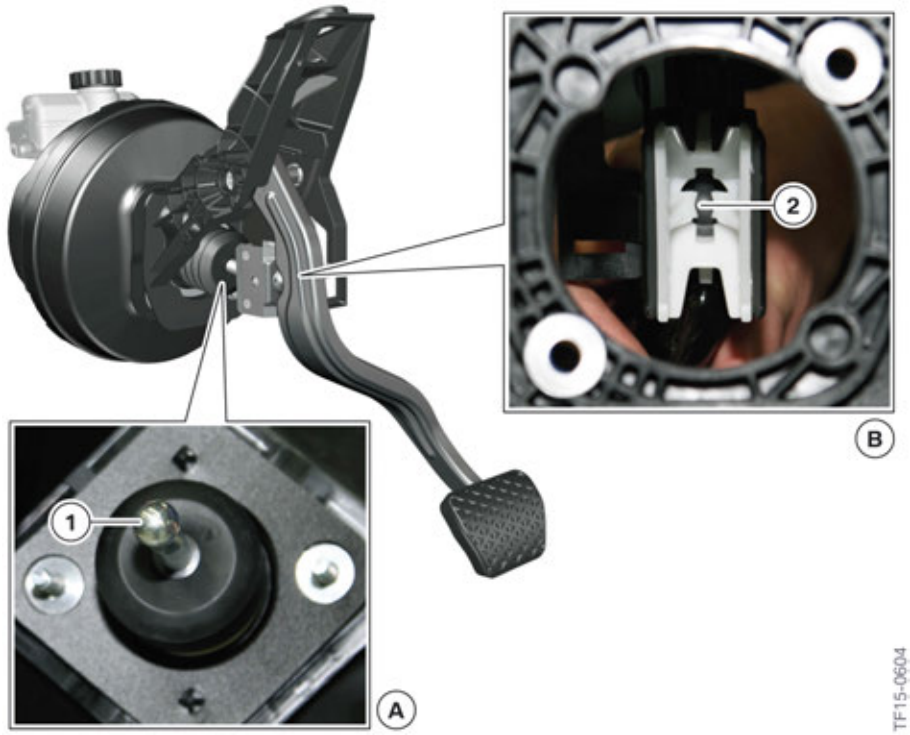

Mounting of the pedal mechanism on the brake servo linkage in the G12

Index	Explanation
A	Brake servo linkage
B	Pedal mechanism
1	Ball head
2	Plastic clip

A modified mounting is used in the G12 between the pedal mechanism and the brake servo linkage. Here, the ball head of the brake servo linkage is engaged in a plastic clip on the pedal mechanism.

A new special tool is needed to release this connection.

Part number 83 30 2 409 646

Special tool for removing the pedal mechanism

When removing the pedal mechanism, always observe the instructions in the current repair instructions.

4.2. Parking brake

The BMW E65/E66 (BMW 7 Series from 2001 – 2008) was the first production vehicle in the world with an electromechanical parking brake EMF. This was followed by many other BMW models with different electrical parking brake systems.

The following advantages result from the use of such a system:

- More storage space due to omission of a parking brake lever and parking brake Bowden cable.
- Contact pressure of brake pads correctly adjusted at all times.
- Various additional functions to assist the driver (e.g. automatic release when driving off).
- Higher braking power of auxiliary brake system.

The following 2 different electrical systems are currently used at BMW:

- Electromechanical parking brake = Cable pull system via duo-servo parking brake (Küster system).
- Electric parking brake = Combined brake caliper (TRW/Continental system).

G12 Chassis and Suspension

4. Brakes

The following graphic shows a comparison of the two systems.

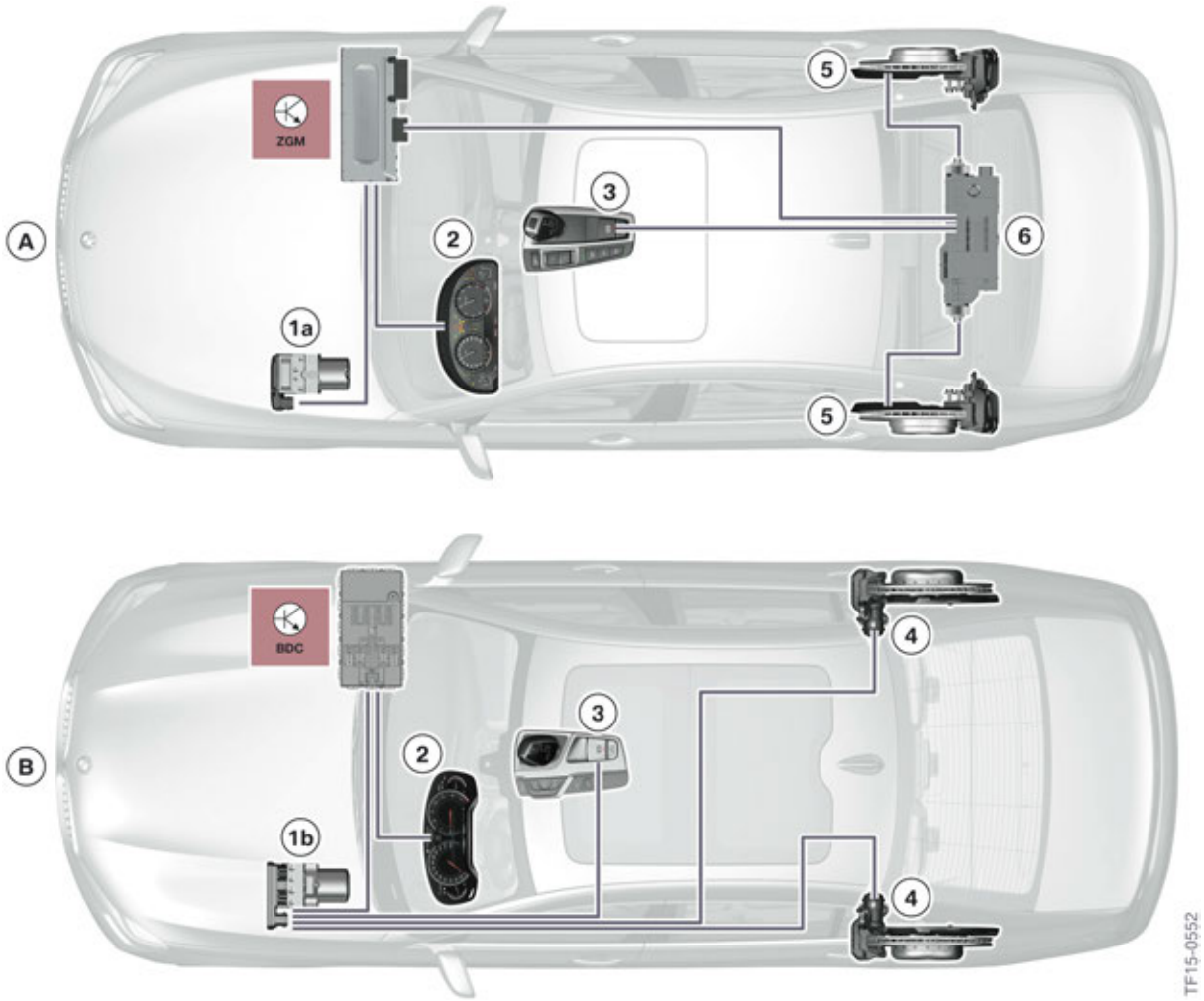

System comparison of the electromechanical parking brake in the F01/F02 with the electric parking brake of the G12

Index	Explanation
A	F01/F02 (BMW 7 Series from 2008 – 2015)
B	G12 (BMW 7 Series from 2015)
1a	DSC control unit (Dynamic Stability Control)
1b	DSC control unit with integrated parking brake function (Dynamic Stability Control)
2	Instrument panel (KOMBI)
3	Parking brake button
4	Electric parking brake via actuator at combined brake caliper

Index	Explanation
5	Electromechanical parking brake via duo-servo parking brake
6	Electromechanical parking brake actuator unit with integrated control unit (electromechanical parking brake)
BDC	Body Domain Controller
ZGM	Central gateway module

In contrast to the cable pull system in the F01/F02, the electric parking brake system with a combined brake caliper familiar from the smaller series is used in the G12.

Previously, the parking brake was realized by means of a duo-servo parking brake in the heavy upper class vehicles. The advantage of this system is the high self-locking force of the brake pads when the parking brake is applied.

Due to the increase in the preload forces of the combined brake caliper with electric parking brake, it was possible to dispense with the previously used cable pull system in the G12. Omission of the associated components is beneficial for weight reduction and also for the repair friendliness of the G12.

The electric parking brake of the G12 is differentiated above all by the fact that there is no separate control unit. The electric parking brake is activated via the control unit of the Dynamic Stability Control (DSC). There is a parking brake button on the center console for activating or deactivating the electric parking brake. The driver is informed about the current system status via the instrument cluster KOMBI.

The brake pad is applied with a precisely calculated preload force via two actuators screwed onto the brake calipers. A temperature model is stored in the DSC control unit which makes it possible to draw conclusions about the brake disc temperatures. As the contact pressure decreases when the brake discs cool down, the system must adjust the brake pads as appropriate, particularly if the brake discs are hot. The time and frequency of the adjustment varies depending on the initial temperature calculated.

When the electric parking brake is opened, the actuators are moved back only until the brake pads have reached their correctly set clearance. Due to this readjustment function, the actuators must be moved back before exchanging the brake pads in Service. For the detailed procedure, refer to the current repair instructions.

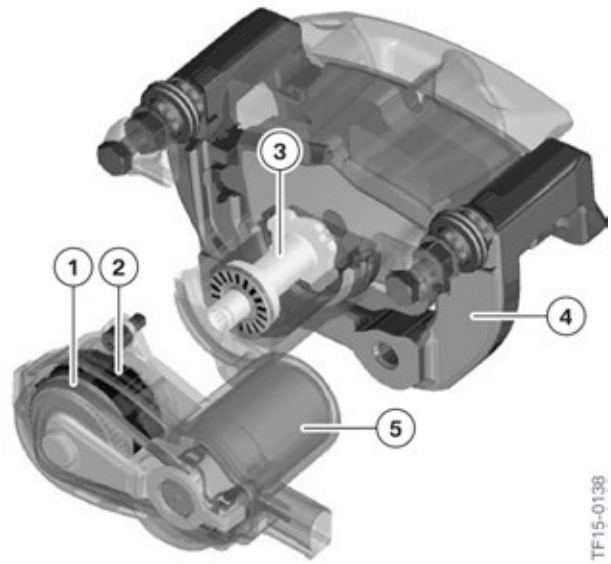

Actuator for electric parking brake in the G12

Index	Explanation
1	Belt drive
2	Planetary gears
3	Spindle nut
4	Brake caliper
5	Electric motor (DC)

There is an electric motor with belt drive and planetary gear on the housing of the combined brake caliper with electric parking brake. When the electric motor is activated, the force is transmitted via the belt drive and planetary gear to the spindle nut. The spindle nut generates the required stroke to apply the brake pad. The control unit of the Dynamic Stability Control can determine the preload force on the basis of the rise in current of the electric motor.

When carrying out servicing work, an extended spindle nut can be travelled back to its initial position as follows:

- Special tool for mechanically turning back
- Service function “Workshop mode” in the BMW diagnosis system ISTA

4.2.1. Functions

Dynamic emergency braking

If the parking brake button is operated during the journey above a defined driving speed, the DSC unit initiates a dynamic emergency braking operation. A pressure build-up occurs in all 4 wheel brakes due to activation of the 6-piston pump and the changeover valves in the DSC unit. The slip limits of all wheels are monitored with the assistance of the four wheel speed sensors to ensure a stable braking

operation until the vehicle comes to a standstill. The two actuators of the electric parking brake are activated as soon as the vehicle comes to a standstill. The vehicle is then secured to prevent it from rolling away only by means of the parking brake.

Automatic release of the parking brake

This function allows the driver to drive off when the parking brake is activated without operating the parking brake button to release the brake.

Prerequisites for releasing the electric parking brake:

- Driver's door is closed
- Vehicle condition DRIVING
- Electric parking brake actuated
- Drive position engaged
- Accelerator pedal operated

4.2.2. Brake test stand

The Dynamic Stability Control (DSC) has a roller mode so that the braking power of the electric parking brake can be checked on a brake test stand. When roller mode is activated, the vehicle is braked via the actuators of the electric parking brake when the parking brake button is pressed. A DSC pressure build-up in the 4 wheel brakes does not take place. This makes it possible to determine the brake forces of the electric parking brake.

In the G12, roller mode is automatically detected on the basis of a plausibility check (wheel speed comparison). The detection takes a maximum of 5 seconds (can be recognized by slow flashing of the red parking brake indicator light).

After activation of test stand mode the system is in test stand mode. This condition is acknowledged by the indicator light of the parking brake starting to flash at a frequency of 1 Hz. The parking brake can be applied in 5 stages using the parking brake button. In this case, the braking varies between the minimum braking power in the first stage and the maximum braking power once the parking brake button has been pressed five times. If the button is operated continuously, the system increases the braking power automatically incrementally up to the maximum braking power. The flashing frequency of the parking brake indicator light changes from 1 Hz to 3 Hz when the parking brake button is pressed in test stand mode.

The following points must be observed during the test:

- Do not press the accelerator
- Drive position N (neutral)
- Do not press the footbrake

4.3. Service information

4.3.1. Service brakes

The status of the brake pads cannot be read out permanently via the Central Information Display (CID).

The following graphic shows the vehicle status without and with information about the status of the brake pads on the Central Information Display (CID).

CID message on vehicle status in the G12

Index	Explanation
A	Brake pad wear sensor within limits
B	Brake pad wear sensor outside limits
1	Vehicle status
2	OK Engine oil
3	OK Brake fluid
4	OK § vehicle inspection
5	OK Vehicle check
6	▲ Brake pads rear (pad wear shortly before the wear limit)

The G12 is equipped with a one-stage brake pad wear sensor. No vehicle status about the current status of the brake pads is output as long as this sensor has not been ground by the brake disc.

Before the wear limit of the brake pad is reached, the sensor wire of the one-stage brake pad wear sensor is cut through by the rotating brake disc while driving. As from this point, the vehicle status of the brake pads can be checked on the Central Information Display (CID). The remaining distance until the wear limit of the brake pad is reached is 4000 - 5000 km / 2500 - 3100 miles, depending on driving style.

In addition, the driver is informed about the condition of the brake pads by means of the following warnings.

Remaining distance	Yellow Check Control message	Red Check Control message
< 2000 km / <1200 miles	X	
0 km / 0 miles		X

The current repair instructions must always be observed in order to avoid interference noises after brake pad replacement.

4.3.2. Parking brake

Replacing brake pads

In order to replace the brake pads of the rear parking brake calipers, it is first necessary to turn back the drive spindle in the brake caliper. This can be done either manually using a special tool or using the BMW diagnosis system ISTA. The parking brake button is blocked to prevent use after activation of workshop mode via the BMW diagnosis system ISTA. This prevents injury during the brake service. The parking brake button is enabled again at the start of driving or after exiting workshop mode.

After enabling via the speed threshold of 3 km/h / 1.8 mph, the parking brake must be re-initialized by button operation (apply/release brake).

Emergency release

It is possible to mechanically turn back the drive spindle to release the parking brake after removing the actuator housing from the brake caliper. To prevent accidents, the vehicle must first be secured to prevent it from rolling away.

Emergency release of the electric parking brake is permitted only by correspondingly trained personnel.

G12 Chassis and Suspension

5. Wheels / Tires

The G12 will be equipped in the standard equipment configuration with run-flat tires. A spare wheel is available as optional equipment.

Components	Standard equipment	Optional equipment
Run-flat tires	X	
Spare wheel (OE 300)		X

Tires of the G12

Index	Explanation
A	Tires without emergency running properties (Not for US)
B	Run-flat tires

In the event of tire pressure loss in a run-flat tire, the customer can still drive at a restricted speed (max. 80 km/h / 50 mph) for a remaining distance that is dependent on the vehicle load. On vehicles with the optional chassis and suspension package “Active Comfort Drive”, the vehicle weight is automatically distributed via the active electric stabilizers when driving with an unpressurized run-flat tire so that the unpressurized wheel (< 0.5 bar) is relieved to the maximum possible extent and the intact wheels loaded correspondingly. This ensures that the maximum possible remaining distance can be driven. The maximum permitted remaining distance with medium load is 80 kilometers / 50 miles.

Further information on the function of the active electric stabilizer is provided in the section “Autobahn Package”.

A damaged run-flat tire can also be replaced by a tire without emergency running properties in the event of tire failure. However, the tire without emergency running properties must be replaced at the earliest opportunity by a run-flat tire.

G12 Chassis and Suspension

5. Wheels / Tires

5.1. Puncture detection systems

Depending on country, the G12 is equipped with the following system for puncture detection:

- Tire pressure control (TPMS)

5.2. Tire Pressure Monitor TPMS

System overview of tire pressure control TPMS in the G12

Index	Explanation
1	Wheel electronics, front right
2	Central Information Display (CID) (display of tire pressures possible)
3	Wheel electronics, rear right
4	Remote control receiver (FBD)
5	Wheel electronics, rear left
6	Instrument panel (KOMBI)
7	Dynamic Stability Control (DSC)
8	Wheel electronics, front left

The G12 is equipped with the TPMS already familiar from the F15. The TPMS is a system which performs direct measurement and which determines the real tire pressures by means of wheel electronics in each wheel. Unlike with the TPMS low, a separate TPMS control unit is not required for the TPMS. The functions of the TPMS are integrated into the Dynamic Stability Control (DSC) control unit. The remote control receiver (FBD) acts as a receiver for the sent reports of all wheel electronics. It then forwards this information via bus to the DSC control unit.

The previous TPMS systems were supplied by Continental. The system supplier of the TPMS in the G12 is the company Schrader. In order to ensure fault-free operation of the system, it is essential that only Schrader wheel electronics are used. It is not possible to assume any liability for malfunctions with third-party wheel electronics.

On the G12, the rest times required by the system before the new wheel electronics can be taught, have changed. Previously, a vehicle with TPMS had to be stationary for an uninterrupted period of at least 8 minutes independently of the terminal status before the DSC control unit accepted the IDs of the new wheel electronics.

On the G12, the vehicle condition is decisive for the times required by the system before the IDs of new wheel electronics are accepted and taught. The following table provides an overview of the different conditions.

Vehicle condition	5 minutes	17 minutes
Residing/Awake	X	
Driving		X

So that new wheel electronics can be taught by the Dynamic Stability Control (DSC), a standing time of at least 5 minutes (Residing/Awake) or 17 minutes (driving) must be observed after a wheel exchange.

If the standing time of at least 5 minutes (Residing/Awake) or 17 minutes (driving) was not reached before starting a journey with new wheel electronics, a Check Control message will be displayed to the driver after a certain time. In this case, the vehicle must only remain stationary for an uninterrupted period of longer than 5 minutes in Residing/Awake mode or 17 minutes in Driving mode. The new wheel electronics will then be automatically taught by the control unit of the Dynamic Stability Control (DSC).

The vehicle can also be in the vehicle condition Driving when the engine has been switched off by the automatic engine start-stop function MSA.

The system must be re-initialized in the event of changes in the tire pressures as well as after wheel exchange. Initialization of the new tire pressures can be performed using the controller on the Central Information Display (CID).

5.2.1. Wheel electronics

Wheel electronics from Schrader in the G12

The wheel electronics are in the following modes, depending on the system status:

- Sleep mode
- Teach-in mode
- Readiness mode

There are also changes in the transmission modes of the Schrader wheel electronics in comparison with the transmission modes of the wheel electronics from Continental. In order to guarantee the longest possible battery capacity, the wheel electronics require longer standing times before they switch to teach-in mode.

After 15 minutes in rest mode (wheel standstill), the wheel electronics start to transmit in teach-in mode as soon as they are accelerated to a speed faster than around 20 km/h. In teach-in mode, the reports are sent to the DSC control unit every 15 seconds for approximately 9 minutes (40 reports). Transmission in teach-in mode allows the DSC control unit to calculate the installation position of the respective wheel electronics. The wheel electronics will start to transmit in readiness mode if a wheel

set was changed from one vehicle to another without the wheel set having been in rest mode (wheel standstill) for an uninterrupted period of more than 15 minutes. Teaching of the wheel electronics is not possible in readiness mode.

Balancing of the wheel set shortly before fitting on the vehicle is not a problem. Since only a small number of reports are transmitted in teach-in mode during balancing, the remaining reports are sufficient to reliably teach the wheel electronics.

The battery status of the wheel electronics can be read out via the BMW diagnosis system ISTA. The remaining battery life is specified in percent.

Detailed information on the operating principle of the TPMS is provided in the Training Reference Manual “I01 Complete Vehicle”.

G12 Chassis and Suspension

6. Driving Stability Control

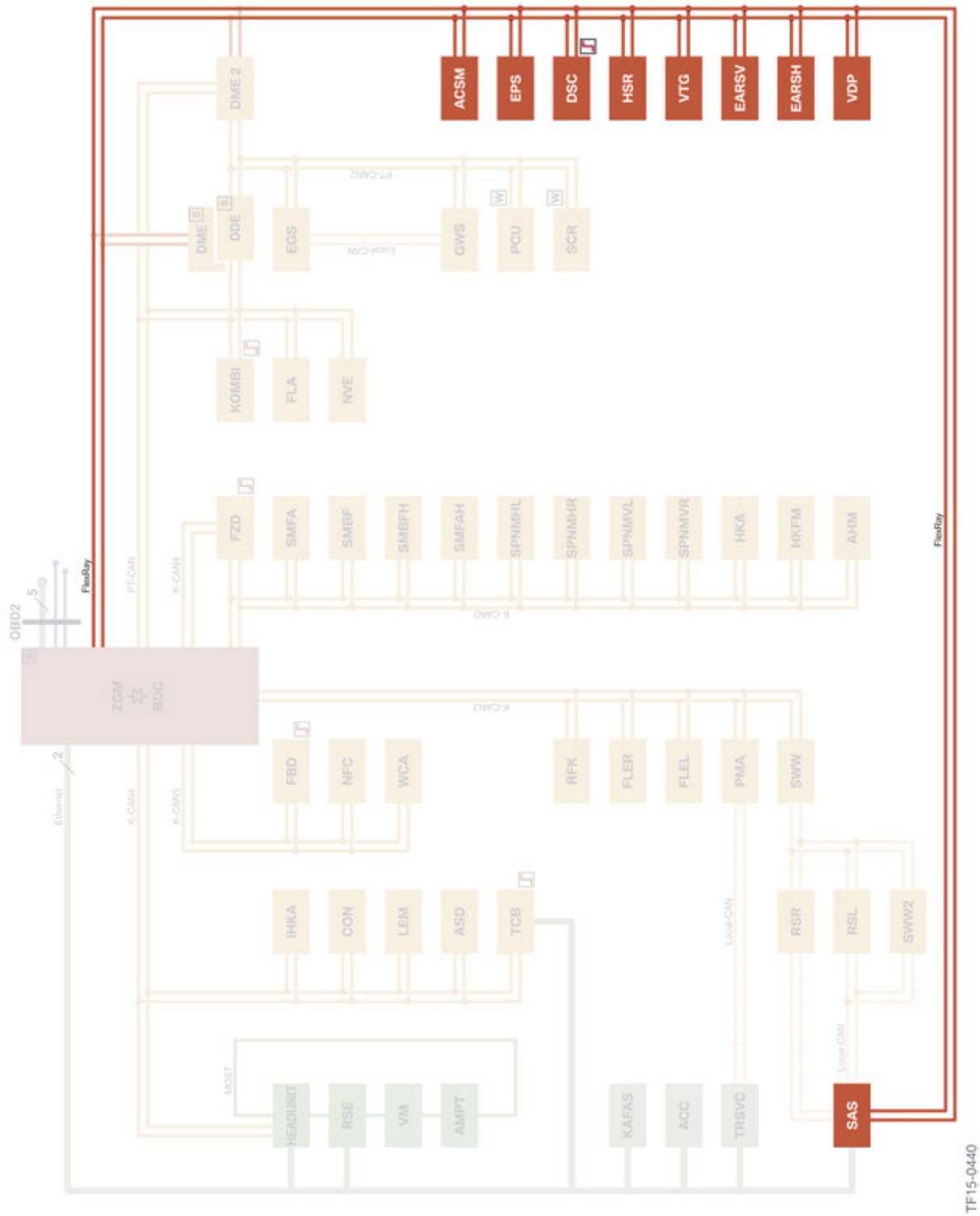

Bus overview G12

G12 Chassis and Suspension
6. Driving Stability Control

Index	Explanation
ACC	Active cruise control
ACSM	Crash Safety Module
AHM	Trailer module (Not for US)
AMPT	Amplifier Top (top high fidelity amplifier)
ASD	Active Sound Design
BDC	Body Domain Controller
CON	Controller
DDE	Digital Diesel Electronics (Not for US)
DME	Digital Motor Electronics
DME2	Digital Engine Electronics 2
DSC	Dynamic Stability Control
EARSVH	Electric active roll stabilization rear
EARSVV	Electric active roll stabilization front
EGS	Electronic transmission control
EPS	Electromechanical Power Steering
FLA	High-beam assistant
FLER	Frontal Light Electronics Right
FLEL	Frontal Light Electronics Left
FZD	Roof function center
GWS	Gear selector
HEADUNIT	Head unit
HKA Rear climate control	Automatic rear air-conditioning and heating
HKFM	Tailgate function module
HSR	Rear axle slip angle control
IHKA	Integrated automatic heating / air conditioning
KAFAS	Camera-based driver support systems
KOMBI	Instrument panel
LEM	Light Effect Manager
NFC	Near Field Communication
NVE	Night Vision Electronics
PCU	Power Control Unit
PMA	Parking manoeuvring assistant
RFK	Reversing camera
RSE	Rear Seat Entertainment

Index	Explanation
RSL	Radar Sensor Left (avoidance assistant)
RSR	Radar Sensor Right (avoidance assistant)
SAS	Optional equipment system
SCR	Selective Catalytic Reduction control unit (Not for US)
SMBF	Seat module, passenger
SMBFH	Seat module, passenger, rear
SMFA	Seat module, driver
SMFAH	Seat module, driver, rear
SPNMHL	Seat pneumatics module back left
SPNMHR	Seat pneumatics module back right
SWW	Lane change warning (main)
SWW2	Lane change warning (secondary)
TCB	Telematic Communication Box
TRSVC	Control unit for rear view camera and side view
VDP	Vertical Dynamic Platform
VM	Video Module (Not for US)
VTG	VTG control unit
WCA	Wireless charging tray
ZGM	Central gateway module

The control units that are relevant to driving dynamics are interconnected via the FlexRay bus. This bus is characterized above all by its high data transfer rate of 10 MBit/s.

The most important systems and their functions are described in more detail below.

G12 Chassis and Suspension

6. Driving Stability Control

6.1. Dynamic Stability Control (DSC)

Alongside the Vertical Dynamics Platform (VDP) control unit, the Dynamic Stability Control (DSC) represents the core element of the driving dynamics control systems used to increase active safety. It optimizes driving stability in all driving conditions and also traction when driving off and accelerating. It also identifies unstable driving conditions such as understeering or oversteering and helps maintain the vehicle on a steady course.

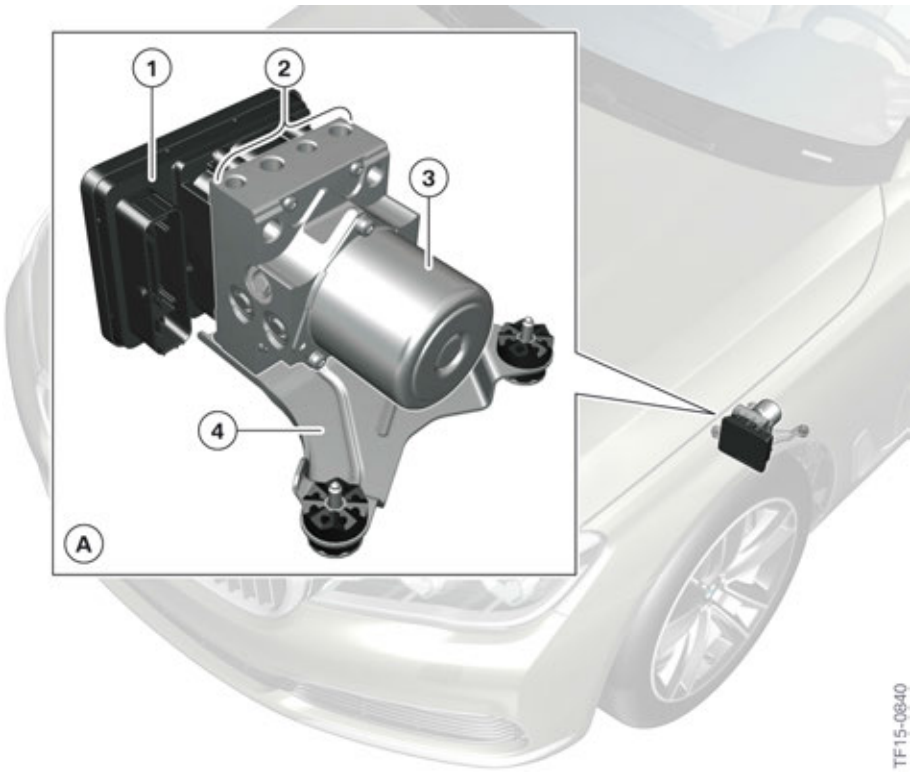

Installation position of Dynamic Stability Control (DSC) in the G12

Index	Explanation
A	DSC unit
1	DSC control unit
2	Brake line connections at the DSC hydraulic control unit
3	Return pump
4	Bracket

The Dynamic Stability Control (DSC) is located in the front lower area of the vehicle. The manufacturer designation is TRW DSC-EBC460. Due to the different connection diameters of the brake lines, channel confusion of the various hydraulic lines is not possible.

G12 Chassis and Suspension

6. Driving Stability Control

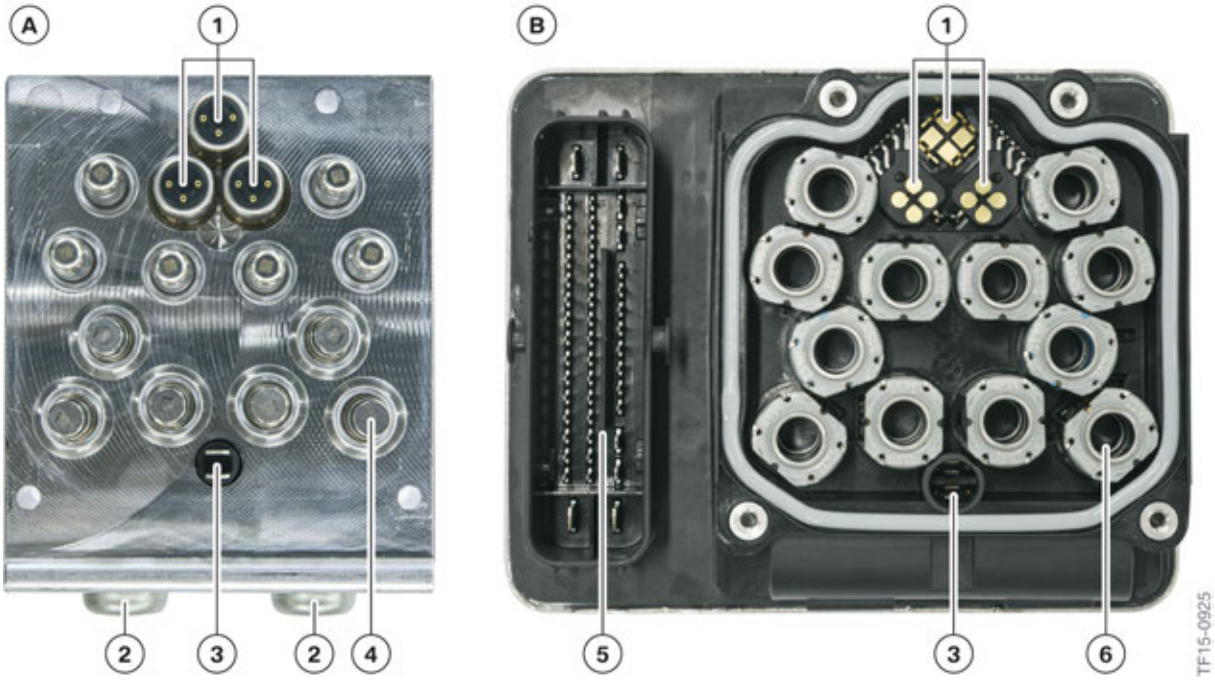

DSC unit in the G12

Index	Explanation
A	DSC hydraulic unit
B	DSC control unit
1	Pressure sensors
2	Hydraulic damping elements
3	Return pump activation
4	Solenoid valves (12x)
5	Control unit connector
6	Solenoid valve coils (12x)

The DSC control unit and the DSC hydraulic control unit are screwed together. The DSC control unit can be replaced individually to reduce servicing costs.

In older series, the different driving dynamics systems are connected via the Integrated Chassis Management (ICM) control unit. The control unit of the Dynamic Stability Control (DSC) in the G12 has an additional storage element (black box) in which some of the functions of the Integrated Chassis Management (ICM) are stored. The different driving dynamics control systems are coordinated perfectly by means of the algorithms stored in the black box.

The functions of the tire pressure control (TPMS) and electric parking brake (EPB) were integrated in the DSC control unit.

6.1.1. Hydraulic circuit diagram

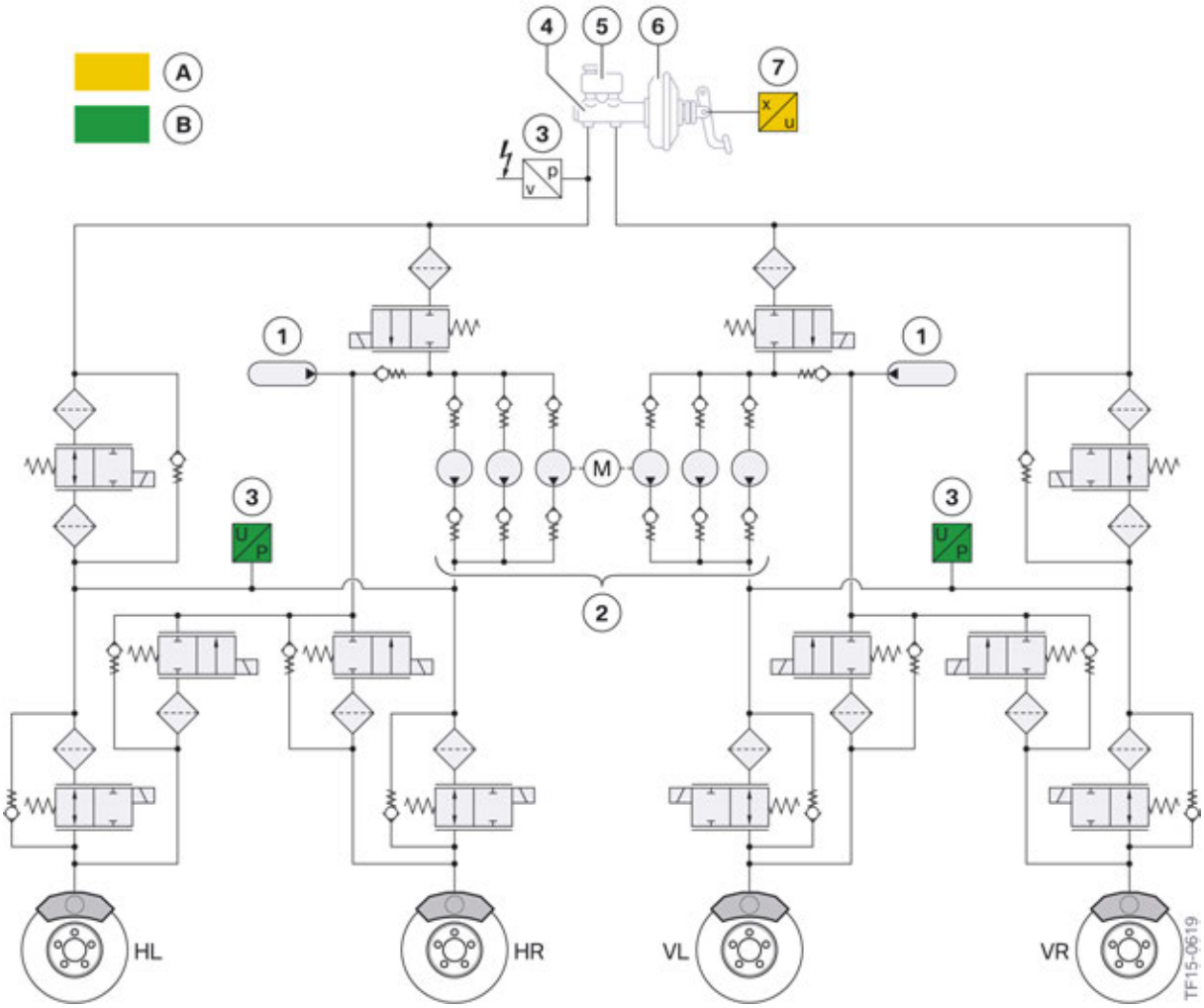

Hydraulic circuit diagram of TRW DSC-EBC460

Index	Explanation
A	Installed only on hybrid version
B	Only for optional equipment active cruise control with Stop & Go function
1	Hydraulic damping elements
2	6-piston pump
3	DSC pressure sensor
4	Brake master cylinder
5	Brake fluid expansion tank
6	Brake servo
7	Brake pedal travel sensor
AV	Exhaust valves

Index	Explanation
EV	Intake valves
HL	Rear axle on left
HR	Rear axle on right
TV	Separator valves
UPS	Changeover valves
VL	Front axle on left
VR	Front axle on right

Different DSC versions are used depending on the drive type and equipment range. In the hybrid version, there is an additional brake pedal travel sensor on the footbrake lever.

If the vehicle is equipped with the optional equipment “Active cruise control with Stop & Go function”, there are 2 additional pressure sensors in the hydraulic unit.

6.1.2. Functions

The following table provides an overview of the different functions of the DSC unit.

Function	Explanation
Antilock Brake System (ABS)	Prevents blocking of individual wheels when braking through targeted modulation of the brake pressures. Vehicle steerability is maintained.
Dynamic Stability Control (DSC)	If the vehicle starts to understeer or oversteer, it is stabilized by targeted brake interventions at individual wheels.
Dynamic Traction Control (DTC)	This is a special mode of the Dynamic Stability Control (DSC). In interaction with ASC and DSC, this mode features extended intervention thresholds and permits an even sportier driving style without interventions on normal surfaces as well as maximum propulsion on loose ground such as snow, sand or coarse gravel.
Cornering Brake Control (CBC)	Prevents the vehicle from turning in when it is braked lightly under high lateral acceleration forces by means of asymmetrical control of the brake pressure. The cornering stability is improved.
Automatic Stability Control (ASC)	Prevents the drive wheels from spinning by targeted braking of these wheels and adaptation of the drive torque delivered by the engine. Vehicle propulsion is optimized as a result and driving stability is maintained.
Dynamic Brake Control (DBC)	In the event of panic braking initiated by the driver, the system supports the driver by automatically immediately applying the maximum brake pressure to ensure the best possible deceleration.
Automatic Differential Brake (ADB-X)	Replicates the function of a differential lock. If a wheel displays a tendency to spin, this wheel is automatically braked so that propulsion can still be achieved via the other wheel of the driven axle.
Trailer stabilization control	Automatically detects when a vehicle with trailer is starting to snake, stabilizes the outfit by targeted brake interventions and simultaneously decelerates it to an uncritical speed for snaking.

6. Driving Stability Control

Function	Explanation
Brake standby	Builds up a moderate brake pressure in the system when the driver takes his foot off the accelerator pedal very quickly. The brake pads are applied slightly as a result. The braking effect then acts more quickly if the driver then performs panic braking.
Dry by applying brake	Depending on operation of the wiper, applies the brake pads gently at intervals in order to dry the brake discs. The braking effect is significantly improved by this when the vehicle is braked.
Fading support	Supports the driver when braking if the brake temperature has become very high due to an extreme driving style and the desired deceleration can be achieved only by applying a higher brake force.
Drive-off assistant	Holds the vehicle for approximately 1.5 s on uphill gradients when the driver releases the brake to drive off. This allows the driver to drive off comfortably without the vehicle rolling away on its own.
Automatic Hold	Automatically holds the vehicle after it has come to a standstill without it being necessary to still press the brake when the drive position is selected. The brake is automatically released when the accelerator pedal is pressed and the vehicle drives away normally. The function can be switched on and off by means of a button.

⚠

If a trailer tow hitch is retrofitted, the function “trailer stabilization logic” must be encoded in the DSC control unit.

G12 Chassis and Suspension

6. Driving Stability Control

6.1.3. System wiring diagram

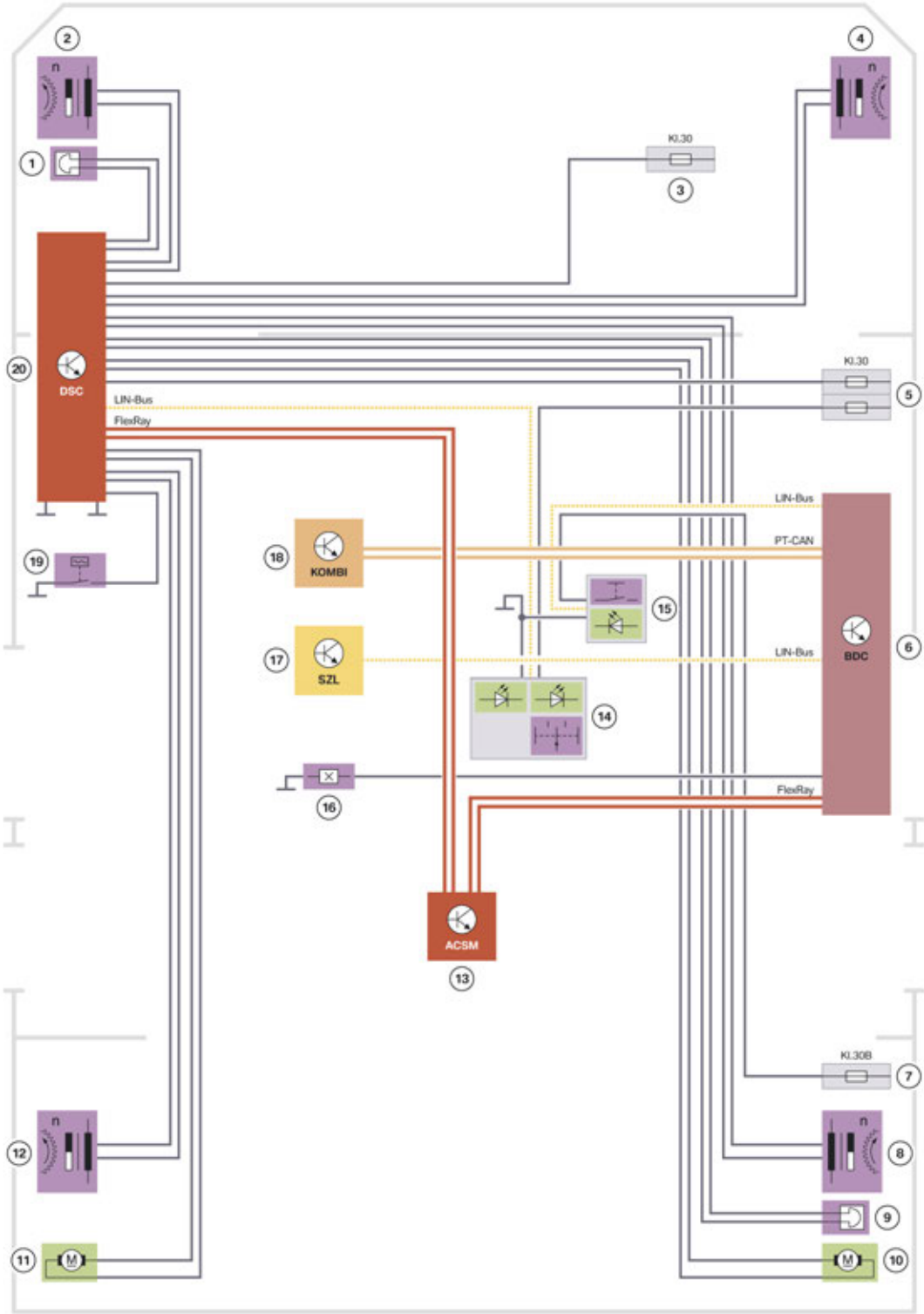

System wiring diagram for the Dynamic Stability Control (DSC) in the G12

G12 Chassis and Suspension

6. Driving Stability Control

Index	Explanation
1	Brake pad wear sensor, front left
2	Wheel-speed sensor, front left
3	Power distribution box, engine compartment
4	Wheel-speed sensor, front right
5	Power distribution box, front right
6	Body Domain Controller (BDC)
7	Rear right power distribution box
8	Wheel speed sensor, rear right
9	Brake pad wear sensor, rear right
10	Actuator, electric parking brake rear right
11	Actuator, electric parking brake rear left
12	Wheel speed sensor, rear left
13	Crash Safety Module (ACSM)
14	Button for electric parking brake and for Automatic Hold function
15	DSC button
16	Brake light switch
17	Steering column switch cluster
18	Instrument panel (KOMBI)
19	Brake fluid level switch
20	Dynamic Stability Control (DSC)

6.2. Steering

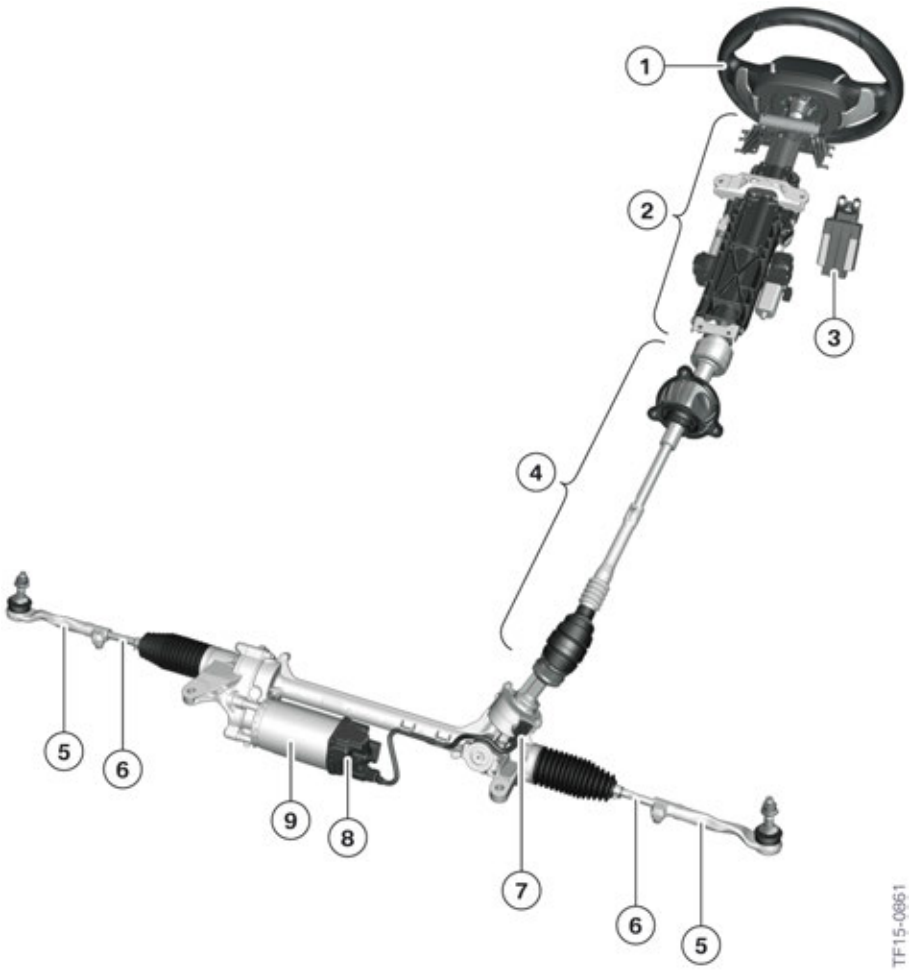

Overview of steering in the G12

Index	Explanation
1	Steering wheel
2	Upper steering column with steering column adjustment
3	Control unit for steering column adjustment
4	Lower steering column with sliding piece
5	Track rod end
6	Track rod
7	Steering-torque sensor
8	EPS control unit (Electronic Power Steering)
9	Electric motor for EPS (Electronic Power Steering)

In electric steering systems, the support torque is generated by means of an electric motor.

In addition to the pure support function, the front wheels can in principle be made to perform any steering movement independently of the manual torque applied at the steering wheel. This system is therefore a prerequisite for realization of a large number of assistance functions such as the Parking Manoeuvring Assistant (PMA).

The Electronic Power Steering (EPS) permits a reduction in the average fuel consumption of approximately 0.3 l per 100 km / 62 miles. A further advantage is that no oil is needed for steering assistance.

6.2.1. Steering wheel

There are 3 different steering wheel designs available for the G12, but all G12's for the US market will receive the sport steering wheel with paddle shift as standard equipment.

Steering wheel versions in the G12

Index	Explanation
A	Sports steering wheel with shift paddles (Standard)
B	Luxury steering wheel (Not for US)
C	Standard steering wheel (Not for US)

Steering wheel diameter of the different versions:

- Sports steering wheel = 382 mm
- Luxury steering wheel = 384 mm (Not for US)
- Standard steering wheel = 385 mm (Not for US)

Additional functions are optionally possible:

- Heated leather rim.
- Transmission of haptic vibrations (steering wheel vibration)
  For assistance systems such as lane departure or lane change warning.
- Hands-Off detection
  For the traffic jam assistant function.
- Shift paddles (standard)
  For the manual shift function with the automatic Sport transmission (SA 2TB).

6.2.2. Steering column adjustment

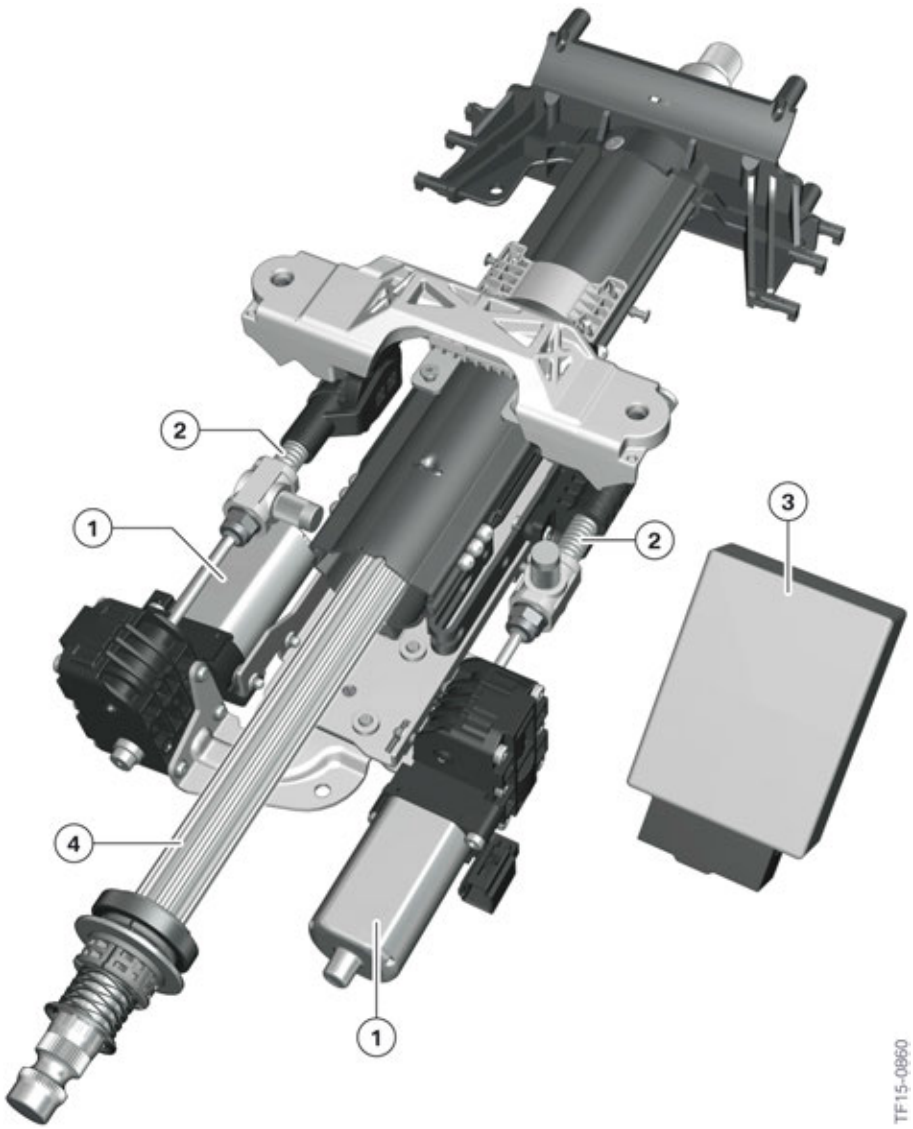

Steering column adjustment in the G12

Index	Explanation
1	Electric motor
2	Spindle
3	Control unit for steering column adjustment
4	Steering shaft

The steering column with electrical longitudinal and height adjustment allows the driver to assume an optimum sitting and driving position through seamless adjustment of the steering wheel position.

Adjustment range:

- Height adjustment = +/- 20 mm
- Forward/back adjustment = - 20 mm/+40 mm

6.2.3. Version overview

The G12 is equipped with the following different steering systems:

- Standard steering 12 V
- Integral Active Steering 24 V

Components	Standard steering 12 V	Integral Active Steering 24 V
Electronic Power Steering with normal rack geometry	X	
Electronic Power Steering with variable rack geometry		X
12 V main battery	X	X
12 V auxiliary battery		X
Power Control Unit (PCU) (DC/DC converter 150 W)		X
Rear axle slip angle control (HSR)		X

The following graphic shows the installation positions of the different system components.

G12 Chassis and Suspension

6. Driving Stability Control

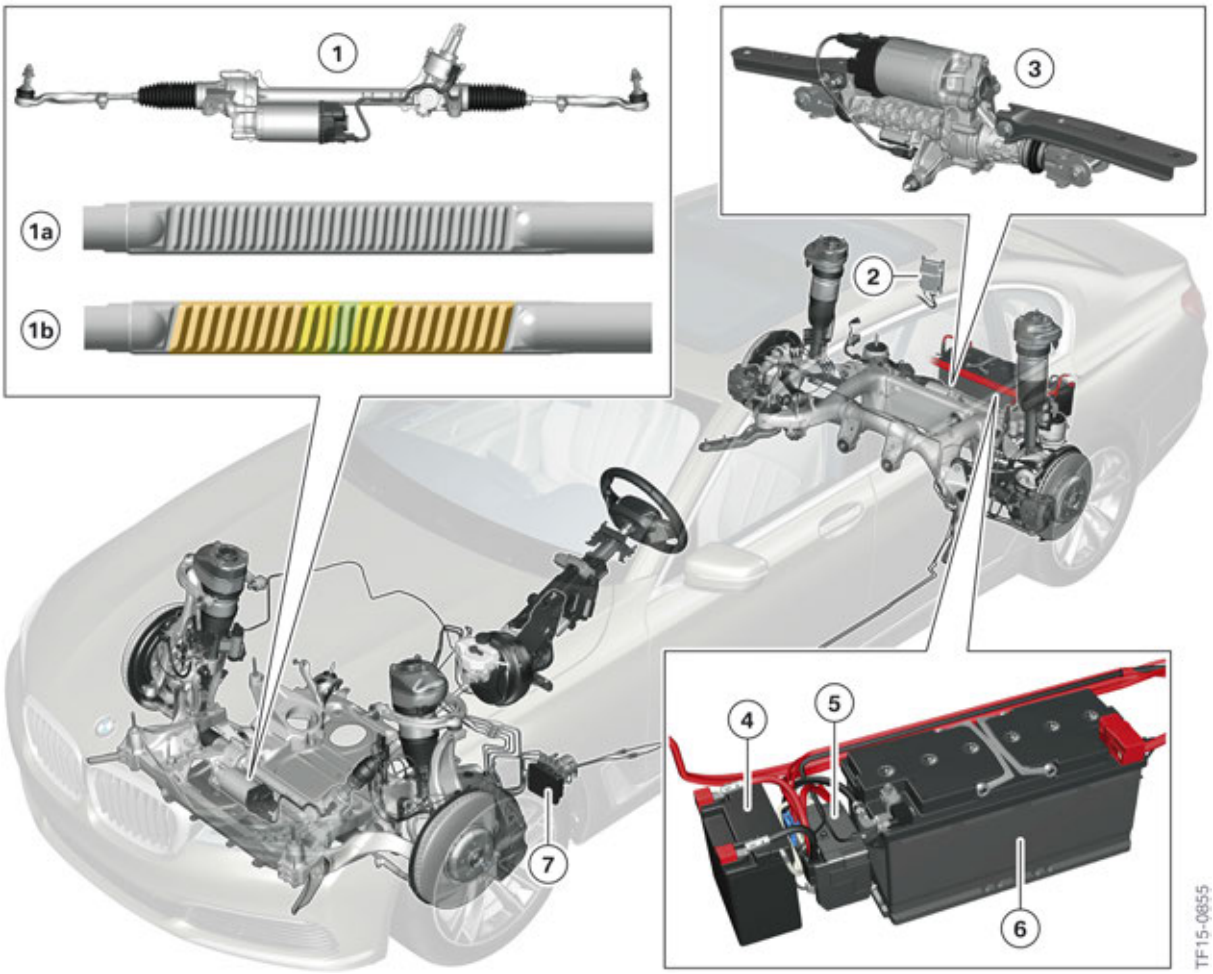

Overview of the steering systems of the G12

Index	Explanation
1	Electromechanical Power Steering
1a	Conventional rack geometry (standard steering)
1b	Variable rack geometry (Integral Active Steering)
2	Power Control Unit (PCU) (only for 24 V steering)
3	Rear axle slip angle control (HSR) (Integral Active Steering)
4	12 V auxiliary battery (only for 24 V steering)
5	Separating element (only for 24 V steering)
6	12 V battery
7	Dynamic Stability Control (DSC)

With the standard steering, the G12 is equipped with conventional electromechanical power steering (12 V) with normal rack geometry.

The optional equipment Integral Active Steering now no longer consists of an active steering system with variable ratio transmission, but has been replaced by an electromechanical power steering system with variable rack (sport steering) as well as rear axle slip angle control (HSR). Depending on vehicle options, a 12 V or 24 V steering system is used. The rear axle slip angle control (HSR) always operates with a 12 V voltage.

The following table provides an overview of the different voltage levels of the electric steering in the optional equipment Integral Active Steering 2VH.

Model	Engine	Rear-wheel drive with Integral Active Steering	All-wheel drive with Integral Active Steering
740i	B58	24 V	—
750i/750i xDrive	N63	24 V	24 V

6.2.4. Integral Active Steering

Front axle

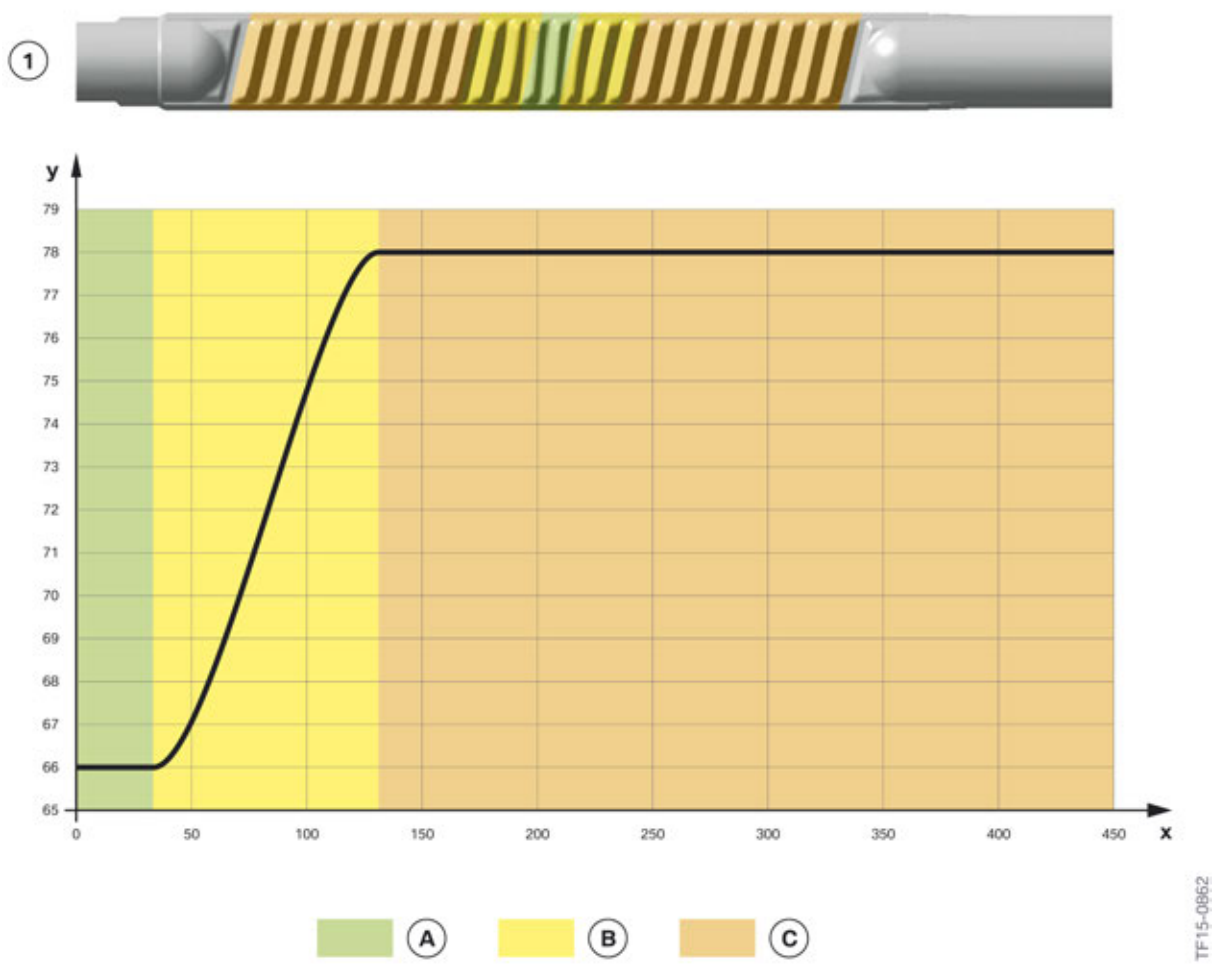

Ratio of the variable rack geometry (OE Integral Active Steering) in the G12

Index	Explanation
A	More indirect steering gear ratio in the center position of the variable rack (0° - 45°)
B	Transitional range (45° - 130°)
C	Direct steering gear ratio outside the center position of the variable rack (> 130°)
X	Steering angle in °
y	Steering gear ratio in mm/steering wheel turn
1	Variable rack geometry (Integral Active Steering)

The variable steering gear ratio in the optional equipment Integral Active Steering is accomplished by the geometry/pitch of the toothed gear of the rack. Around the center position of the steering gear, the steering system behaves accurately with steady directional stability. As the steering angle moves away from the center position, the ratio becomes increasingly more direct.

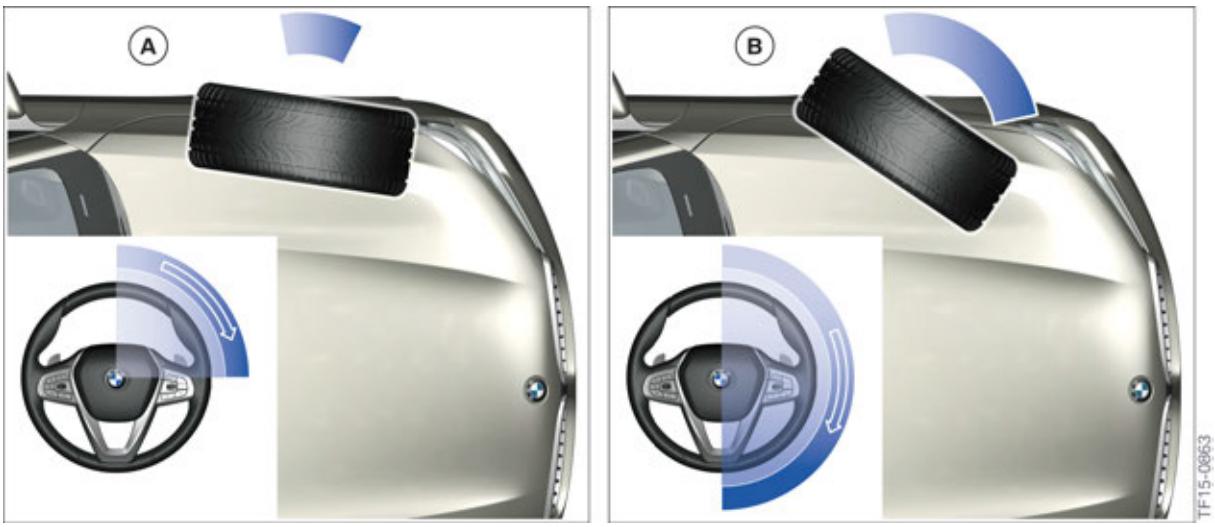

Steering angle of the Integral Active Steering on the front axle of the G12

Index	Explanation
A	More indirect steering gear ratio (variable rack geometry)
B	Direct steering gear ratio (variable rack geometry)

Rear axle

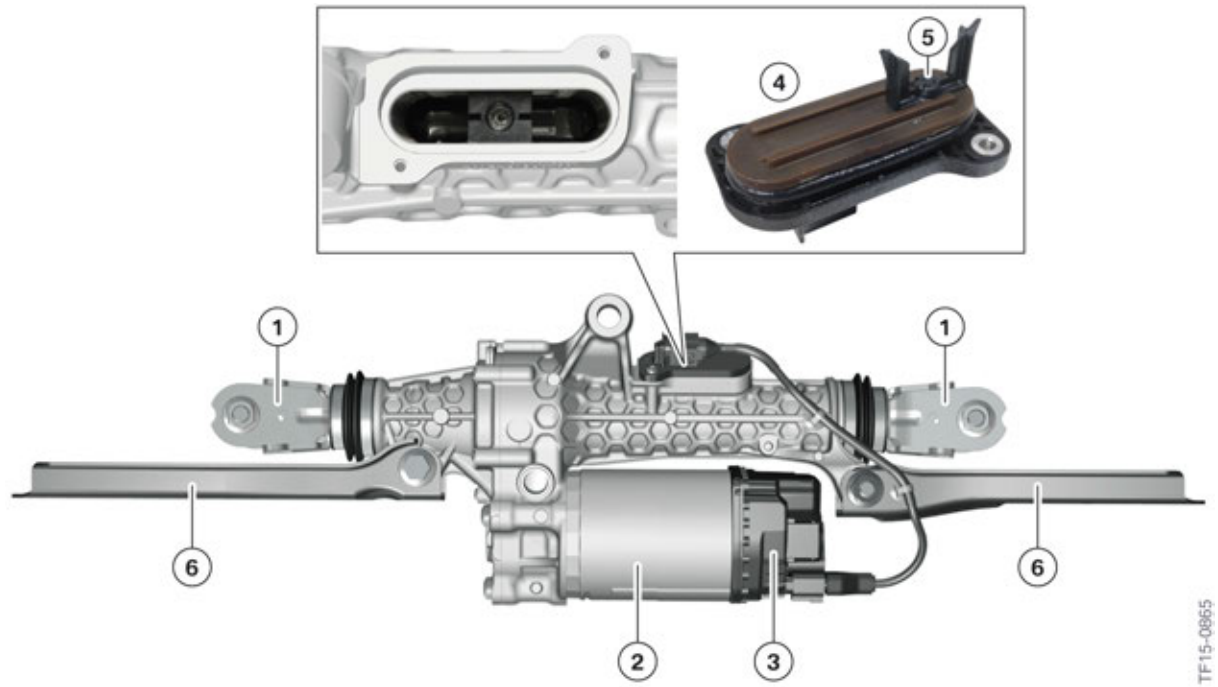

Rear axle slip angle control (HSR) in the G12

Index	Explanation
1	Track control arm mounts
2	Electric motor
3	HSR control unit (rear axle slip angle control)
4	Spindle position sensor (PLCD sensor)
5	Permanent magnet
6	Carrier plate

The rear axle slip angle control (HSR) mounted on the rear carrier permits a maximum steering angle of the rear wheels of +/- 3°. As a result, it was possible to reduce the turning radius by approximately 1 m in comparison with vehicles without rear axle slip angle control (HSR). The rear axle slip angle control is available from a speed of approximately 5 km/h / 3 mph up to the maximum speed.

The request to adjust the steering angle at the rear axle is issued by the Dynamic Stability Control (DSC). A spindle drive inside the component is rotated via the electric motor. This produces a linear movement at the two track control arms. Using the position sensor, the control unit of the rear axle slip angle control (HSR) can determine the linear displacement and thus calculate the steering angle of the two rear axle wheels.

The spindle drive of the rear axle slip angle control (HSR) is self-inhibiting. This means that the vehicle has the identical drivability to a vehicle without rear axle slip angle control (HSR) in the event of system failure.

A special fixture is required for alignment in order to assemble the carrier plates. This is **not** available in Service. For this reason, the carrier plates on the rear axle slip angle control (HSR) must **not** be undone. If this is not observed, the wheel alignment on the rear axle will become incorrectly adjusted.

The carrier plates of the rear axle slip angle control (HSR) must **not** be undone in Service!

Operating strategy

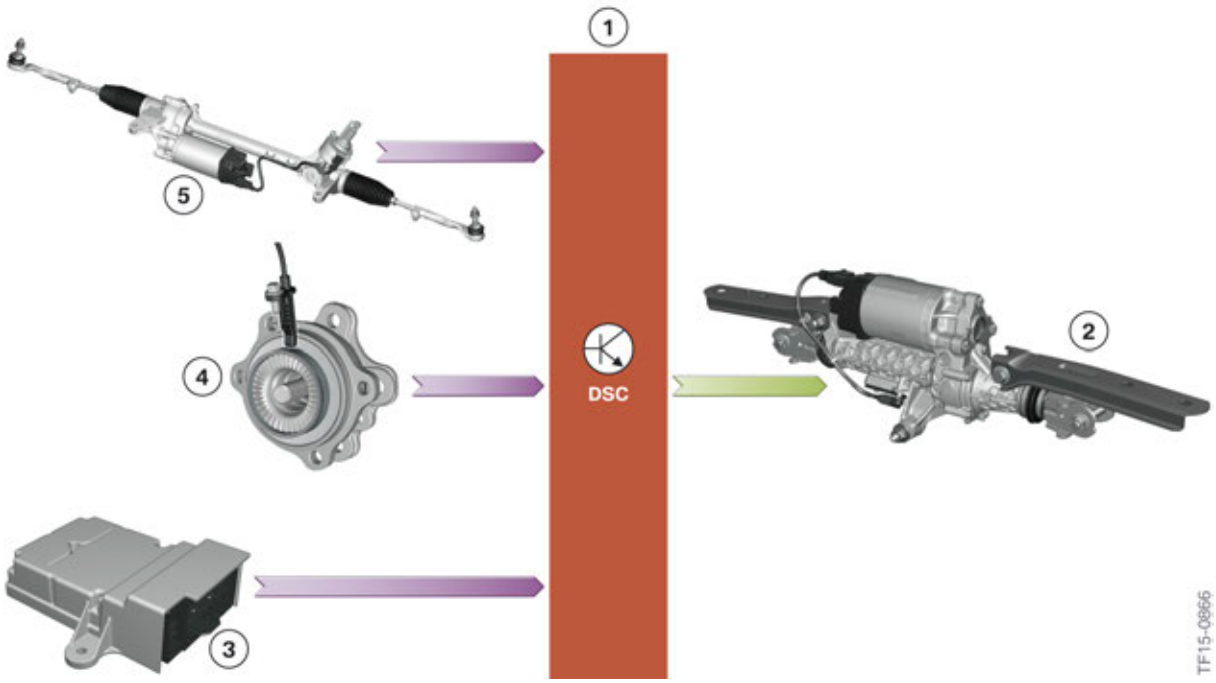

Input and output diagram of the Integral Active Steering in the G12

Index	Explanation
1	Dynamic Stability Control (DSC)
2	Rear axle slip angle control (HSR)
3	Yaw rate and lateral acceleration (ACSM)
4	Wheel speeds
5	Steering angle (EPS)

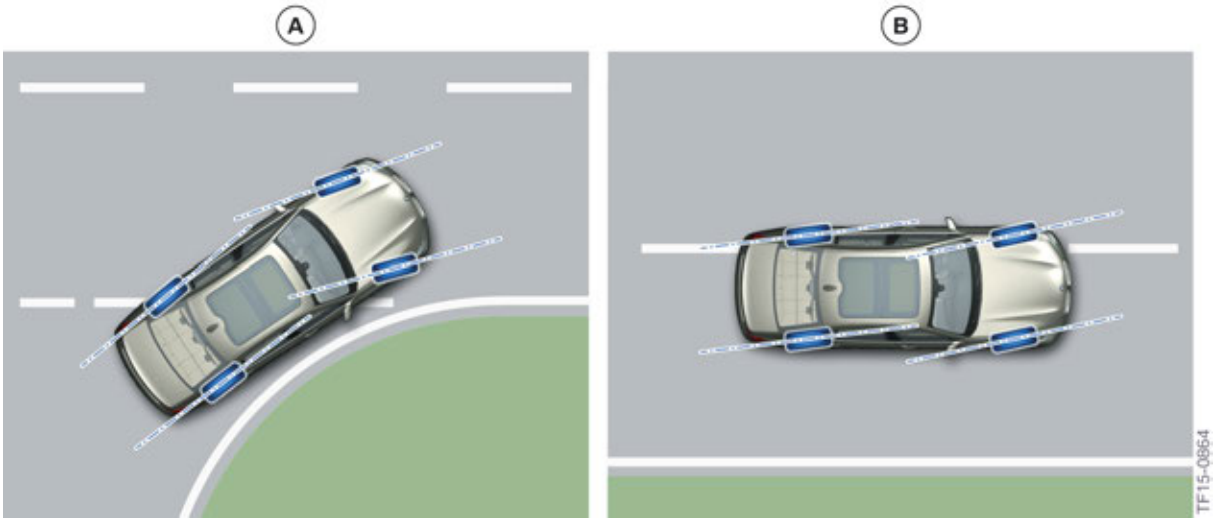

Operating strategy of the Integral Active Steering in the G12

Index	Explanation
A	Opposite steering
B	Parallel steering

In the speed range up to approximately 60 km/h / 37 mph, the rear axle slip angle control (HSR) steers in the opposite direction to the steering angles of the front axle steering. This permits increased vehicle manoeuvrability.

As from the speed range of approximately 60 km/h / 37 mph, the rear axle slip angle control (HSR) steers in the same direction. This improves the directional stability of the vehicle.

Driving dynamics control interventions when cornering

When changing lanes quickly, all vehicles have a tendency to produce a significant yaw response and can sometimes start to oversteer. If the Dynamic Stability Control (DSC) detects a deviation between the driver wish and vehicle response, the vehicle is stabilized by means of a steering intervention at the rear axle. The speed of the stabilizing intervention is such that it is hardly discernible by the driver. It is possible to largely do without decelerating or DSC brake interventions. As a result, the vehicle is more stable and the driving dynamics are preserved.

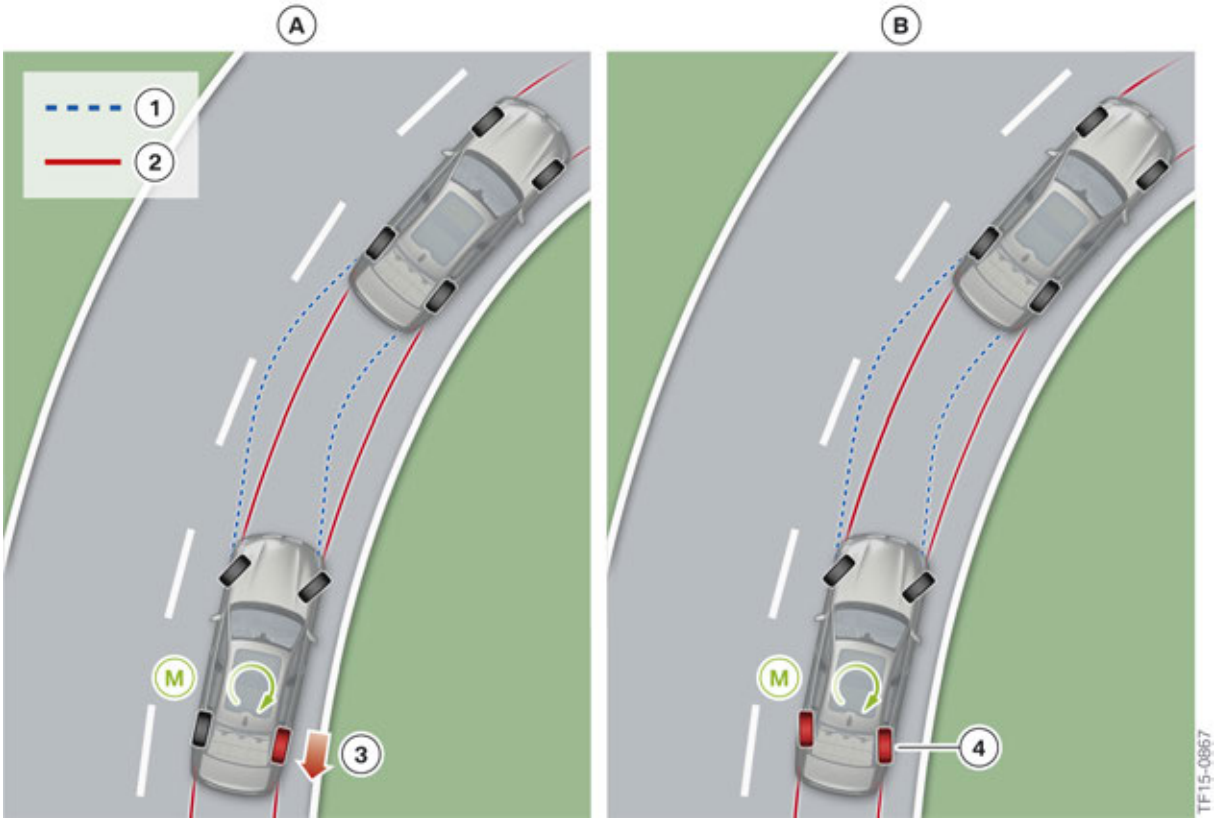

Possible driving dynamics interventions of the DSC and Integral Active Steering when cornering

Index	Explanation
A	Prevention of understeer by brake interventions at individual wheels (DSC)
B	Prevention of understeer by steering interventions at the rear axle (HSR)
M	Yaw moment acting on the vehicle due to an intervention by the driving dynamics control
1	Course of an understeering vehicle
2	Course of a vehicle with neutral drivability
3	Individual brake modulation (DSC)
4	Steering intervention at the rear axle (HSR)

If the driver underestimates a bend when driving rapidly, he may be surprised by sudden understeer. The rear axle slip angle control (HSR) can also perform a corrective intervention in understeer situations and thus additionally increases active safety.

Driving dynamics control on different surfaces

Hard braking manoeuvres on roadways that are slippery on one side make the vehicle yaw to the vehicle side with more grip. In the event of emergency braking, the driver of a conventional vehicle must take corrective action. With this so-called µ-split braking, the Dynamic Stability Control (DSC) provides a stabilizing yaw moment via a steering intervention at the rear axle.

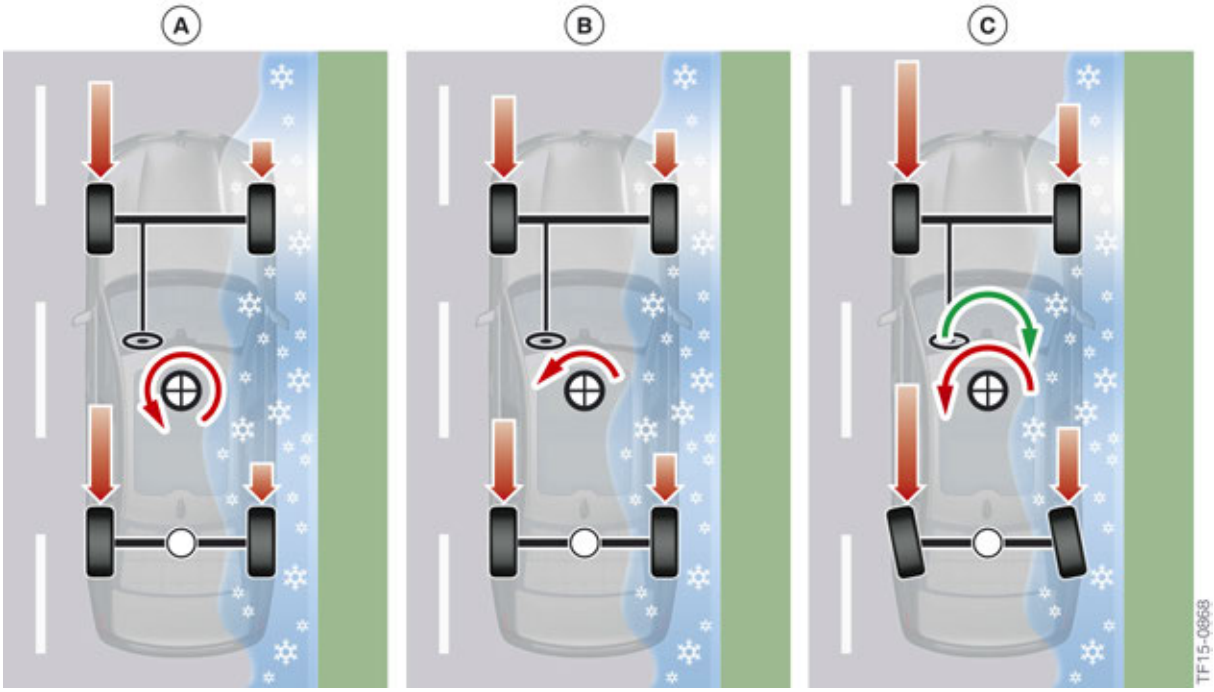

µ-split braking manoeuvres with different driving dynamics systems

Index	Explanation
A	Vehicle **without** DSC
B	Vehicle with DSC
C	Vehicle with DSC and rear axle slip angle control (HSR) (optional equipment Integral Active Steering SA 2VH)

Further to A) Without DSC

When braking with a vehicle without DSC, maximum brake force is supported on the dry side of the road and only low brake force on the wet or icy side. An anti-clockwise yaw moment is produced which can lead to the vehicle skidding to the right.

Further to B) With DSC

When braking with a vehicle equipped with DSC, the brake forces at the wheels are metered so that the yaw moment acting on the vehicle is reduced. The vehicle therefore remains controllable. The stopping distance may be increased slightly.

Further to C) With DSC and rear axle slip angle control (HSR)

When braking with a vehicle equipped with DSC and rear axle slip angle control (HSR) (optional equipment Integral Active Steering SA 2VH), the DSC control unit calculates the steering angle for the rear wheels. The actuators of the rear axle slip angle control (HSR) convert the calculated steering angle into an active steering angle at both rear wheels. The resultant stabilizing yaw moment allows the maximum brake forces to be applied in order to achieve the shortest possible stopping distance. The perfect interaction of steering and brake intervention therefore increases active safety and enhances the driving dynamics of the vehicle.

6.2.5. Service information

In the event of a repair, the steering gear can be fully lowered. This eliminates the need for complex axle disassembly and repair costs are reduced significantly.

Steering angle

The steering angle is calculated by the control unit of the electromechanical power steering using the rotor angle sensor. In the event of a loss of the voltage supply, this stored value is lost and must be taught again. This can be done statically by turning the wheels to the right and left with the engine running or dynamically when driving slowly.

Driving with snow chains

Setting menu for driving with snow chains in the G12

Index	Explanation
A	Snow chain mode deactivated
B	Snow chain mode activated

6. Driving Stability Control

In order to avoid damage to the wheel arches when driving with snow chains, the rear axle slip angle control (HSR) must be fixed in straight-ahead position. The driver can do this manually using the controller on the Central Information Display (CID). The maximum permitted speed is 50 km/h (31 mph). When this speed is exceeded, the rear axle slip angle control (HSR) switches on again automatically.

6.2.6. System wiring diagram

24 V steering

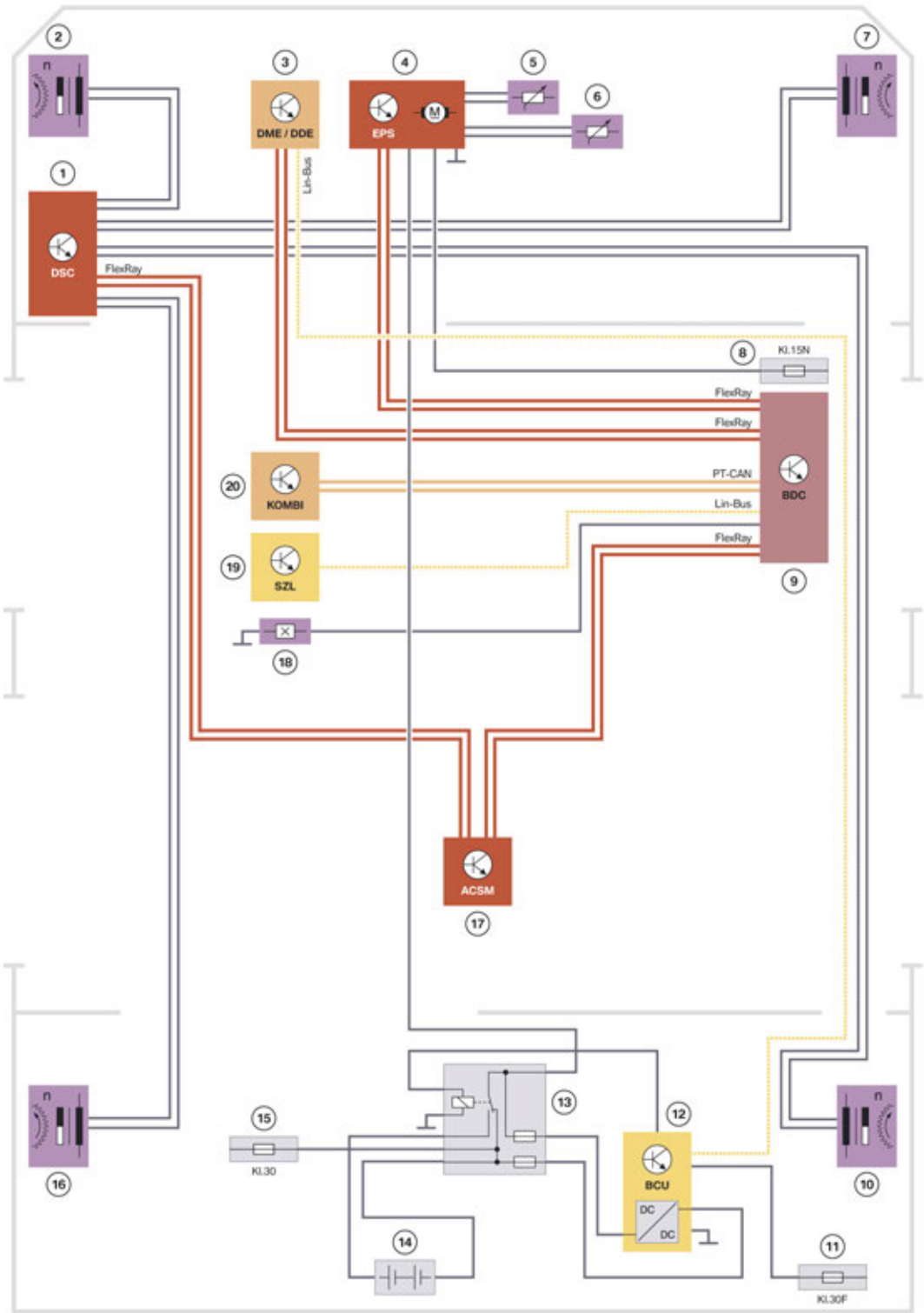

System wiring diagram for 24 V steering in the G12

G12 Chassis and Suspension

6. Driving Stability Control

Index	Explanation
1	Dynamic Stability Control (DSC)
2	Wheel-speed sensor, front left
3	Engine control unit (DME)
4	Electronic Power Steering (EPS)
5	Steering-torque sensor 1
6	Steering-torque sensor 2
7	Wheel-speed sensor, front right
8	Power distribution box, front right
9	Body Domain Controller (BDC)
10	Wheel speed sensor, rear right
11	Rear right power distribution box
12	Power Control Unit (PCU) (DC/DC 150 W)
13	Separator
14	12 V auxiliary battery for 24 V steering
15	Positive battery terminal distributor
16	Wheel speed sensor, rear left
17	Crash Safety Module (ACSM)
18	Brake light switch
19	Steering column switch cluster (SZL)
20	Instrument panel (KOMBI)

Rear axle slip angle control (HSR)

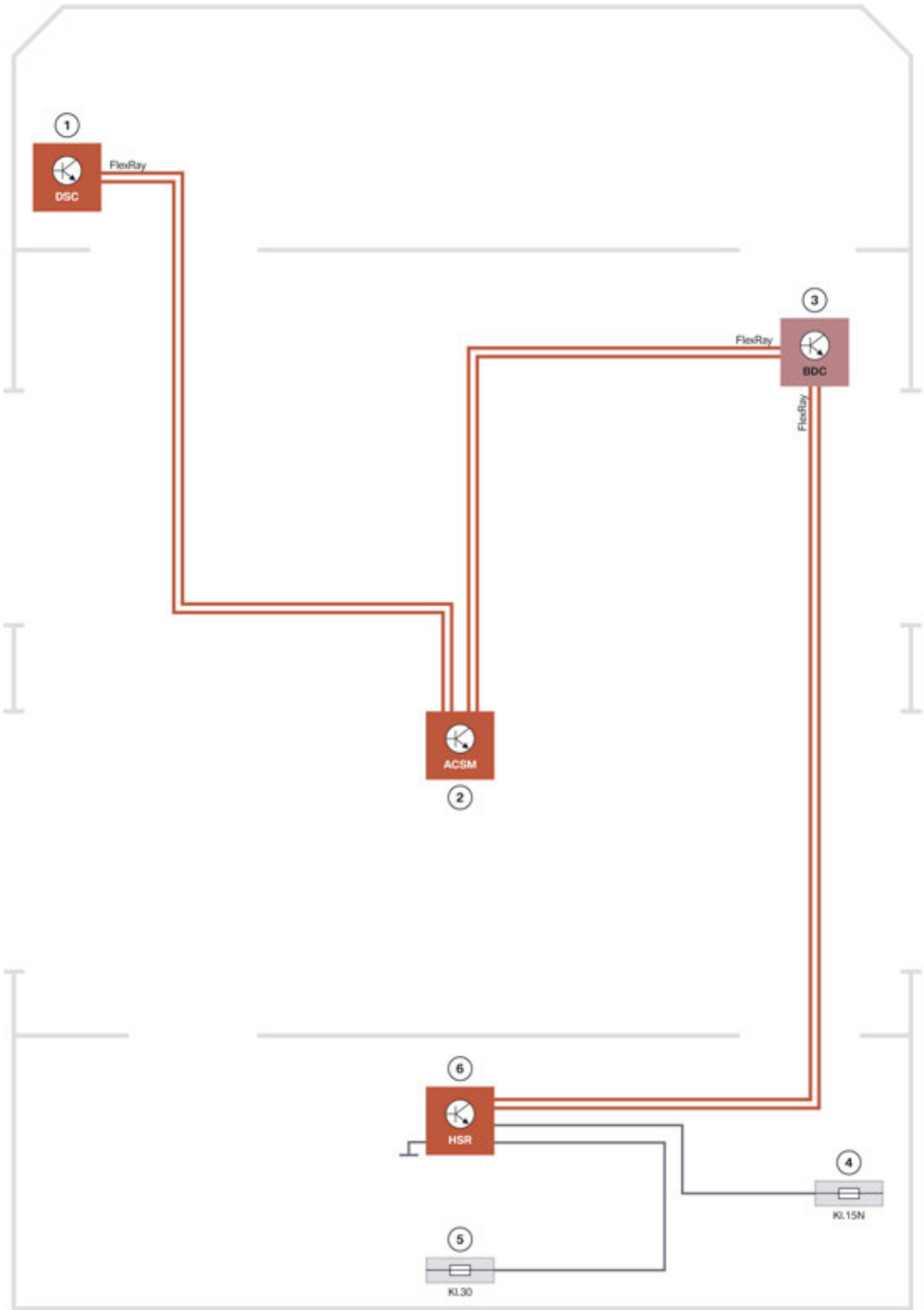

System wiring diagram for rear axle slip angle control (HSR) in the G12

G12 Chassis and Suspension

6. Driving Stability Control

Index	Explanation
1	Dynamic Stability Control (DSC)
2	Crash Safety Module (ACSM)
3	Body Domain Controller (BDC)
4	Rear right power distribution box
5	Positive battery terminal distributor
6	Rear axle slip angle control (HSR)

Electrically adjustable steering column

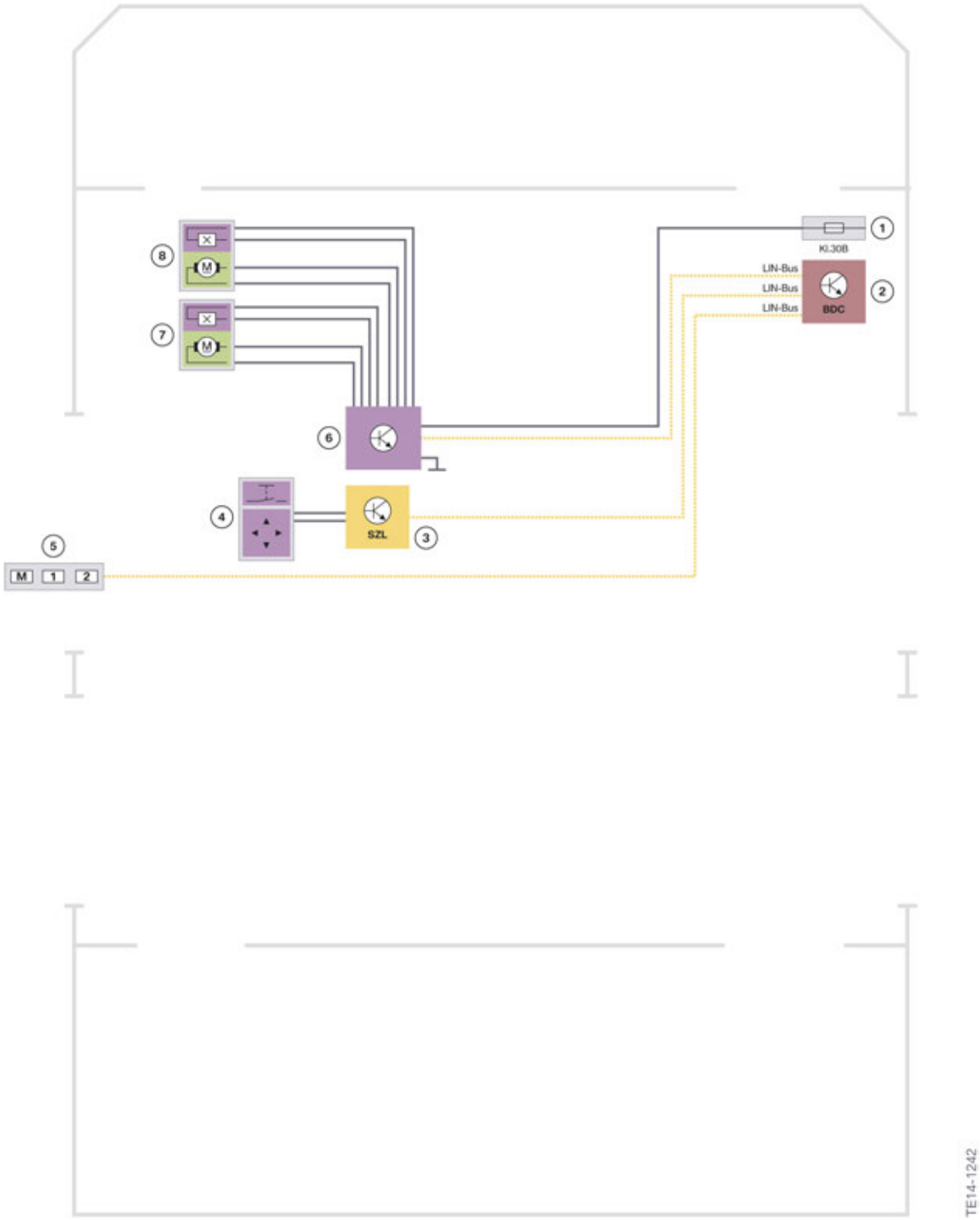

System wiring diagram for electrically adjustable steering column in the G12

Index	Explanation
1	Power distribution box, front right
2	Body Domain Controller (BDC)
3	Steering column switch cluster (SZL)
4	Button for steering column adjustment
5	Memory switch
6	Control unit for steering column adjustment
7	Electric motor (DC)
8	Electric motor (DC)

6.3. Electronic Damper Control (EDC)

In order to meet the high customer demands with respect to comfort and driving dynamics, the G12 is equipped as standard with Electronic Damper Control (EDC). The electronically controlled shock absorbers form a unit with the respective air suspension strut and cannot be replaced separately. There are 2 electric control valves on each shock absorber which allow the compression and rebound stages of the regulated shock absorbers to be adjusted separately from each other. This makes it possible to perfectly counteract the vibrations of the body and wheels. This increases safety, comfort and driving dynamics.

6.3.1. Shock absorber design

The shock absorbers are single-tube gas-filled shock absorbers. The gas cushion consists of nitrogen at a pressure of 16.5 bar. This is pressed together and thus compressed further by the oil displaced when the piston rod is retracted. The high gas pressure prevents foaming of the oil under all operating conditions and thus guarantees optimum shock absorber operation. In addition, the high gas pressure ensures that the piston rod is pressed out with a force of approximately 400 N (~ 40 kg). Compression of the shock absorber by hand is therefore hardly possible.

G12 Chassis and Suspension

6. Driving Stability Control

The following graphic shows the internal design of an electrically regulated shock absorber.

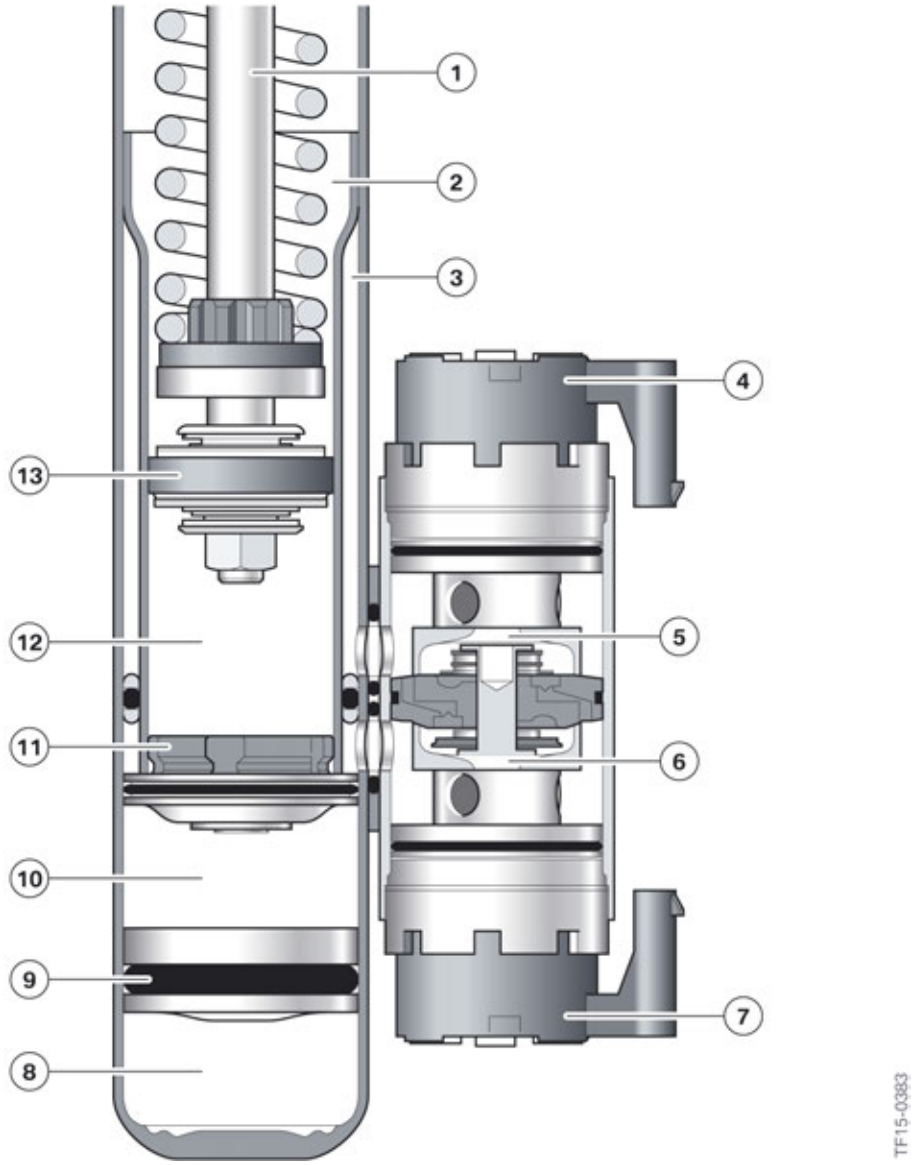

Design of EDC shock absorber in the G12

Index	Explanation
1	Piston rod
2	Working chamber
3	Overflow duct
4	Control valve, compression stage
5	Comfort valve, compression stage
6	Comfort valve, rebound stage
7	Control valve, rebound stage

Index	Explanation
8	Gas pressure chamber
9	Dividing piston
10	Balancing chamber
11	Bottom valve
12	Working chamber
13	Working piston

In order to permit a sporty driving style on good roads while still absorbing bumps on rough road surfaces as comfortably as possible, the oil flow inside the shock absorber can be variably adjusted. The changes in the oil flow change the forces acting on the shock absorber.

The shock absorber has 2 control valves, which allow separate adjustment of the damping force for rebound (rebound stage) and compression (compression stage).

The control valves adjust the damping force by changing a restrictor cross-section through which an oil flow is pressed. The following relationship exists between the restrictor cross-section and damping force:

- Large restrictor cross-section = low damping force.
- Small restrictor cross-section = high damping force.

The restrictor cross-section and thus the damping force can be adjusted seamless few milliseconds.

Compression stage

During compression, the shock absorber is pushed together telescopically and operated in the so-called compression stage.

Rebound

During rebound, the shock absorber is extended telescopically and operated in the so-called rebound stage.

6.3.2. System overview

The driving experience switch is used to configure the shock absorber adjustment setting.
It is possible to choose between a sportily firm or comfortably soft chassis and suspension setup.
The following table provides an overview of the setting options.

Driving mode	Characteristics
COMFORT PLUS	Comfortable
Comfort/ECO PRO	Balanced
Sport	Sports

G12 Chassis and Suspension

6. Driving Stability Control

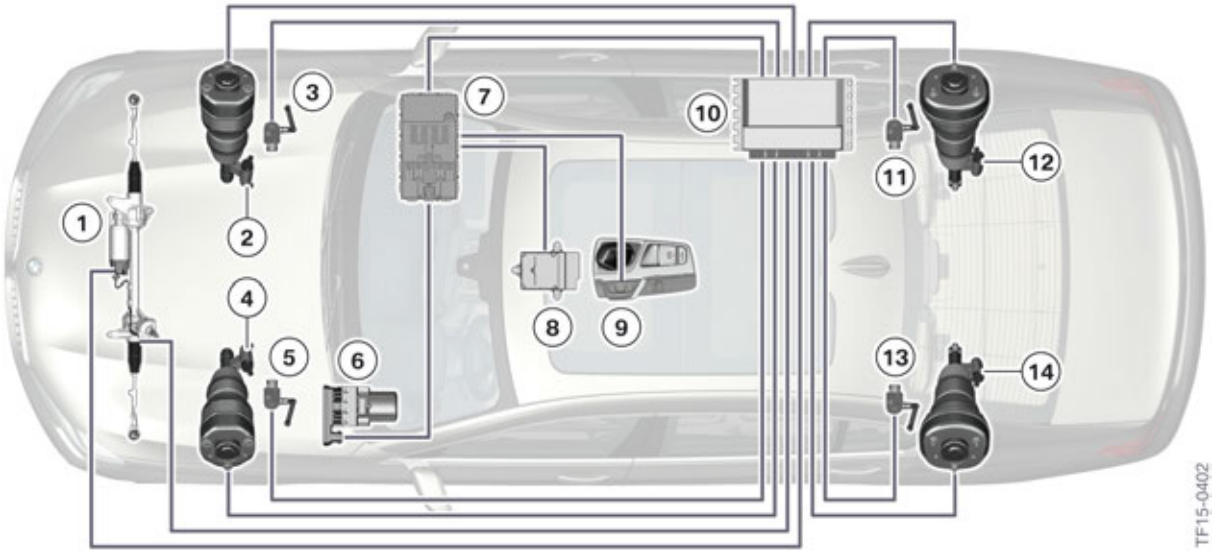

System overview of the Electronic Damper Control (EDC)

Index	Explanation
1	Electronic Power Steering (EPS)
2	Control valves for shock absorber adjustment, front right
3	Ride height sensor, front right
4	Control valves for shock absorber adjustment, front left
5	Ride height sensor, front left
6	Dynamic Stability Control (DSC)
7	Body Domain Controller (BDC)
8	Advanced Crash Safety Module (ACSM-High)
9	Driving experience switch
10	Vertical Dynamics Platform (VDP)
11	Ride height sensor, rear right
12	Control valves for shock absorber adjustment, rear right
13	Ride-height sensor, rear left
14	Control valves for shock absorber adjustment, rear left

The Electronic Damper Control (EDC) comprises the following components:

- 4 electrically controlled shock absorbers with 2 control valves each
- Vertical Dynamics Platform (VDP) control unit
- 4 ride height sensors for determination of wheel movement
- Sensor cluster for determination of body movement (lift, pitch and roll)

The Vertical Dynamics Platform (VDP) control unit uses various data such as body movement, transverse and longitudinal acceleration, steering angle and the road condition to calculate wheel-individual control commands for the electrical control valves in the shock absorbers. In this way, the damping force of the individual shock absorbers is continuously changed approximately 100 times per second. This means that demand-based adjustment of the damping force is always possible corresponding to the driving situation.

Fewer vehicle body movements are permitted if a sportier driving mode is selected. The shock absorbers are adjusted to a hard setting more quickly and more often. This automatically results in a loss of comfort.

In the standard equipment configuration, information about the vertical body movements (pitch, roll and lift) is made available by the Advanced Crash Safety Module (ACSM-High). The retraction and extension speeds of the shock absorbers are determined by means of the ride height sensors.

If the vehicle is equipped with the optional equipment “Active Comfort Drive” (SA 2VS), there are additional wheel acceleration sensors. These are used among other things for more precise regulation of the Electronic Damper Control (EDC).

The following table shows the different components used depending on the chassis and suspension package.

Component	Basic chassis and suspension	Active Comfort Drive
Wheel acceleration sensors	—	X
ACSM-High	X	—
ACSM-Low	—	X

A more detailed description of the optional equipment “Active Comfort Drive” (SA 2VS) is provided in a later chapter.

6.3.3. Electrical shock absorber control

The control valves of the rebound and compression stages are activated via pulse-width modulated signals from the Vertical Dynamics Platform (VDP) control unit. The control valves are open in de-energized condition. The shock absorber is in the maximum soft setting in this condition.

Control of the compression stage

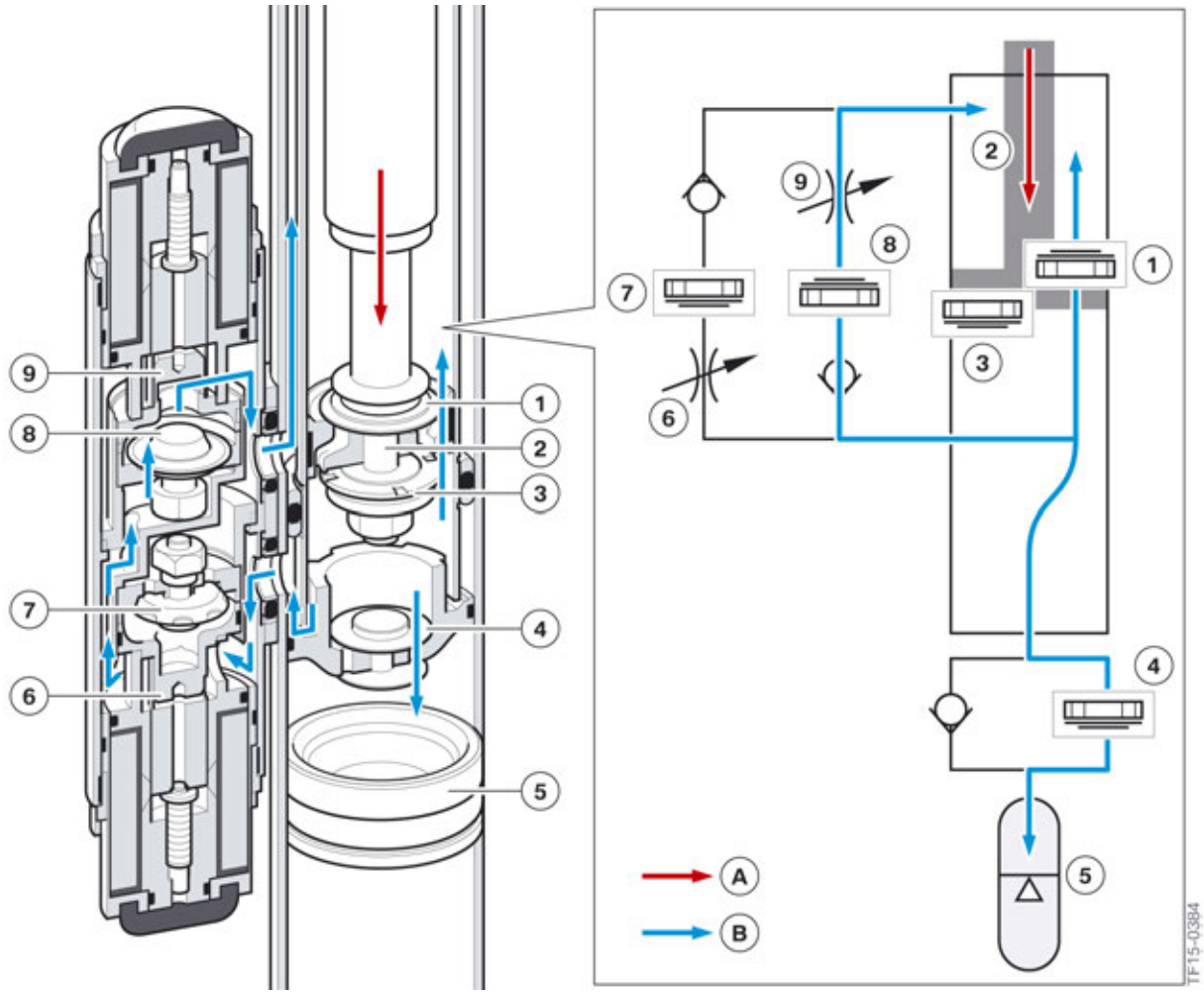

Control of compression stage on the shock absorber of the G12

Index	Explanation
A	Shock absorber movement
B	Oil flow
1	Main valve, compression stage
2	Working piston
3	Main valve, rebound stage
4	Bottom valve
5	Gas pressure chamber
6	Control valve, rebound stage
7	Comfort valve, rebound stage
8	Comfort valve, compression stage
9	Control valve, compression stage

When the piston rod is retracted, the oil volume displaced by the retracting piston is pressed through the bottom valve into the compensating reservoir and generates a damping force at the bottom valve in the process. The oil volume displaced by the working piston is pressed through the comfort and control valve of the compression stage and thus passes from the working chamber below the working piston into the working chamber above the piston. The restrictor cross-section in the control valve adjusts the damping force. The oil flow is forced through the main valve when the control valve is closed. The maximum possible damping force is then set.

Control of the rebound stage

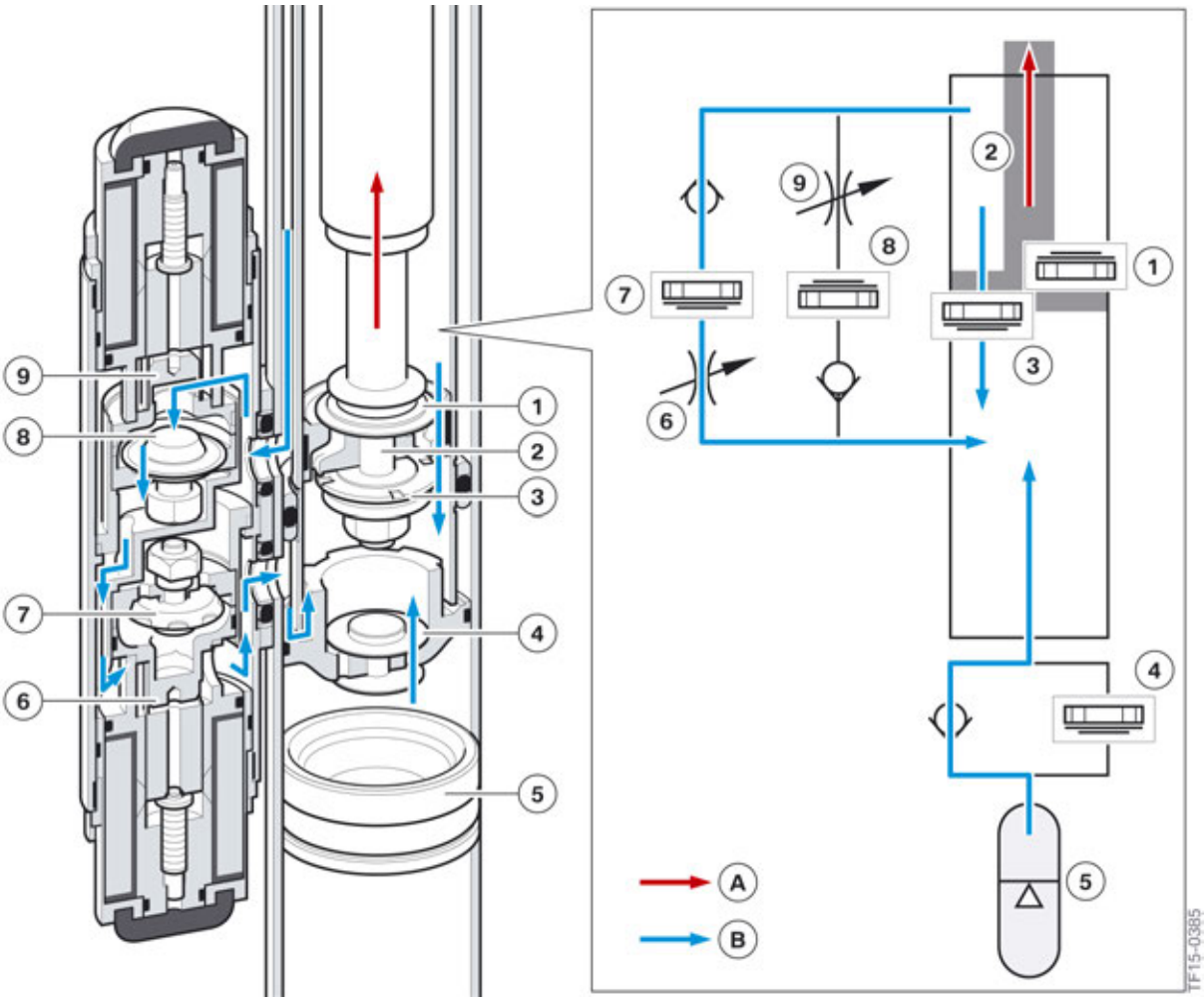

Control of rebound stage on the shock absorber of the G12

Index	Explanation
A	Shock absorber movement
B	Oil flow
1	Main valve, compression stage
2	Working piston
3	Main valve, rebound stage

Index	Explanation
4	Bottom valve
5	Gas pressure chamber
6	Control valve, rebound stage
7	Comfort valve, rebound stage
8	Comfort valve, compression stage
9	Control valve, compression stage

When the piston rod is extended, the gas pressure forces the necessary compensation volume out of the compensating chamber through the bottom valve into the working chamber below the working piston. The oil volume displaced by the working piston is pressed through the comfort and control valve of the rebound stage and thus passes from the working chamber above the working piston into the working chamber below the piston. The restrictor cross-section in the control valve adjusts the damping force. The oil is forced through the main valve of the rebound stage when the control valve is closed. The maximum possible damping force is then set.

6.4. Anti-roll bar

The following anti-roll bars are used on the G12 depending on the vehicle equipment:

- Standard equipment
  Conventional anti-roll bar on front and rear axles.
- Optional equipment (“Active Comfort Drive” SA 2VS)
  Electric active roll stabilization on front and rear axle EARSVV/EARSVH.

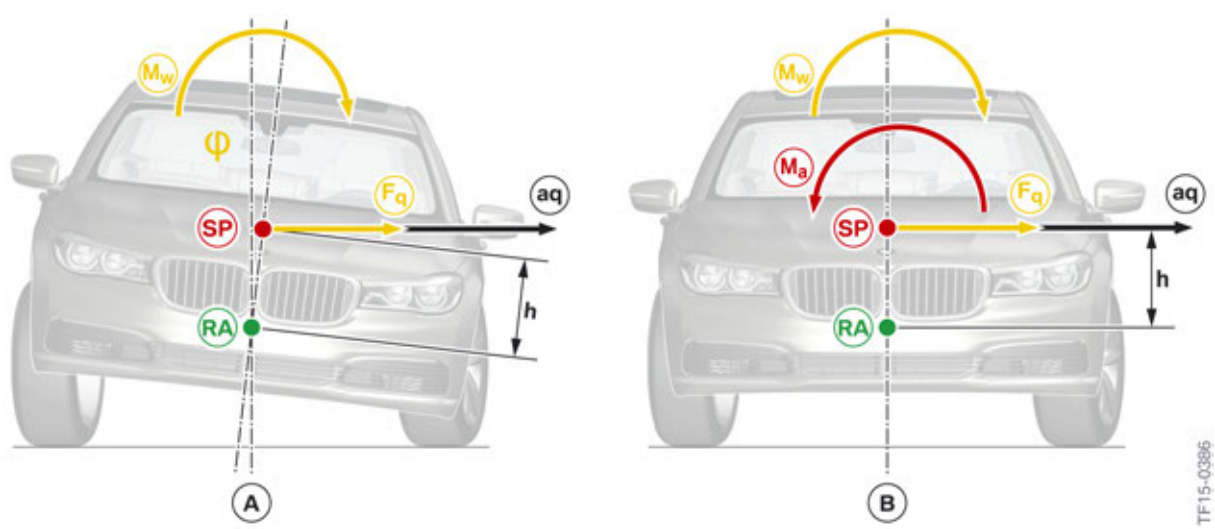

Comparison of conventional and active roll stabilization in stationary condition of the G12

Index	Explanation
A	Conventional passive roll stabilization
B	Active roll stabilization
aq	Lateral acceleration
Fq	Transverse force
h	Distance between roll axis and center of gravity (lever arm)
Ma	Moment of active stabilizer
Mw	Roll moment
RA	Roll axis
SP	center of gravity
φ	Roll angle

When cornering, the lateral acceleration (aq) acts at the vehicle center of gravity (SP). The body rolls about the roll axis (RA), which is defined by the kinematics of the front and rear axles. This results in the roll angle (φ).

On vehicles with the optional equipment “Active Comfort Drive” (SA 2VS), the roll moment (Mw) can be compensated solely by the active stabilizers up to a certain lateral acceleration. A roll angle (φ) builds up only when the roll moment (Mw) exceeds the counter-torque (Ma) set by the active stabilizer.

The following diagram shows a comparison of the different roll angles of both anti-roll bars as a function of the lateral acceleration.

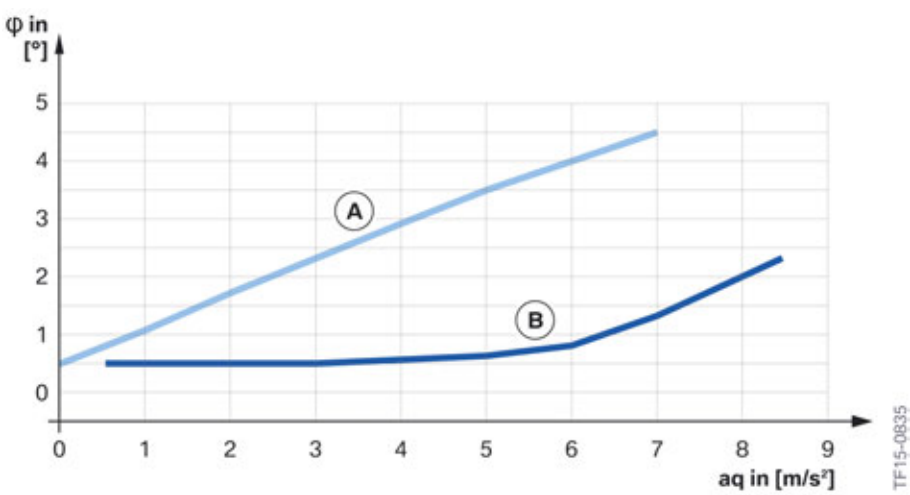

Roll angle diagram of the conventional anti-roll bar and active stabilizer

Index	Explanation
A	Conventional roll stabilization
B	Active roll stabilization
aq in [m/s²]	Lateral acceleration in metres per second squared
φ in [°]	Roll angle in angular degrees

6.5. Standard suspension

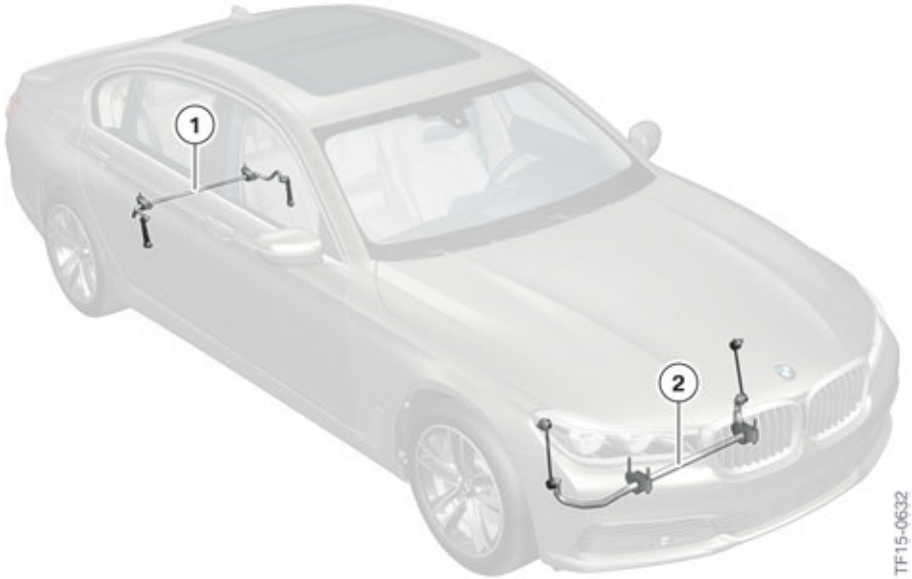

Conventional anti-roll bar in the G12

Index	Explanation
1	Rear axle anti-roll bar
2	Front axle anti-roll bar

As standard, conventional anti-roll bars on the front and rear axles reduce the roll tendency of the body during fast cornering or fast avoidance manoeuvres. However, there are also comfort losses in the case of one-sided road bumps due to the torsion spring characteristics of a conventional anti-roll bar. If a conventional anti-roll bar is excited by a pulse at a wheel on one side, this leads to spring oscillations of the anti-roll bar so that the wheel at the other end of the anti-roll bar also performs or "copies" these oscillations. Since the anti-roll bar is pivot-mounted on the body, the driver also feels the roll oscillations caused by this so-called "copying".

6.5.1. Chassis and suspension setup

Vehicle drivability when cornering can be greatly influenced by anti-roll bars on the front and rear axles. A decisive factor here is the roll moment ratio between the front and rear vehicle axles.
This ratio depends on the respective anti-roll bar moments of the two axles.

The following table provides an overview of the possible roll moment ratios and the resultant handling of the vehicle.

Anti-roll bar	Roll moment ratio	Understeer	Oversteer
Front axle soft/ rear axle hard	< 50 %		X
Front axle hard/ rear axle soft	> 50%	X	

The following graphic shows the percentage distribution of the anti-roll bar moments (roll moment ratio) of the front and rear axles when conventional anti-roll bars are used.

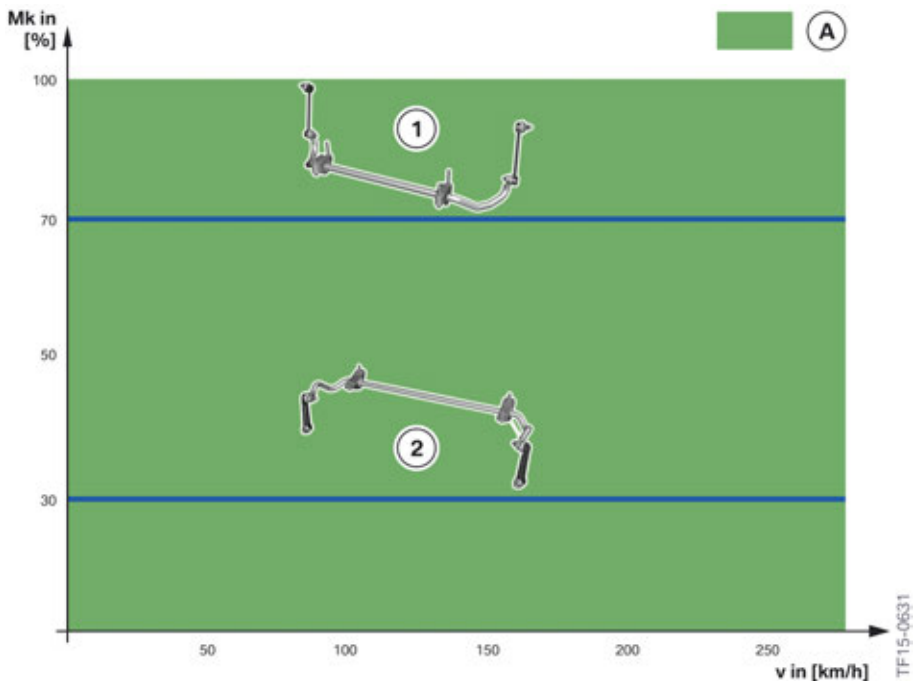

Percentage distribution of the anti-roll bar moments on a vehicle with conventional anti-roll bars

Index	Explanation
A	Understeering roll moment ratio
Mk in [%]	Moment distribution of conventional anti-roll bars in percent
v in [km/h]	Driving speed in kilometers per hour
1	Conventional anti-roll bar on the front axle
2	Conventional anti-roll bar on the rear axle

With a conventional anti-roll bar, the roll moment ratio is optimally adapted to the respective vehicle. It is aimed to achieve handling with slight understeer. For normal drivers, an oversteering vehicle is more difficult to control than an understeering vehicle.

6.6. Active Comfort Drive

The previously known optional equipment Adaptive Drive is replaced in the G12 by the enhanced suspension control system “Active Comfort Drive”.

The various driving dynamics control systems are networked together in the optional chassis and suspension package “Active Comfort Drive” in order to achieve perfect driving dynamics combined with high ride comfort. Information is read in from a large number of sensors by the Vertical Dynamics Platform (VDP) control unit and the corresponding control commands are output to the different actuators. The aim is to above all detect road bumps and obstacles ahead as early as possible and to derive appropriate counter-measures.

G12 Chassis and Suspension

6. Driving Stability Control

The following graphic provides an overview of the overall system.

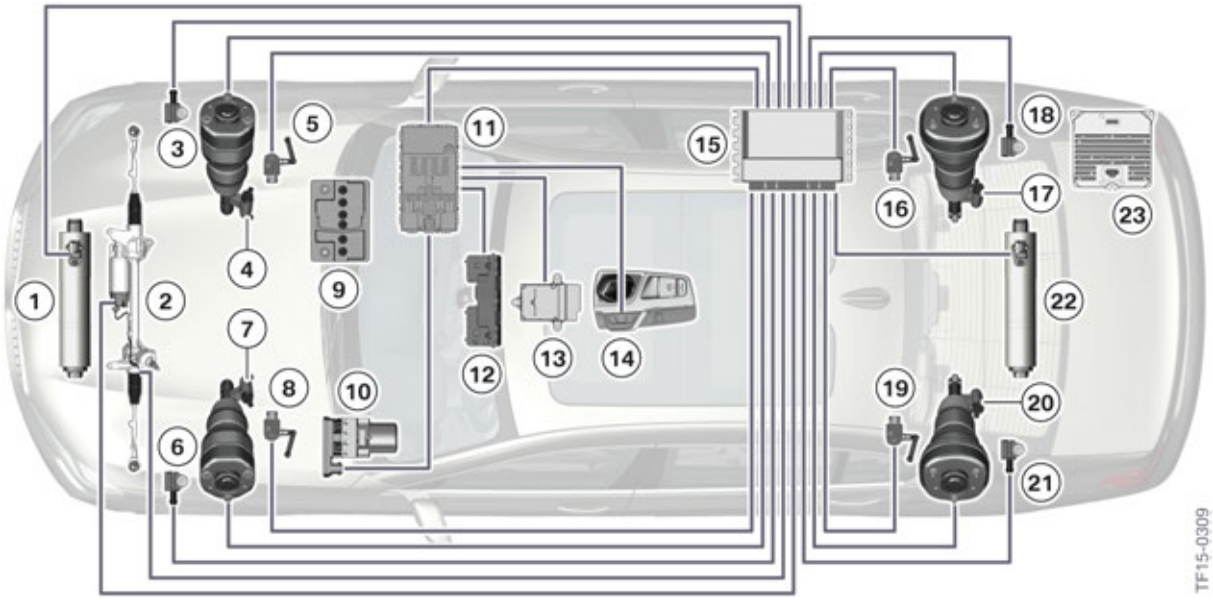

System overview of the optional chassis and suspension package “Active Comfort Drive” in the G12

Index	Explanation
1	Electric active roll stabilization front EARSVV (optional equipment “Active Comfort Drive” SA 2VS)
2	Electronic Power Steering (EPS)
3	Wheel acceleration sensor, front right (optional equipment “Active Comfort Drive” SA 2VS)
4	Control valves for shock absorber adjustment, front right
5	Ride height sensor, front right
6	Wheel acceleration sensor, front left (optional equipment “Active Comfort Drive” SA 2VS)
7	Control valves for shock absorber adjustment, front left
8	Ride height sensor, front left
9	12 V battery (optional equipment “Active Comfort Drive” SA 2VS)
10	Dynamic Stability Control (DSC)
11	Body Domain Controller (BDC)
12	Stereo camera (optional equipment “Active Comfort Drive” SA 2VS)
13	Advanced Crash Safety Module (ACSM-Low)
14	Driving experience switch
15	Vertical Dynamics Platform (VDP)
16	Ride height sensor, rear right
17	Control valves for shock absorber adjustment, rear right

Index	Explanation
18	Wheel acceleration sensor, rear right (optional equipment “Active Comfort Drive” SA 2VS)
19	Ride-height sensor, rear left
20	Control valves for shock absorber adjustment, rear left
21	Wheel acceleration sensor, rear left (optional equipment “Active Comfort Drive” SA 2VS)
22	Electric active roll stabilization rear (EARSVH) (optional equipment “Active Comfort Drive” SA 2VS)
23	Power Control Unit (PCU) (optional equipment “Active Comfort Drive” SA 2VS)

The optional chassis and suspension package “Active Comfort Drive” has the following additional components:

- Wheel acceleration sensors on all 4 wheel carriers
- Electric active stabilizers on the front and rear axles
- An additional 12 V battery as well as a DC/DC converter
- A stereo camera in the windscreen

Wheel acceleration sensors are used in the optional chassis and suspension package “Active Comfort Drive” for the following reasons:

- More precise disturbance variable control of the electric active stabilizers (EARSV) possible. Avoidance of so-called copying from one wheel to the other in the event of road bumps.
- Precise regulation of the Electronic Damper Control (EDC) is possible through detection of the wheel movement via the wheel acceleration sensors and the body movement via the ride height sensors.
  Processing of the two information sources allows use of a simplified control unit version of the Advanced Crash Safety Module (ACSM-Low).

6.6.1. Predictive control

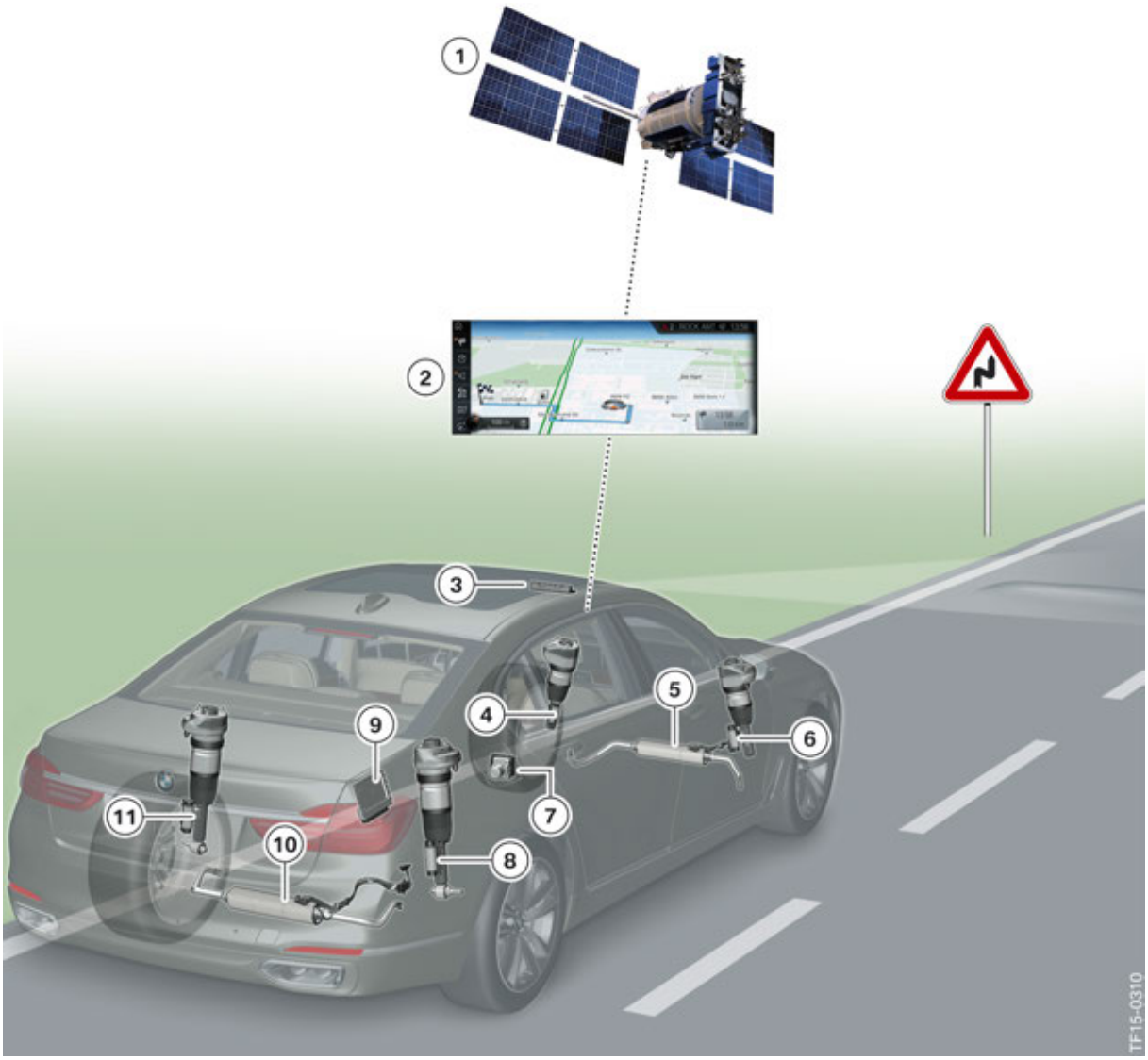

Predictive control of the optional chassis and suspension package “Active Comfort Drive” in the G12

Index	Explanation
1	Satellite
2	Navigation data
3	Stereo camera (KAFAS camera 3)
4	Controllable shock absorber, front left
5	Electric active roll stabilization front (EARSVV)
6	Controllable shock absorber, front right
7	Dynamic Stability Control (DSC)

Index	Explanation
8	Controllable shock absorber, rear right
9	Vertical Dynamics Platform (VDP) control unit
10	Electric active roll stabilization rear (EARSVH)
11	Controllable shock absorber, rear left

In order to prepare the chassis and suspension for the different road conditions as early as possible, the following data is read in from various control units and processed to allow predictive control:

- If ADAPTIVE driving mode has been activated via the driving experience switch, the Dynamic Stability Control unit processes the navigation data to analyses the route and influences the driving program to be activated if necessary. If the vehicle is approaching a sharp bend at high speed, for example, the Dynamic Stability Control (DSC) activates Sport mode without any action on the part of the driver. The Vertical Dynamics Platform (VDP) reads in this information and activates the corresponding chassis components for Sport mode. Conversely, an automatic change in driving program from Sport to Comfort is also possible. If the vehicle exits a winding section of road through which it has been driven at speed and then drives at constant speed on a straight section, this results in automatic changeover to the Comfort driving program. This means that the optimum driving mode with respect to comfort (Comfort) and driving dynamics (Sport) is automatically set without manual operation of the driving experience switch depending on the driving style and probable route. Route guidance need not be activated for this.
- The Vertical Dynamics Platform (VDP) reads in the information of the stereo camera in the windscreen independently of the selected driving mode and processes this.

In addition, a large quantity of additional information such as the driving style analysis is read in by the Vertical Dynamic Platform (VDP) control unit and used for predictive control of the standard Electronic Damper Control (EDC) as well as the electric active stabilizers (EARSV).

Obstacles can therefore be overcome predictively and with even more comfort. The driver is even less aware of bumps. The body of the vehicle does not have to move vertically to the same extent since the chassis and suspension react intelligently and predictively to road bumps.

The optional chassis and suspension package “Active Comfort Drive” therefore offers the following advantages:

- Reduced compression and rebound (EDC).
- Reduced pitch movement (EDC).
- Faster decay of vehicle body reverberations (EDC).
- High driving dynamics when cornering thanks to active roll stabilization (EARSV).
- High comfort for straight-ahead driving due to decoupling of anti-roll bar halves and thus avoidance of road bump "copying" (EARSV).

G12 Chassis and Suspension

6. Driving Stability Control

The functions of the chassis and suspension package "Active Comfort Drive" are available in different forms in the following positions of the driving experience switch.

Driving experience switch position	Electric active roll stabilization EARSV	Electronic Damper Control (EDC)
COMFORT PLUS	Balanced	Comfortable
Comfort/ECO PRO	Balanced	Balanced
Sport	Sporty	Sporty

As a result of intelligent networking of the systems, failure of one sensor system, e.g. the stereo camera due to poor visibility, can be sufficiently compensated by the other available sensors. The ride comfort and driving dynamics thus remain at a very high level under all conditions.

The graphic on the next page shows an input and output diagram of the various components for control of the optional chassis and suspension package “Active Comfort Drive” in the G12.

G12 Chassis and Suspension

6. Driving Stability Control

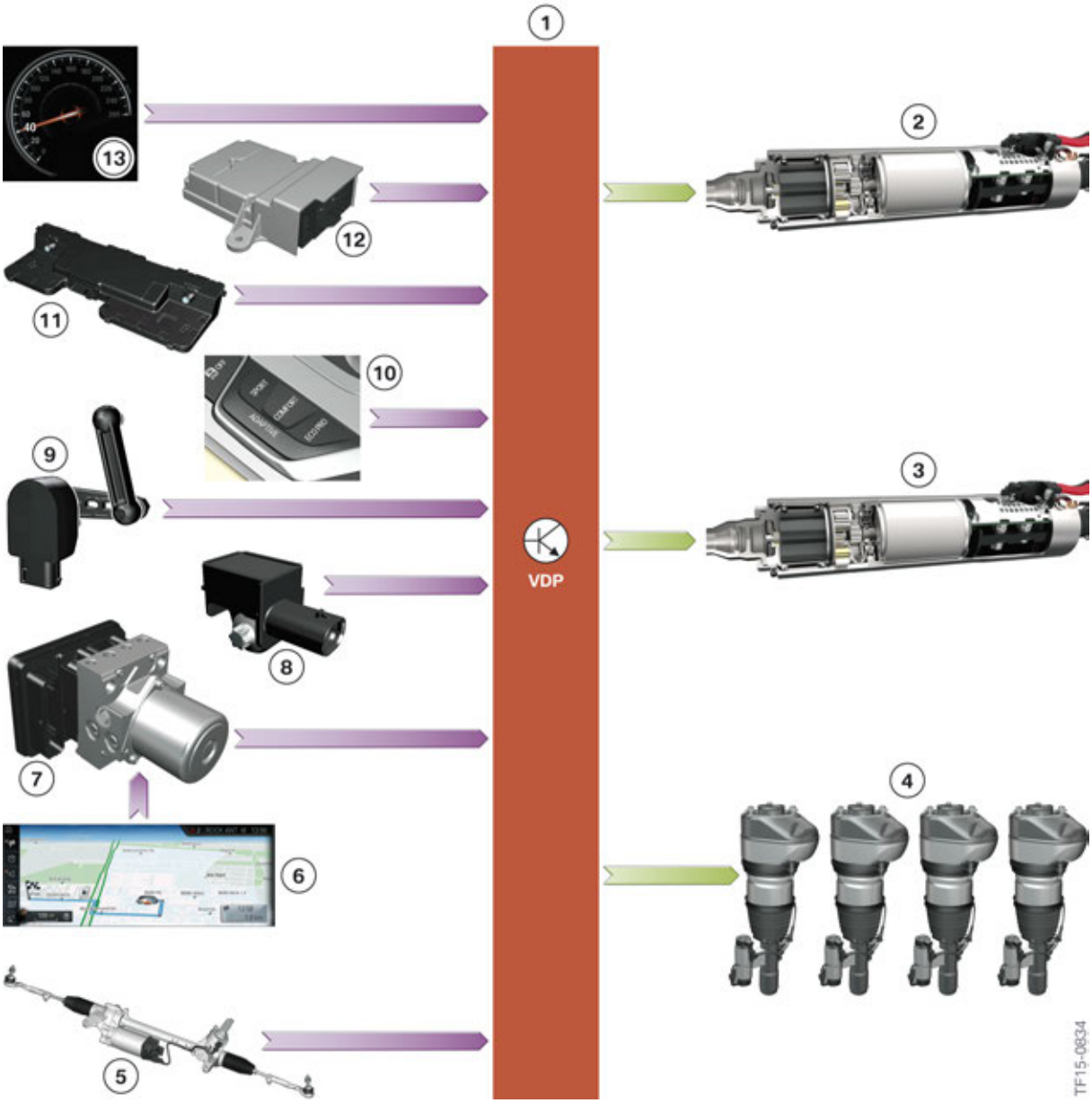

Input and output diagram of the optional chassis and suspension package “Active Comfort Drive” in the G12

Index	Explanation
1	Vertical Dynamics Platform (VDP)
2	Electric active roll stabilization front (EARSVV)
3	Electric active roll stabilization rear (EARSVH)
4	Electronic Damper Control (EDC) (4x)
5	Steering angle (EPS)
6	Navigation data
7	Wheel speeds (DSC)

Index	Explanation
8	Wheel accelerations
9	Ride heights
10	Driving mode
11	Road profile (stereo camera)
12	Lateral and longitudinal acceleration and yaw rate (ACSM-Low)
13	Vehicle speed

6.6.2. Electric active roll stabilization (EARSV)

As the first vehicle manufacturer worldwide, BMW uses electric active stabilizers instead of the previously used hydraulic active stabilizers. The electric active stabilizers in the optional equipment “Active Comfort Drive” (SA 2VS) reduce the roll tendency of the body in bends by targeted application of mechanical moments on the stabilizer halves by means of an electric motor.

The graphic on the next page shows a schematic system comparison between the active hydraulic stabilizer and the active electric stabilizer.

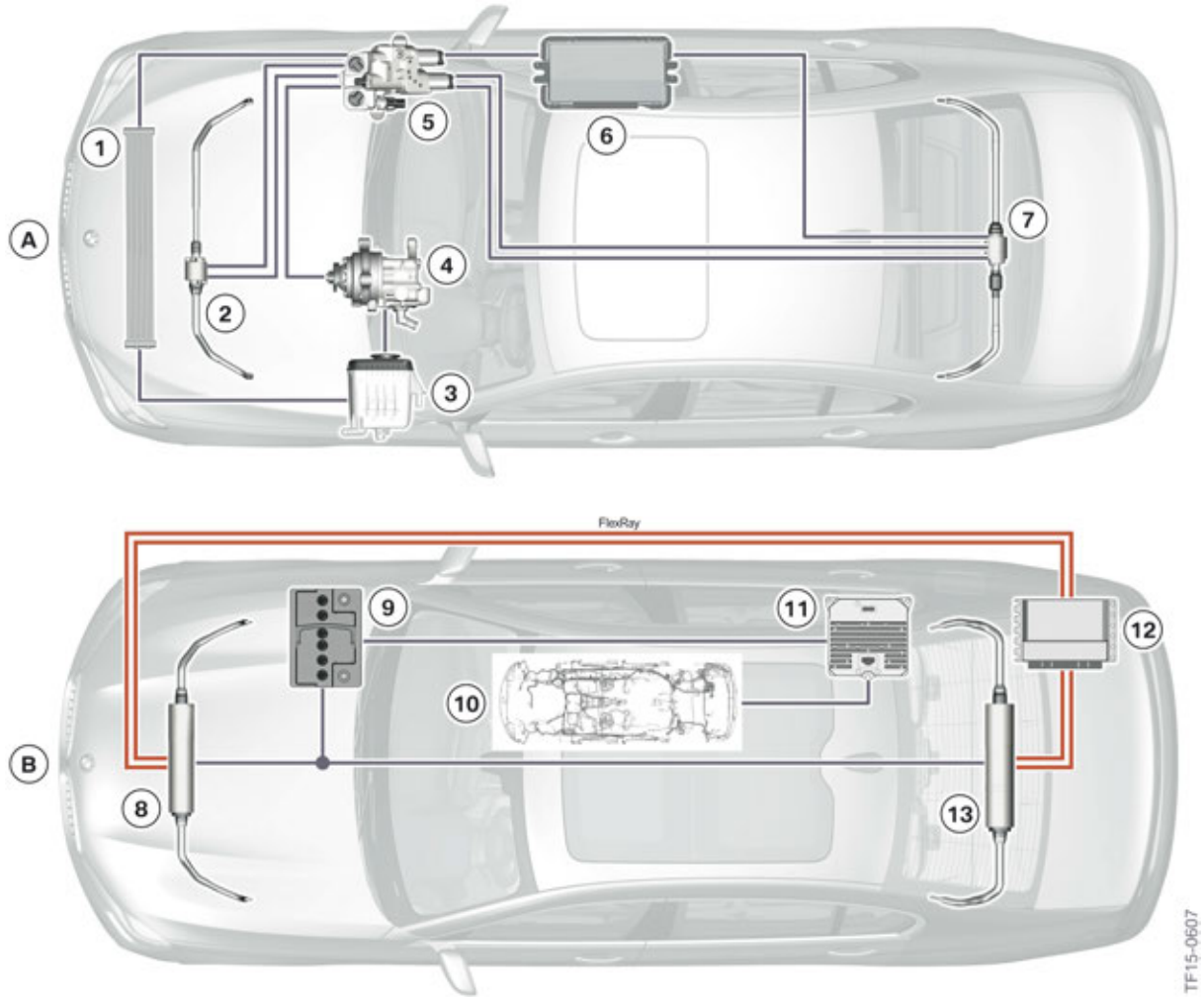

Schematic comparison of hydraulic active stabilizer and electric active stabilizer

Index	Explanation
A	Hydraulic active stabilizer ARS (F01/F02)
B	Electric active stabilizer EARSV (G12)
1	Engine oil cooler
2	Hydraulic active stabilizer front (ARS)
3	Expansion tank
4	Hydraulic pump
5	Valve block
6	Vertical Dynamics Management control unit (VDM)
7	Hydraulic active stabilizer rear (ARS)
8	Electric active roll stabilization front (EARSVV)
9	12 V battery (vehicle electrical system support)

Index	Explanation
10	Vehicle electrical system
11	Power Control Unit PCU (DC/DC converter 500 W)
12	Vertical Dynamics Platform (VDP) control unit
13	Electric active roll stabilization rear (EARSVH)

Electrification of the active stabilizer offers the following advantages:

- Simple integration in “full hybrid” drive systems
  Active roll stabilization is possible during purely electric driving.
- Simple decoupling of the stabilizer halves during straight-ahead driving
  Improved ride comfort due to prevention of road bump "copying"
- Increased efficiency
  Energy is required exclusively during the control actions and does not need to be kept permanently available like in a hydraulic system.
  Self-aligning forces which act on the electric motor in the stabilizer can be partially converted into electric current and fed back into the vehicle electrical system.

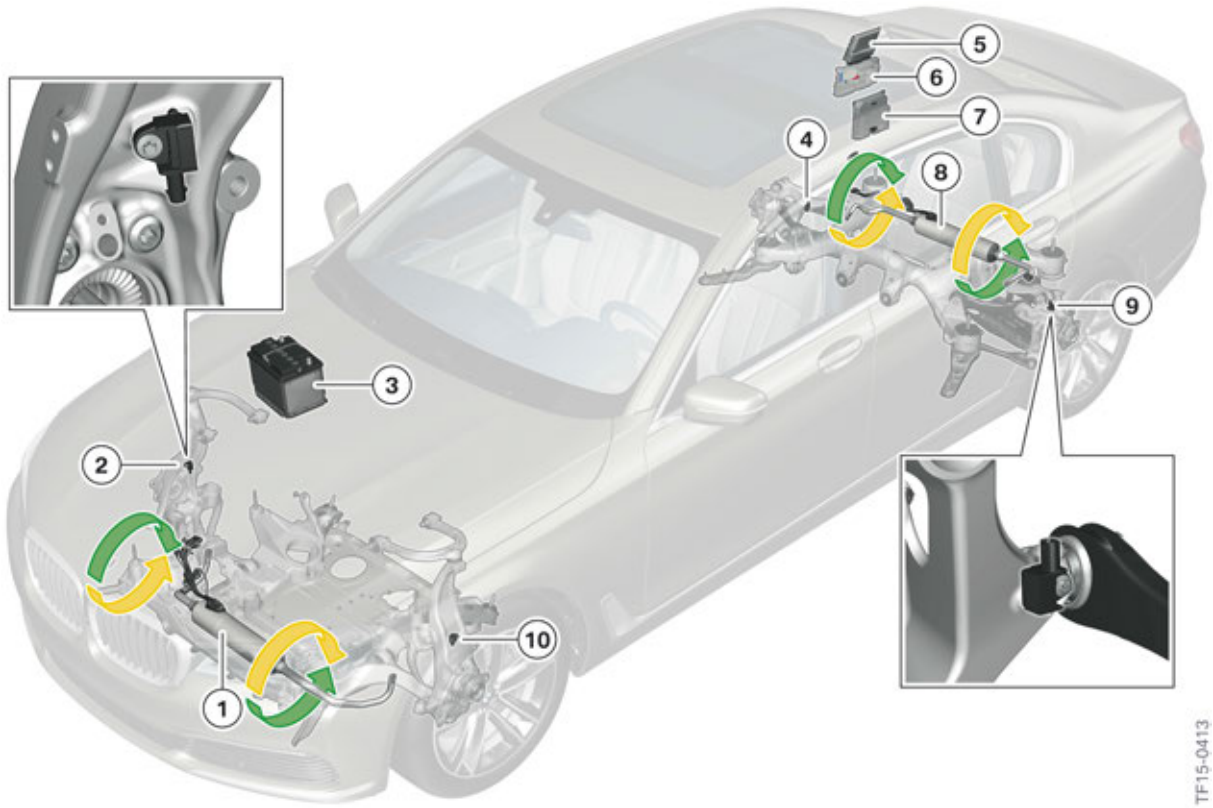

System overview of electric active roll stabilization EARSV

6. Driving Stability Control

Index	Explanation
1	Electric active roll stabilization front (EARSVV)
2	Wheel acceleration sensor, front right
3	12 V battery in engine compartment (vehicle electrical system support)
4	Wheel acceleration sensor, rear right
5	Vertical Dynamics Platform (VDP)
6	Rear right power distribution box
7	Power Control Unit (PCU) (DC/DC converter 500 W)
8	Electric active roll stabilization rear (EARSVH)
9	Wheel acceleration sensor, rear left
10	Wheel acceleration sensor, front left

A particular advantage which contributes above all to increasing ride comfort is the prevention of so-called "copying". When the vehicle is driving straight-ahead and drives over road bumps, electric active roll stabilization (EARSV) permits practically full decoupling of the left and right sides so that copy vibrations are almost excluded. The electric active stabilizers therefore compensate for the disadvantages of conventional anti-roll bars.

The following variables are mainly used for calculation of the required activation of the electric active stabilizers.

- Current lateral and longitudinal acceleration
- Vehicle speed
- Steering angle
- Wheel acceleration
- Ride heights

The incipient roll moment (Mw) is rapidly counteracted by fast processing of the data and activation of electric active roll stabilization (EARSV).

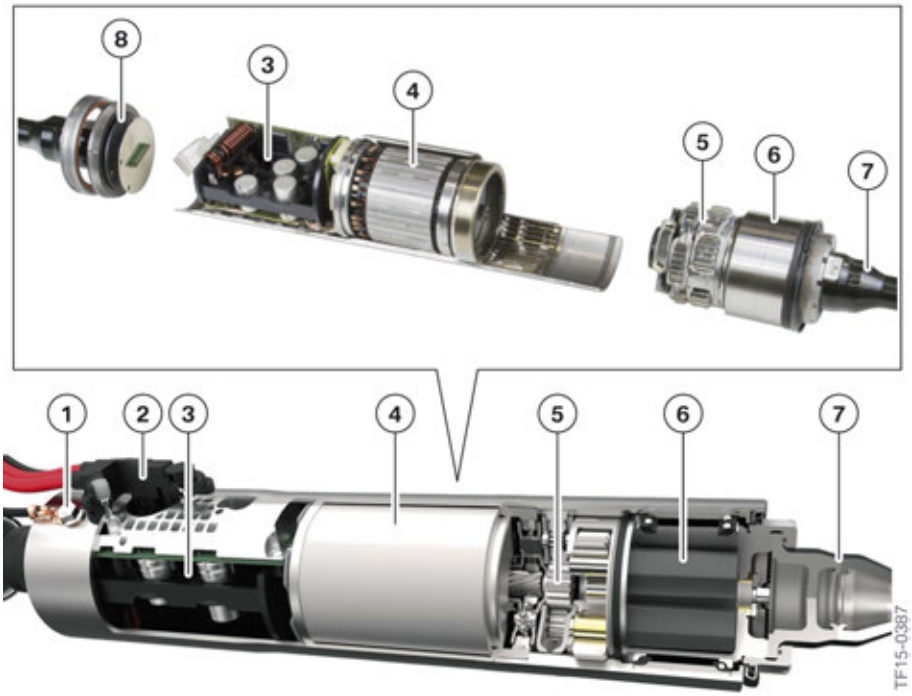

Sectional view of an electric active stabilizer in the G12

Index	Explanation
1	Ground connection
2	Electrical connection
3	Control unit (EARSVV/EARSVH)
4	Electric motor
5	Planetary gear (three-stage)
6	Decoupling element
7	Anti-roll bar link
8	Torque sensor

The active stabilizers receive the control request from the Vertical Dynamics Platform (VDP) control unit. The bus telegrams are read in and processed by the control units of the two active stabilizers (EARSVV/EARSVH). The two stabilizer halves are twisted with respect to each other by activation of the electric motor. Central energy conversion takes place in the permanently excited synchronous motor, whose direction of rotation, torque and speed are controlled via the set rotating field.

Power transmission takes place via the three-stage planetary gear, which converts the torque of the electric motor to the required stabilizer output torsion torque with a ratio of 1:158. A maximum stabilizer torsion torque of 750 Nm is currently implemented in the G12. The system is designed for significantly higher torsion torques in order to also permit compensation of superposition effects due to road bumps.

The elastomer decoupling element between the planetary gear and stabilizer torsion spring has the task of decoupling highly dynamic, low-amplitude excitations from the road. This thus makes a further contribution to meeting the high comfort goals.

A torque sensor inside the component provides feedback on the current control torques to the control unit. A plausibility check of the data allows various faults to be detected and then stored in the form of a fault code entry. However, repair of the component is not possible. The active electric stabilizer must be replaced as a complete unit in the event of a mechanical component defect.

Since the electric active stabilizer will be available in other vehicle models in future, the control unit must be taught for the respective vehicle by means of version encoding after installation. This ensures that the electric active stabilizer provides the correct control torques for the vehicle in question.

Technical data

The following table provides an overview of the technical data of the electric active stabilizer.

Electric active roll stabilization EARSV	Technical data
Weight	14 kg / 30 lbs
Maximum control unit temperature	120 °C / 248 °F
Maximum electric motor temperature	160 °C / 320 °F
Maximum electric motor torque	7.5Nm / 5.5 ft-lbs
Maximum stabilizer torque	750Nm / 553 ft-lbs
Maximum current consumption	120 A
Maximum current output	- 100 A

The values for maximum current consumption and maximum current output are the values that are possible for short-time operation.

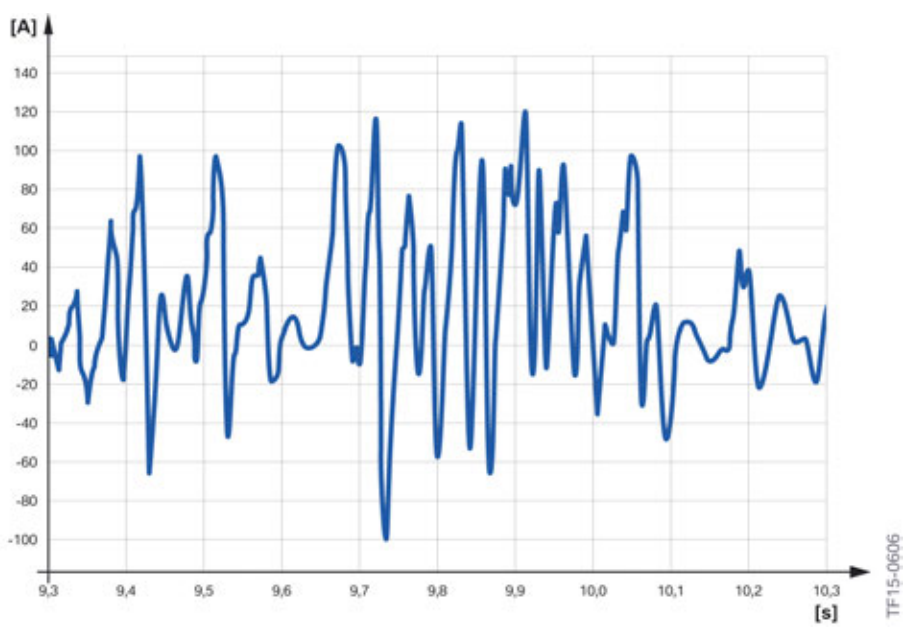

Current consumption and current output of the electric active stabilizer in the G12

The above graphic shows the current consumption and output of the electric active stabilizer for a driving manoeuvre with approximately 30 % energy recovery. It must be noted that this diagram is just a snapshot representation. Depending on the driving manoeuvre, the activation power and energy recovery of the electric active stabilizer may differ considerably.

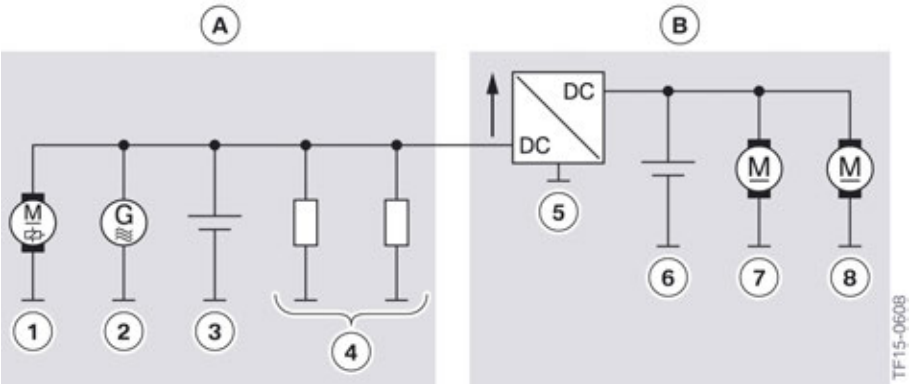

Function diagram of the DC/DC converter in the G12

Index	Explanation
A	12 V vehicle electrical system
B	Consumes of electric active stabilizers
1	Starter motor
2	Alternator
3	12 V battery
4	Consumers of the 12 V vehicle electrical system
5	Power Control Unit (PCU) (DC/DC converter 500 W)
6	12 V battery in engine compartment (vehicle electrical system support)
7	Electric active roll stabilization front (EARSVV)
8	Electric active roll stabilization rear (EARSVH)

In order to ensure that the consumers of the 12 V vehicle electrical system in the G12 are not influenced by the high load currents of the two electric active stabilizers, the stabilizers have been isolated from the basis vehicle electrical system by means of a DC/DC converter (500 W).

The required energy for activation is provided by an additional 12 V battery located in the engine compartment. This means that other consumers are not affected by the high energy consumption.

The battery is an auxiliary batter which supplies the vehicle electrical system with power depending on the vehicle equipment. For this reason, the battery may also be present even if the vehicle is not equipped with electric active stabilizers.

6.6.3. Control strategy

Vehicle drivability when cornering can be greatly influenced by anti-roll bars on the front and rear axles. A decisive factor here is the roll moment ratio between the front and rear vehicle axles. This ratio depends on the respective anti-roll bar moments of the two axles.

The following table provides an overview of the possible roll moment ratios and the resultant handling of the vehicle.

Anti-roll bar	Roll moment ratio	Understeer	Oversteer
Front axle soft/ rear axle hard	< 50 %		X
Front axle hard/ rear axle soft	> 50%	X	

The following graphic shows the percentage distribution of the stabilizer moments (roll moment ratio) of the active stabilizers on the two vehicle axles.

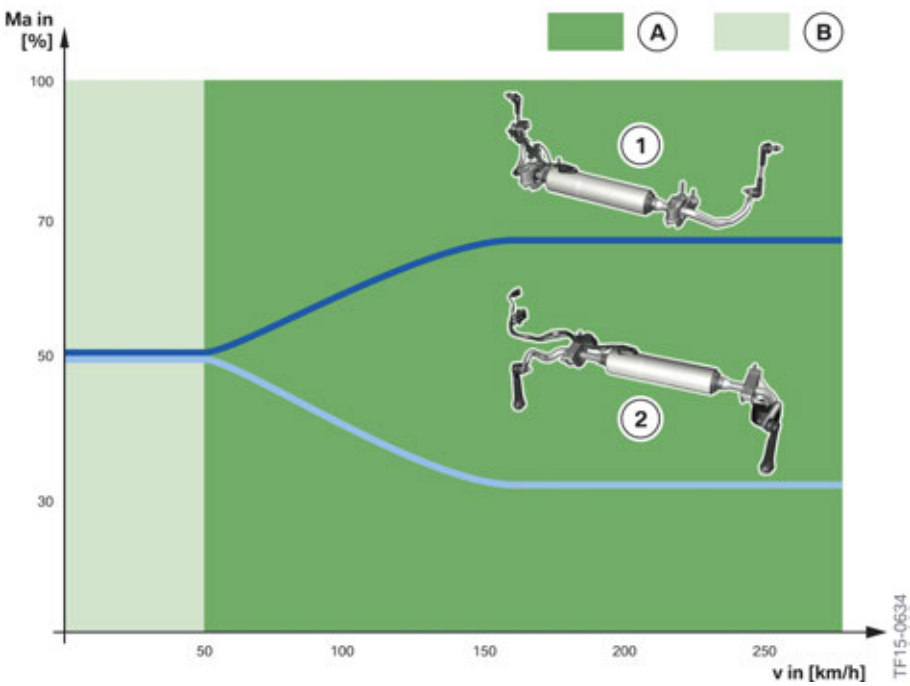

Characteristic curve of active stabilizer on front and rear axles

Index	Explanation
A	Understeering roll moment ratio
B	Neutral roll moment ratio
Ma in [%]	Moment distribution of active stabilizers in percent
v in [km/h]	Driving speed in kilometers per hour
1	Active stabilizer on the front axle
2	Active stabilizer on the rear axle

The active stabilizer allows the roll movement ratio to be adapted to the respective driving situation in order to increase the driving dynamics. The roll movement ratio is 50 : 50 (neutral) in the lower speed range (0 ~ 50 km/h). The roll movement ratio is adjusted towards understeer with increasing speed.

Application of roll movement via the active stabilizer influences the cornering forces that can be transferred by the tires.

The following graphic shows the maximum cornering forces that can be transferred when cornering as a function of the applied stabilizer moments.

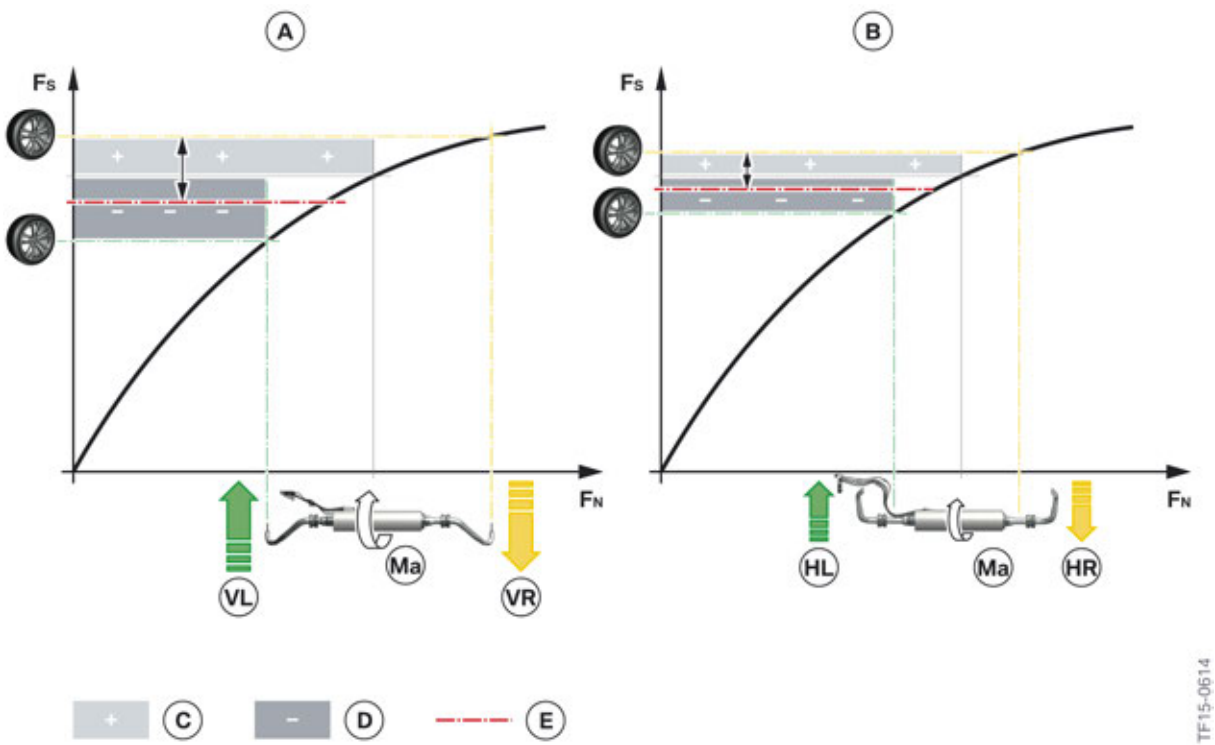

Diagram of a positive roll moment ratio through control via 2 active stabilizers

Index	Explanation
A	Large movement of the active stabilizer on the front axle
B	Low movement of the active stabilizer on the rear axle
C	Increase in transferable cornering force at the wheel
D	Reduction in transferable cornering force at the wheel
E	Resultant transferable cornering force at the wheels of an axle
FS	Transferable cornering force at the wheel
FN	Vertical wheel force
HL	Force of active stabilizer at rear left wheel

Index	Explanation
HR	Force of active stabilizer at rear right wheel
Ma	Active stabilizer movement
VL	Force of active stabilizer at front left wheel
VR	Force of active stabilizer at front right wheel

When cornering, a counter-torque (Ma) is applied by the active stabilizers to counteract the acting roll movement (Mw). The movement (Ma) applied depending on the action of the active stabilizers either increase or reduce the tire contact forces of the different wheels.

If a wheel is loaded with a particularly high force by the active stabilizer, its transferable cornering force increases due to the higher tire contact force. In contrast, the load on the opposite wheel is relieved, and its cornering force is thus reduced due to the lower tire contact force. The resultant tire contact forces characterise the transferable cornering forces of the wheels on an axle.

Since the reduction in the transferable cornering forces of the relieved wheel is proportionately higher than the increase in the transferable cornering forces of the loaded wheel as a result of increasing active stabilizer force, this means that there is a reduction in the resultant cornering force of the wheels on this axle.

In the direct comparison of the two axles in the above diagram, it can be seen that the rear axle can transfer a higher resultant transferable cornering force than the front axle. In the limit range, the vehicle would therefore push over the front wheels, i.e. understeer.

It is easier for an inexperienced driver to regain control over the vehicle again in this situation than if the vehicle were to oversteer (vehicle skids at the rear axle).

6.6.4. System wiring diagram of electric active roll stabilization EARSV

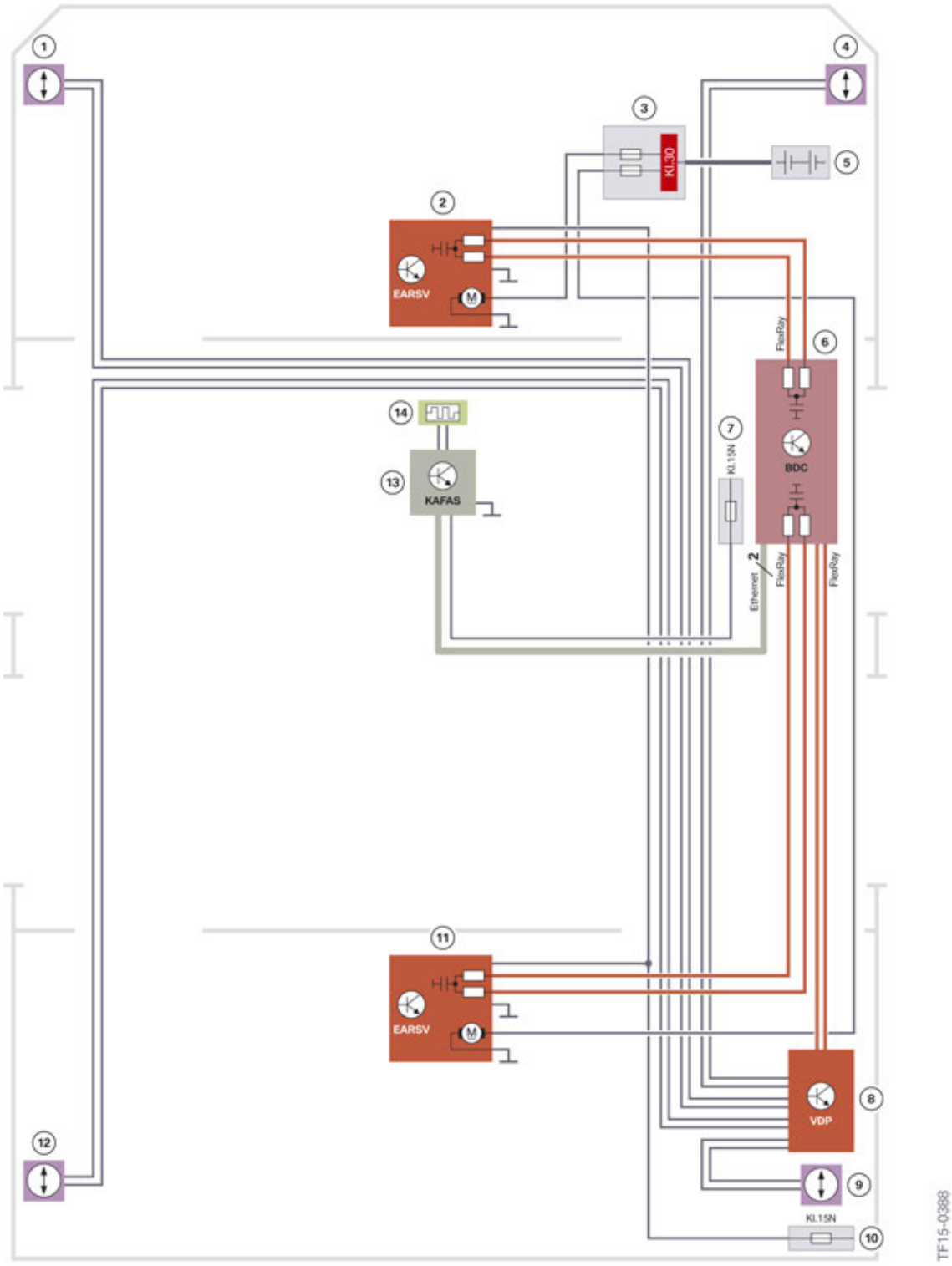

System wiring diagram of electric active roll stabilization EARSV in the G12

G12 Chassis and Suspension

6. Driving Stability Control

Index	Explanation
1	Wheel acceleration sensor, front left
2	Electric active roll stabilization front (EARSVV)
3	Power distribution box, engine compartment
4	Wheel acceleration sensor, front right
5	12 V battery in engine compartment (vehicle electrical system support)
6	Body Domain Controller (BDC)
7	Power distribution box, front right
8	Vertical Dynamics Platform (VDP)
9	Wheel acceleration sensor, rear right
10	Rear right power distribution box
11	Electric active roll stabilization rear (EARSVH)
12	Wheel acceleration sensor, rear left
13	KAFAS camera control unit
14	Stereo camera

Bayerische Motorenwerke Aktiengesellschaft
Qualifizierung und Training
Röntgenstraße 7
85716 Unterschleißheim, Germany

Technical training.
Product information.

G12 General Vehicle Electronics

Edited for the U.S. market by:
BMW Group University
Technical Training
ST1501 10/1/2015

BMW Service

General information

Symbols used

The following symbol is used in this document to facilitate better comprehension or to draw attention to very important information:

⚠

Contains important safety information and information that needs to be observed strictly in order to guarantee the smooth operation of the system.

Information status and national-market versions

BMW Group vehicles meet the requirements of the highest safety and quality standards. Changes in requirements for environmental protection, customer benefits and design render necessary continuous development of systems and components. Consequently, there may be discrepancies between the contents of this document and the vehicles available in the training course.

This document basically relates to the European version of left hand drive vehicles. Some operating elements or components are arranged differently in right-hand drive vehicles than shown in the graphics in this document. Further differences may arise as the result of the equipment specification in specific markets or countries.

Additional sources of information

Further information on the individual topics can be found in the following:

- Owner's Handbook
- Integrated Service Technical Application.

Contact: conceptinfo@bmw.de

©2015 BMW AG, Munich

Reprints of this publication or its parts require the written approval of BMW AG, Munich

The information contained in this document forms an integral part of the technical training of the BMW Group and is intended for the trainer and participants in the seminar. Refer to the latest relevant information systems of the BMW Group for any changes/additions to the technical data.

Information status: **June 2015**
BV-72/Technical Training

G12 General Vehicle Electronics

Contents

1. Exterior Lights **1**
- 1.1. System wiring diagram 2
- 1.2. Lighting, front 5
  - 1.2.1. Adaptive LED Headlight 6
  - 1.2.2. Icon Adaptive LED Headlight 7
- 1.3. Lighting, rear 8
- 1.4. High-beam assistant 9
  - 1.4.1. System wiring diagram 10
- 1.5. Exterior light staging 10
  - 1.5.1. System wiring diagram 11
  - 1.5.2. Ground lights 12
  - 1.5.3. Light carpet 13

2. Interior Lights **14**
- 2.1. Basic 14
  - 2.1.1. System wiring diagram 14
- 2.2. Ambient lighting 16
  - 2.2.1. System wiring diagram 17
- 2.3. Light Effect Manager 19
  - 2.3.1. System wiring diagram 20
  - 2.3.2. System components 22

3. Washer/wiper System **25**
- 3.1. System wiring diagram 25

4. Locking and Security Functions **27**
- 4.1. Comfort Access 27
  - 4.1.1. System wiring diagram 27
- 4.2. Central locking system 29
  - 4.2.1. System wiring diagram 29
  - 4.2.2. Function 30
- 4.3. Automatic operation of tailgate 31
  - 4.3.1. System wiring diagram 31
- 4.4. Automatic Soft Close system 33
  - 4.4.1. System wiring diagram 33

5. Alarm System **35**
- 5.1. System wiring diagram 35

6. Power Window Regulator **37**
- 6.1. System wiring diagram 37

G12 General Vehicle Electronics

Contents

7. Slide/Tilt Sunroof **39**
7.1. System wiring diagram 39

8. Roller Sunblind **41**
8.1. System wiring diagram 41

9. Steering Column Switch Cluster **43**
9.1. System wiring diagram 43

10. Steering Column Adjustment **45**
10.1. System wiring diagram 45

11. Exterior Mirrors **47**
11.1. Exterior mirror, basic version 47
11.1.1. System wiring diagram 47
11.2. Exterior mirror High 49
11.2.1. System wiring diagram 49

12. Inside Mirror **51**
12.1. System wiring diagram 51

13. Seats **52**
13.1. Front seats 52
13.1.1. Memory seat, front, driver's side 52
13.1.2. Memory seat, front, passenger's side 54
13.1.3. Multifunction seat, front, driver's side 56
13.1.4. Multifunction seat, front, passenger's side 58
13.2. Rear seats 60
13.2.1. Seat heating, basic seat, rear passenger compartment 60
13.2.2. Comfort seat, rear passenger compartment, driver's side 62
13.2.3. Comfort seat, rear passenger compartment, passenger's side 64
13.3. Captain's Chair 65
13.4. Massage 68
13.4.1. Seat massage, both front seats 69
13.4.2. Seat massage, rear passenger compartment, and massage, front 71
13.5. Heated armrests 72
13.5.1. System wiring diagram 73
13.6. BMW Vitality Program 74

14. Horn **75**
14.1. System wiring diagram 75

G12 General Vehicle Electronics

1. Exterior Lights

The following exterior light versions are offered in the G12:

- Adaptive LED Headlights (SA ZAL)
- Icon Adaptive LED headlights (SA 552)

G12 General Vehicle Electronics

1. Exterior Lights

1.1. System wiring diagram

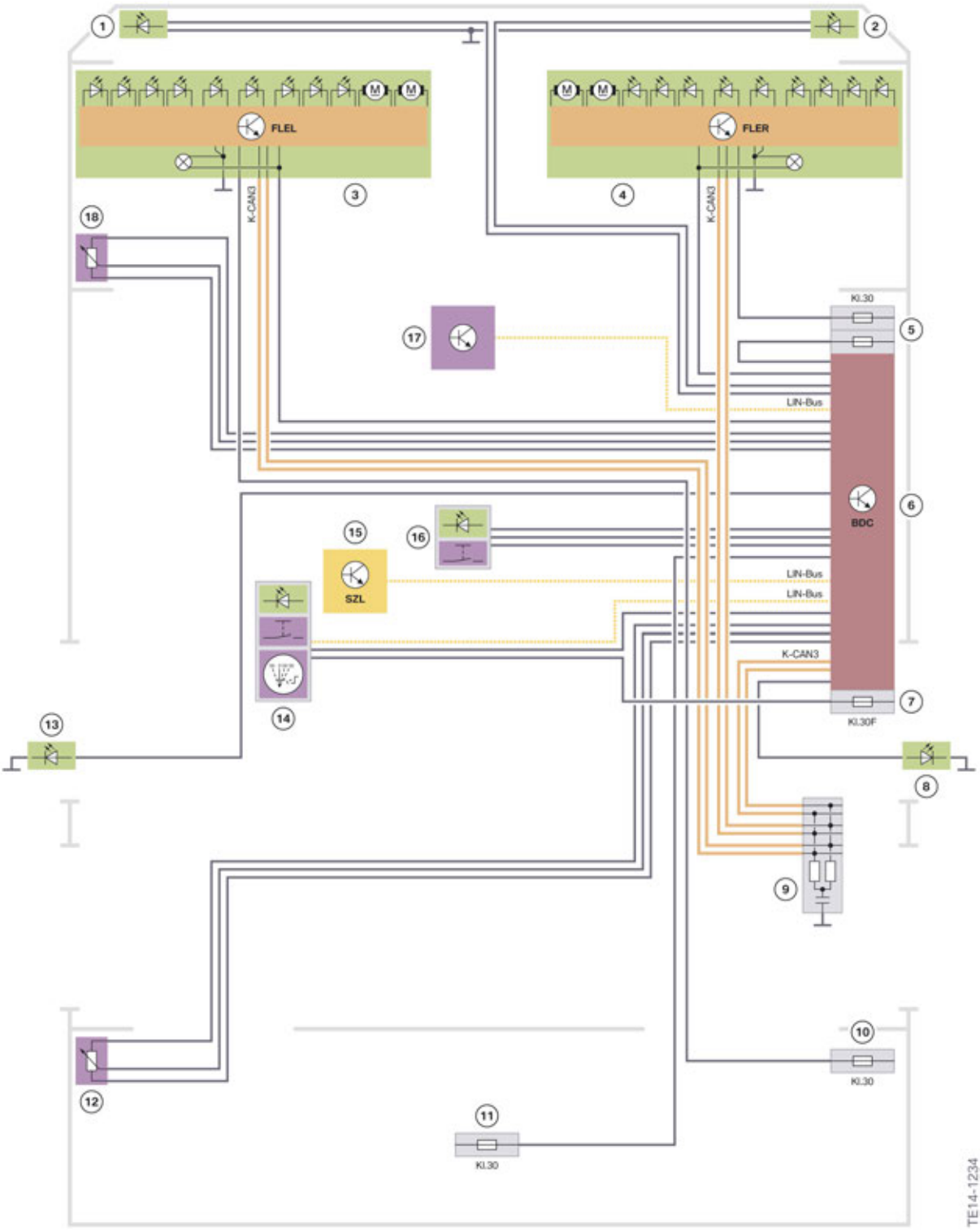

Front exterior lights

G12 General Vehicle Electronics

1. Exterior Lights

Index	Explanation
1	Left fog light
2	Right fog light
3	Left headlight with Front Light Electronics Left (FLEL)
4	Right headlight with Front Light Electronics Right (FLER)
5	Fuses in the power distribution box, front right
6	Body Domain Controller (BDC)
7	Fuse in the Body Domain Controller
8	Turn indicator in exterior mirror, right
9	CAN terminator
10	Fuse in the power distribution box, rear right
11	Fuse in the power distribution box, battery
12	Ride-height sensor, rear left
13	Turn indicator in exterior mirror, left
14	Light switch
15	Steering column switch cluster (SZL)
16	Hazard warning switch/Intelligent Safety button
17	Rain-light-solar-condensation sensor (RLSBS)
18	Ride height sensor, front left

G12 General Vehicle Electronics

1. Exterior Lights

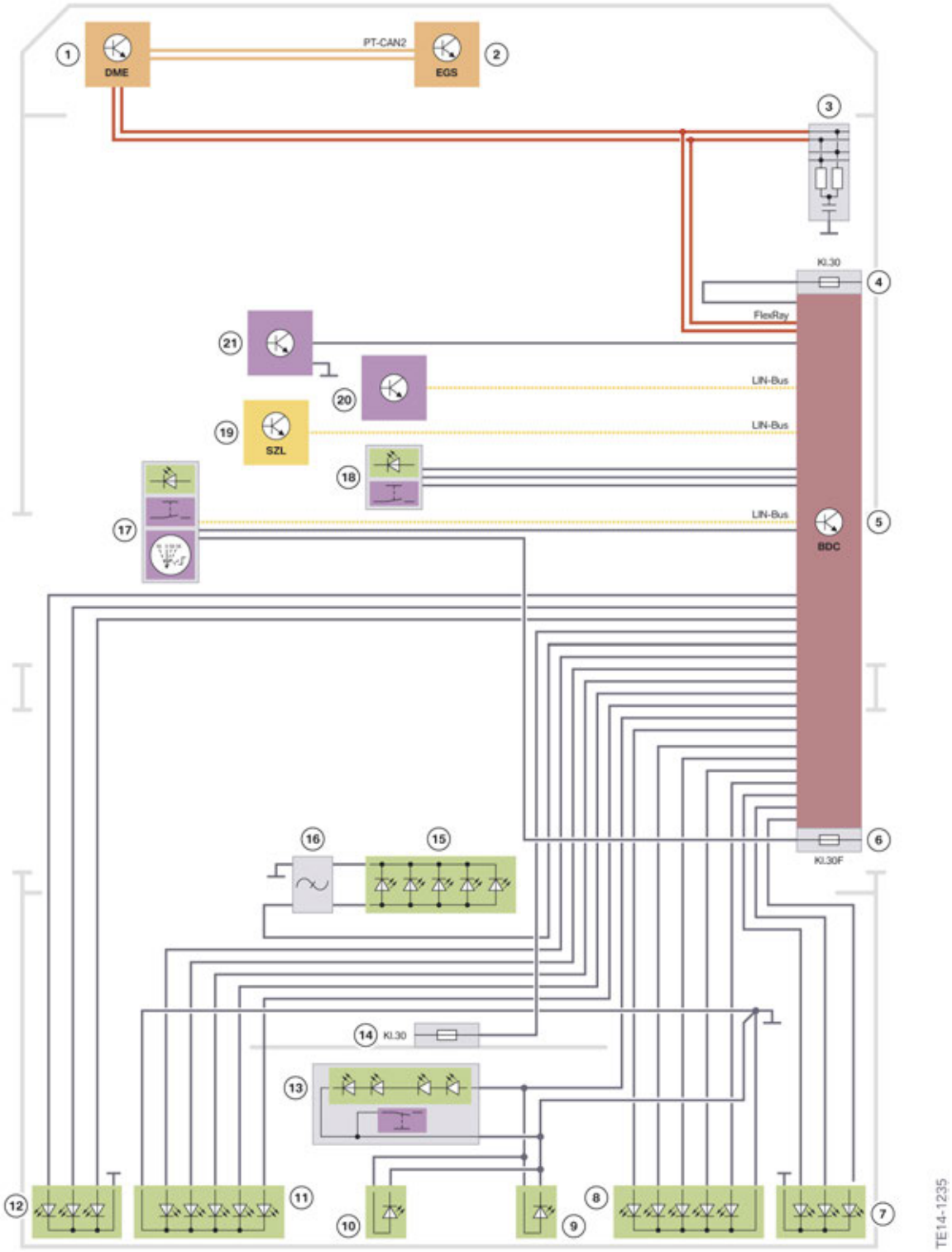

Rear exterior lights

G12 General Vehicle Electronics

1. Exterior Lights

Index	Explanation
1	Digital Motor Electronics (DME)
2	Electronic transmission control (EGS)
3	CAN terminator
4	Fuses in the power distribution box, front right
5	Body Domain Controller (BDC)
6	Fuse in the Body Domain Controller
7	Rear light cluster, right outer
8	Rear light cluster, right inner
9	License plate light, right
10	License plate light, left
11	Rear light cluster, left inner
12	Rear light cluster, left outer
13	License plate light strip with button for tailgate
14	Fuse in the power distribution box, battery
15	Additional brake light
16	Interference suppression filter
17	Light switch
18	Hazard warning switch/Intelligent Safety button
19	Steering column switch cluster (SZL)
20	Rain-light-solar-condensation sensor (RLSBS)
21	Brake light switch

1.2. Lighting, front

Headlight versions for G12:

Headlight versions

Index	Explanation
1	Adaptive LED Headlight
2	Icon Adaptive LED Headlight

G12 General Vehicle Electronics

1. Exterior Lights

1.2.1. Adaptive LED Headlight

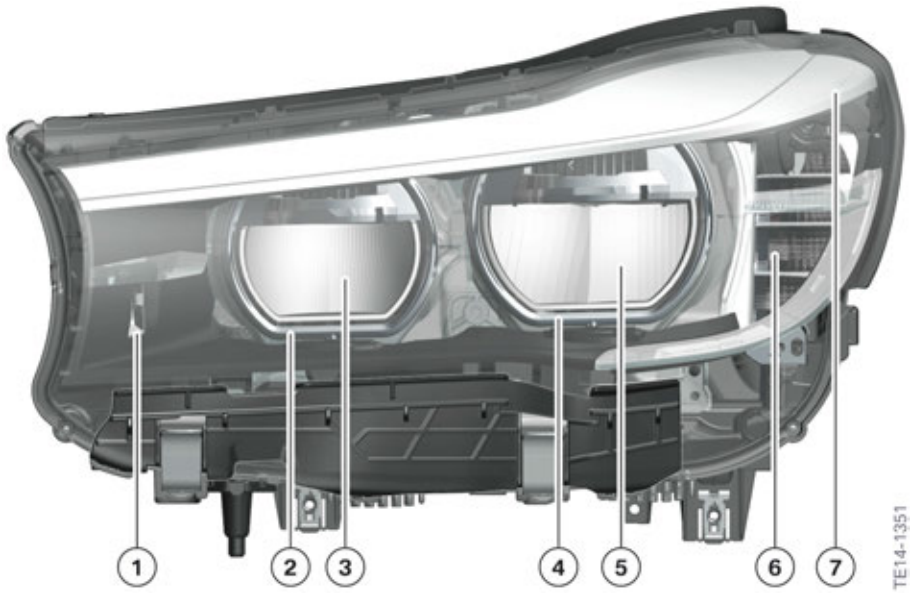

Basic LED headlights

Index	Explanation
1	Cornering light
2	Side lights and daytime running lights
3	Low-beam headlight/High-beam headlight
4	Side lights and daytime running lights
5	Low-beam headlight/High-beam headlight
6	Turn indicator
7	Side marker light

On the Adaptive LED headlight, the low-beam headlight and high beam are located in the same reflector.

G12 General Vehicle Electronics

1. Exterior Lights

1.2.2. Icon Adaptive LED Headlight

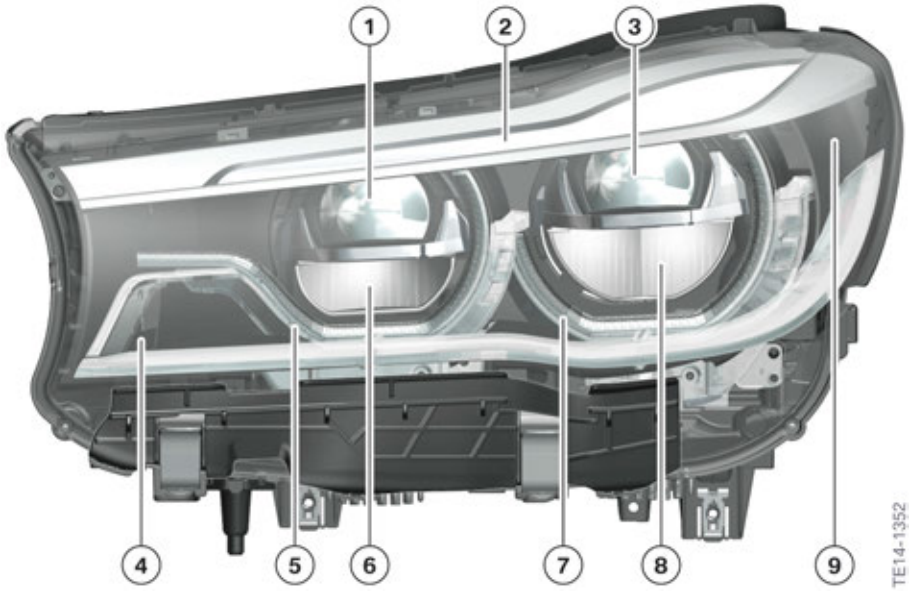

Adaptive Full LED Headlight

Index	Explanation
1	Low-beam headlight
2	Turn indicator
3	Low-beam headlight
4	Cornering lights
5	Side light, daytime running lights
6	High-beam headlight
7	Side light, daytime running lights
8	High-beam headlight
9	Side marker light

On the Icon Adaptive LED Headlight, the low beams have there own projector lenses and are separate from the high beam.

G12 General Vehicle Electronics

1. Exterior Lights

1.3. Lighting, rear

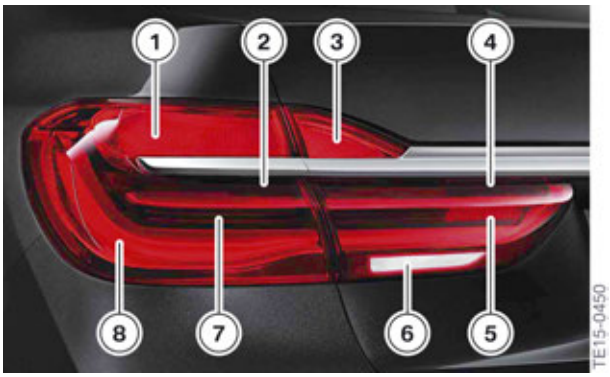

Taillight

Index	Explanation
1	Turn indicator
2	Taillight
3	Turn indicator
4	Rear fog light (Not for US)
5	Rear fog light (Not for US)
6	Reversing light
7	Brake light
8	Taillight

G12 General Vehicle Electronics

1. Exterior Lights

1.4. High-beam assistant

On vehicles with camera-based driver assistance systems (KAFAS), the function of the high-beam assistant is performed by KAFAS.

On vehicles without camera-based driver assistance systems (KAFAS), the high-beam assistant is integrated in the interior mirror.

High-beam assistant (FLA)

G12 General Vehicle Electronics

1. Exterior Lights

1.4.1. System wiring diagram

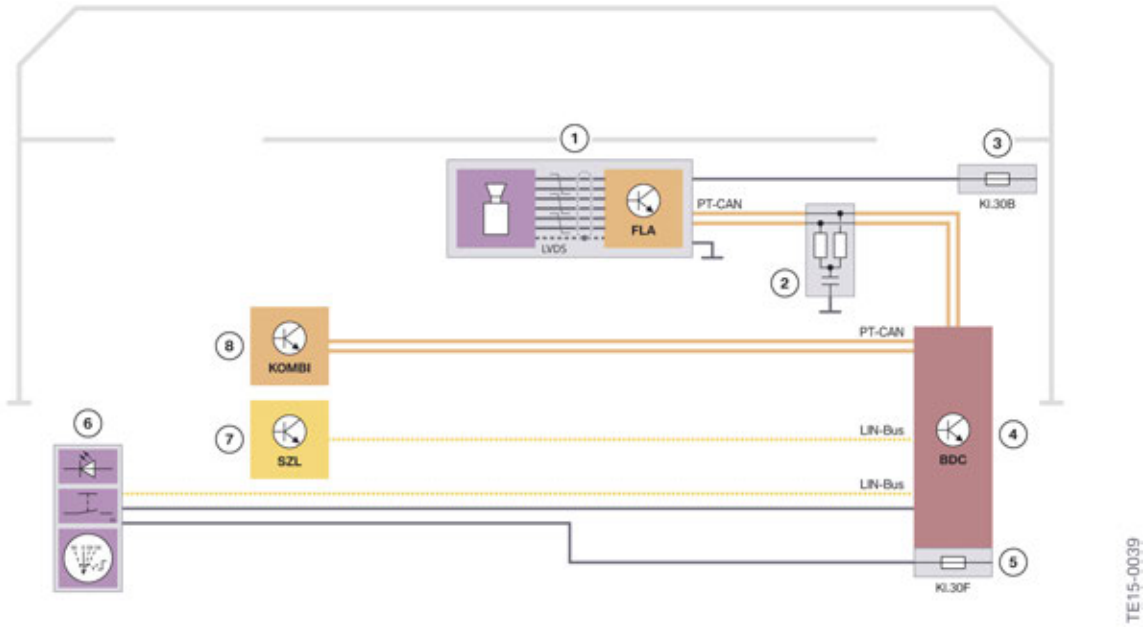

High-beam assistant

Index	Explanation
1	High-beam assistant (FLA)
2	CAN terminator
3	Fuse in the power distribution box, front right
4	Body Domain Controller (BDC)
5	Fuse in the Body Domain Controller
6	Light switch
7	Steering column switch cluster (SZL)
8	Instrument cluster (KOMBI)

1.5. Exterior light staging

The exterior light staging for the G12 may include the following items, depending on the optional equipment:

- Ground lights
- Light carpet

G12 General Vehicle Electronics

1. Exterior Lights

1.5.1. System wiring diagram

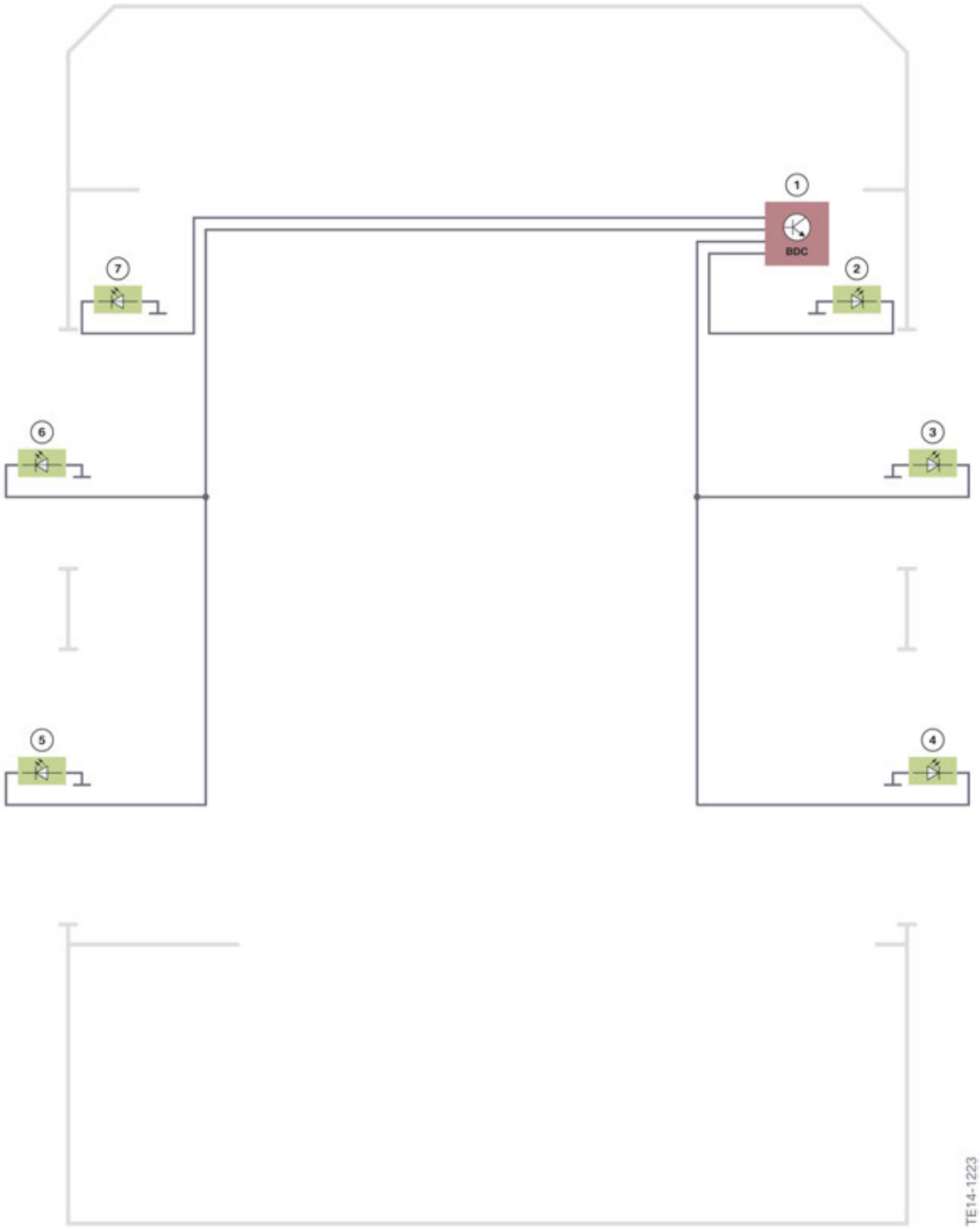

Exterior light staging

G12 General Vehicle Electronics

1. Exterior Lights

Index	Explanation
1	Body Domain Controller (BDC)
2	Light carpet, right
3	Door entry light in front passenger door
4	Door entry light in the rear passenger’s side door
5	Door entry light in the rear driver's side door
6	Door entry light in the driver's door
7	Light carpet, left

1.5.2. Ground lights

The ground lighting is integrated in the corresponding door modules. The LEDs of the ground lighting are activated by the Body Domain Controller (BDC).

1.5.3. Light carpet

The light source is integrated into the side sill, where it is invisible to the customer. This feature can be in a very small installation space through the use of a multi-lens design system. A very flat angle of radiation is also possible. The graphic is superimposed several times by the multi-lens design system and is therefore insensitive to dirt contamination. The light carpet is activated by the Body Domain Controller (BDC).

LEDs in the side sill

LEDs in the side sill

Light carpet

Light carpet

G12 General Vehicle Electronics

2. Interior Lights

2.1. Basic

2.1.1. System wiring diagram

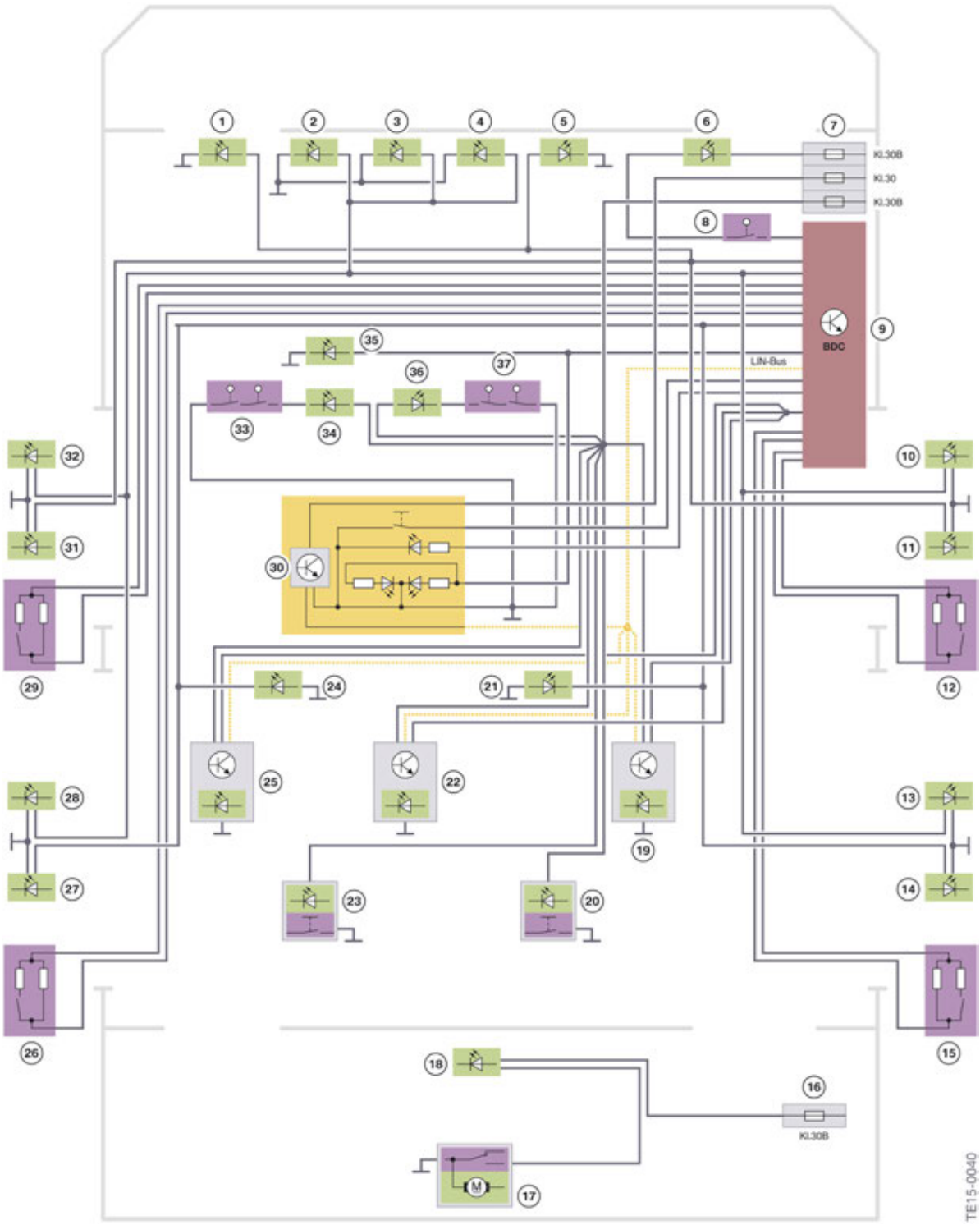

Basic interior light

G12 General Vehicle Electronics

2. Interior Lights

Index	Explanation
1	Footwell light, front left
2	Ambient lighting, dashboard
3	Ambient lighting, dashboard
4	Ambient lighting, dashboard
5	Footwell light, front right
6	Glove box light
7	Fuses in the power distribution box, front right
8	Glove box switch
9	Body Domain Controller (BDC)
10	Door trim panel lighting, passenger's side
11	Door entry light, front passenger side
12	Door contact, front passenger side, front
13	Door trim panel lighting, passenger’s side rear
14	Door entry light, passenger’s side rear
15	Door contact on front passenger side, rear
16	Fuse in the power distribution box, rear right
17	Tailgate contact switch in the tailgate lock
18	Luggage compartment light
19	Interior light, rear right (on vehicles with panorama glass roof)
20	Make-up mirror light, rear right
21	Footwell light, rear right
22	Interior light, rear center (on vehicles without panorama glass roof)
23	Make-up mirror light, rear left
24	Footwell light, rear left
25	Interior light, rear left (on vehicles with panorama glass roof)
26	Door contact on driver's side, rear
27	Door entry light, driver’s side rear
28	Door trim panel lighting, driver’s side rear
29	Door contact, driver's side, front
30	Front interior light
31	Door entry light, driver's side
32	Door trim panel lighting, driver’s side
33	Switch for make-up mirror, left

Index	Explanation
34	Make-up mirror light, left
35	Center console storage compartment lighting
36	Make-up mirror light, right
37	Switch for make-up mirror, right

In the basic interior lighting configuration, the following interior lights are connected with the Body Domain Controller via LIN-bus:

- Interior light in the roof function center (FZD)
- Interior light in the center of the rear passenger compartment on vehicles without panorama glass roof
- Interior lights on the left and right of the rear passenger compartment on vehicles with panorama glass roof

The glove box light is switched by the glove box switch.

The luggage compartment light is switched by the tailgate contact switch in the tailgate lock.

All other interior lights are activated directly by the Body Domain Controller.

Depending on the optional equipment, the G12 has different light elements for the interior lighting.

2.2. Ambient lighting

The ambient lighting includes 6 predefined, selectable light designs/colors.

The light design/color and brightness can be selected by means of the controller.
The selected design is displayed on the CID.

G12 General Vehicle Electronics

2. Interior Lights

2.2.1. System wiring diagram

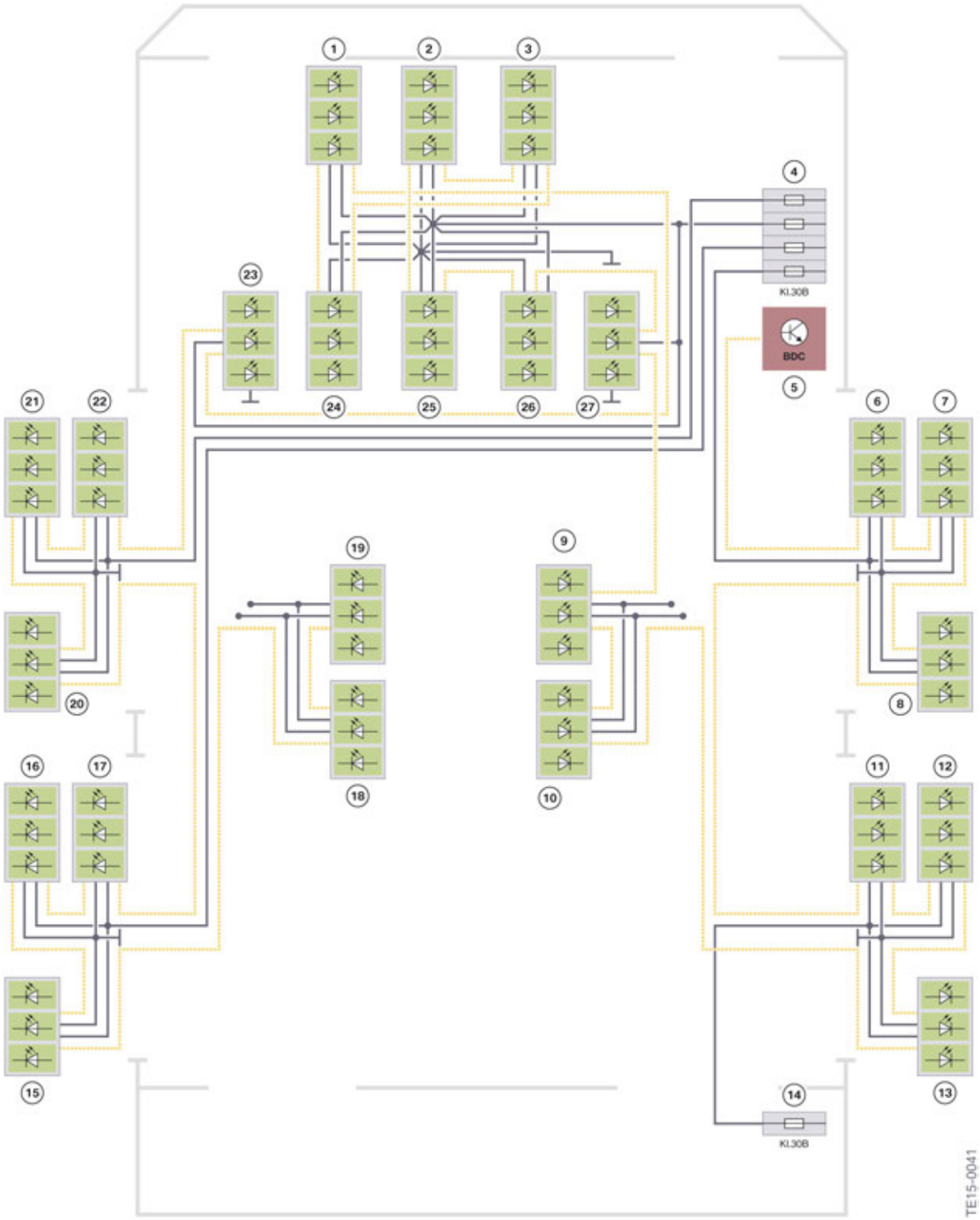

Interior lighting, ambient lighting

G12 General Vehicle Electronics

2. Interior Lights

Index	Explanation
1	Ambient lighting, instrument panel, driver's side
2	Ambient lighting, instrument panel, passenger's side
3	Ambient lighting, instrument panel, passenger's side
4	Fuses in the power distribution box, front right
5	Body Domain Controller (BDC)
6	Lighting for door storage compartment, passenger's side
7	Door trim panel lighting, passenger's side
8	Door contour lighting, passenger's side
9	Backrest lighting, front passenger seat
10	Footwell lighting, passenger’s side rear
11	Lighting for door storage compartment, passenger's side rear
12	Door trim panel lighting, passenger's side rear
13	Door contour lighting, passenger's side rear
14	Fuse in the power distribution box, rear right
15	Door contour lighting, driver's side rear
16	Door trim panel lighting, driver’s side rear
17	Door storage compartment lighting, driver’s side rear
18	Footwell lighting, driver’s side rear
19	Backrest lighting, driver's seat
20	Door contour lighting, driver's side
21	Door trim panel lighting, driver’s side
22	Door storage compartment lighting, driver’s side
23	Footwell light, front left
24	Contour lighting, instrument panel, driver's side
25	Contour lighting, instrument panel, passenger's side
26	Contour lighting, instrument panel, passenger's side
27	Footwell light, front right

RGB (red, yellow, blue) LED modules are used for ambient lighting in the G12.

The ambient interior lighting is controlled via a separate Local Interconnect Network bus. All the individual LED modules are connected in series via LIN-bus.

If the Local Interconnect Network bus is interrupted at one location or the microcontroller at the LED is defective, the other light source is interrupted at this location. A search for the fault must be carried out at the location where the last LED illuminates.

2.3. Light Effect Manager

The following lights are controlled via the Light Effect Manager (LEM):

- Lighting of the panorama glass roof
- Lighting of the light sabers at the B-pillars of the G12
- Lighting of the speaker covers in the High End audio system

G12 General Vehicle Electronics

2. Interior Lights

2.3.1. System wiring diagram

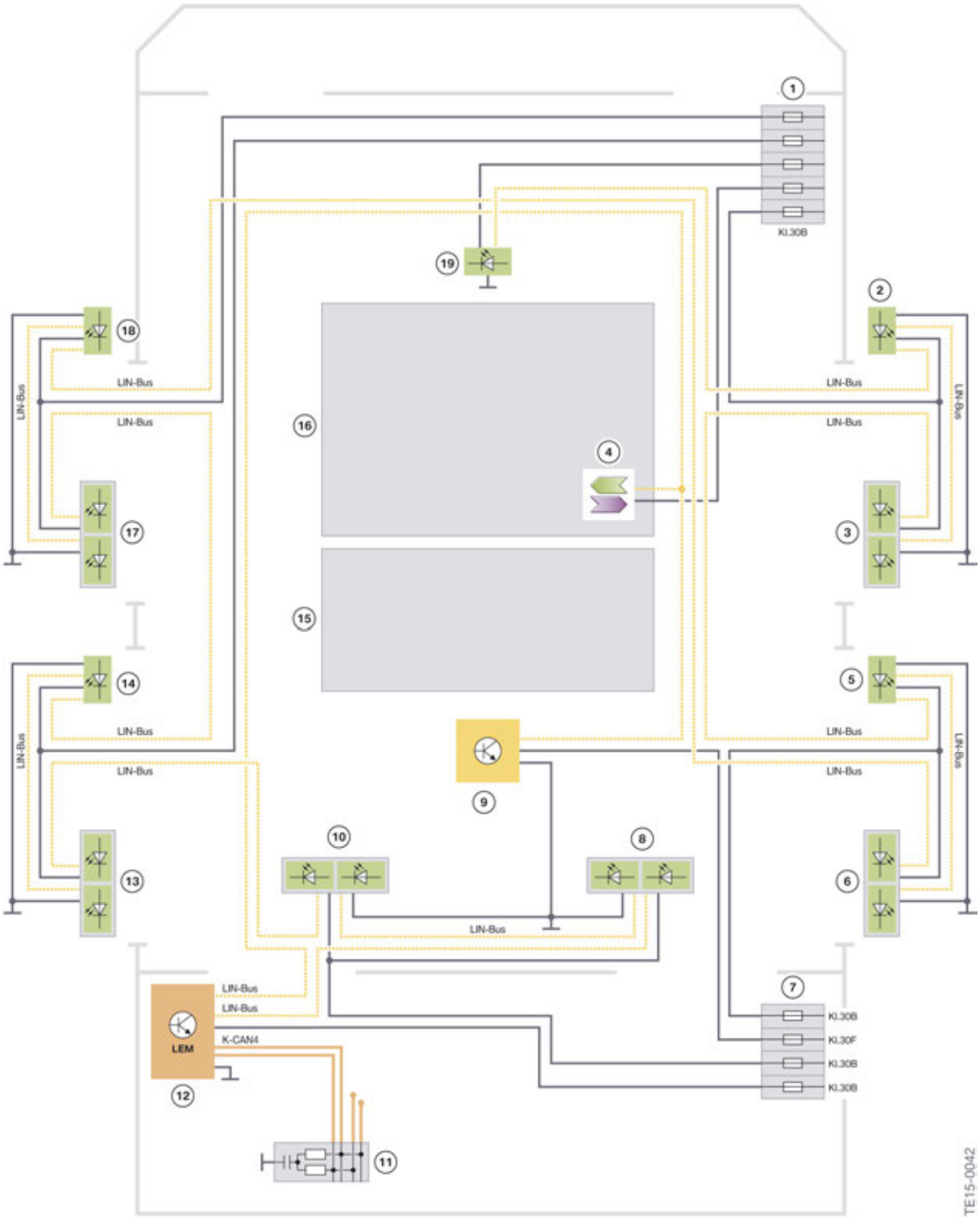

Light Effect Manager

G12 General Vehicle Electronics

2. Interior Lights

Index	Explanation
1	Fuses in the power distribution box, front right
2	Lighting for tweeter cover, passenger's side door
3	Lighting for mid-range speaker cover, passenger's side door
4	Supply for ambient lighting, panorama glass roof
5	Light saber, passenger's side
6	Lighting for mid-range speaker cover, rear passenger's side door
7	Fuses in the power distribution box, rear right
8	Lighting for tweeter cover on right storage shelf
9	Touch Command
10	Lighting for tweeter cover on left storage shelf
11	CAN terminator
12	Light Effect Manager (LEM)
13	Lighting for tweeter cover, rear driver's side door
14	Light saber, driver's side
15	Panorama glass roof, rear
16	Panorama glass roof, front
17	Lighting for mid-range speaker cover, driver's side door
18	Lighting for tweeter cover, driver's side door
19	Lighting for center speaker

LED modules are used for the speaker cover lighting.

White LEDs are used for the light saber lighting.

The lighting of the panorama glass roof is accomplished using LEDs.

The lighting is controlled via 2 local LIN-buses:

- LIN-bus from Light Effect Manager to the panorama glass roof and Touch Command
- LIN-bus from Light Effect Manager to the light sabers and to the LED modules of the speaker covers

2.3.2. System components

Light Effect Manager

Light Effect Manager

The control unit Light Effect Manager (LEM) is responsible for controlling the following lighting:

- Panorama glass roof
- Light sabers at the B-pillars of the G12
- Speaker covers in the High End audio system
- Touch Command snap-in adaptor

Panorama glass roof

The ambient lighting of the interior is extended to the panorama glass roof. This creates a high-quality roof appearance for journeys at night.

The light colors are coupled with the colors of the ambient lighting of the vehicle interior. The lighting of the panorama glass roof can be dimmed separately.

Function

The light is fed into the window glass by means of LED modules and fiber optic conductors installed at the sides. The light is refracted at the printed graphic and diverted into the interior.

G12 General Vehicle Electronics

2. Interior Lights

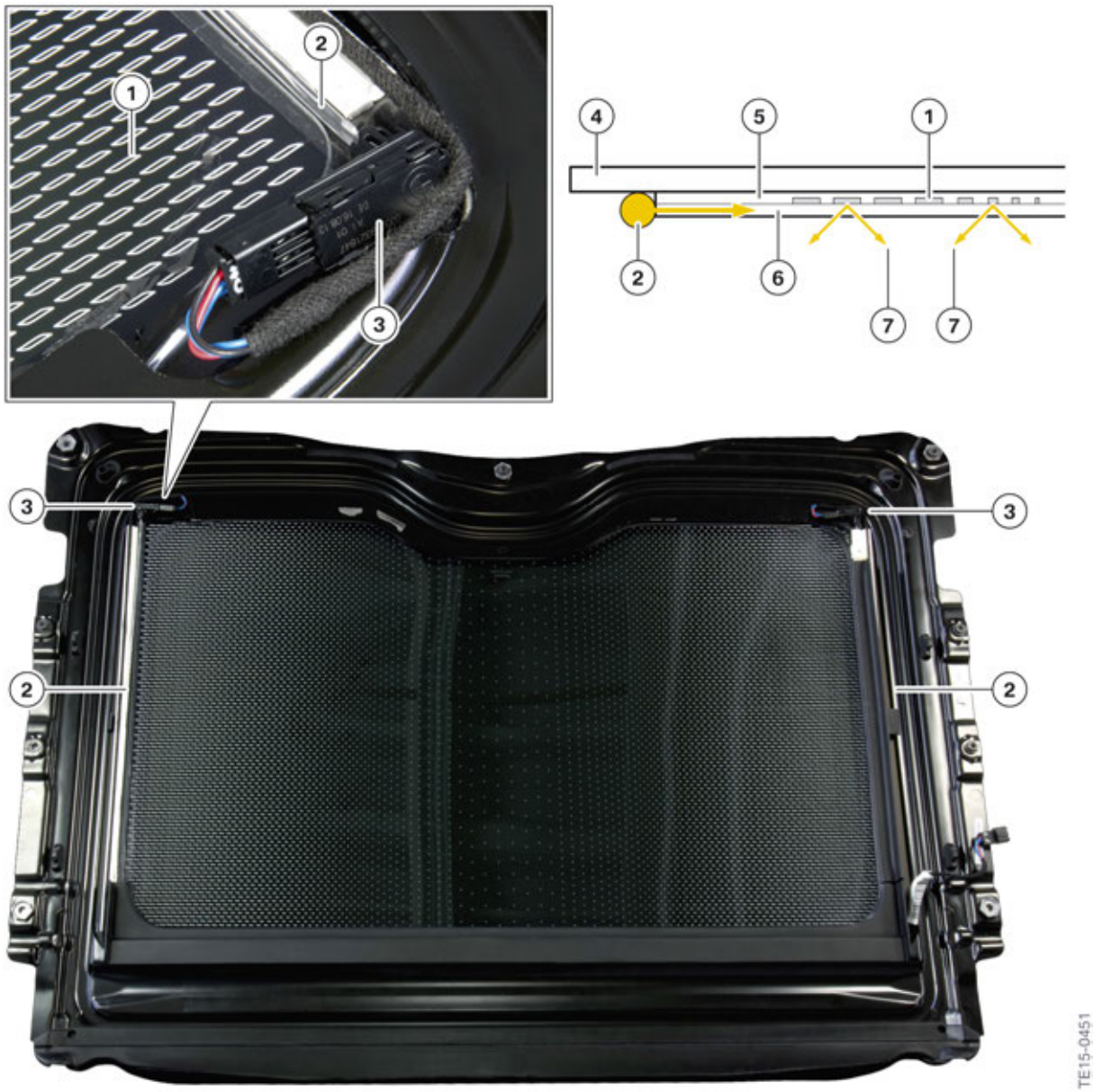

Operating principle of panorama glass roof lighting

Index	Explanation
1	Printed graphic
2	Fiber-optic conductor
3	LED
4	Outer, tinted glass pane
5	Foil
6	Inner glass pane
7	Visible light in the vehicle interior

G12 General Vehicle Electronics

2. Interior Lights

Light saber

The two light sabers are installed in the rear doors and are illuminated white. The light sabers can be dimmed and switched off only as a pair.

Operation is possible via:

- Controller
- Rear Seat Entertainment system
- Capacitive sensors on the light sabers

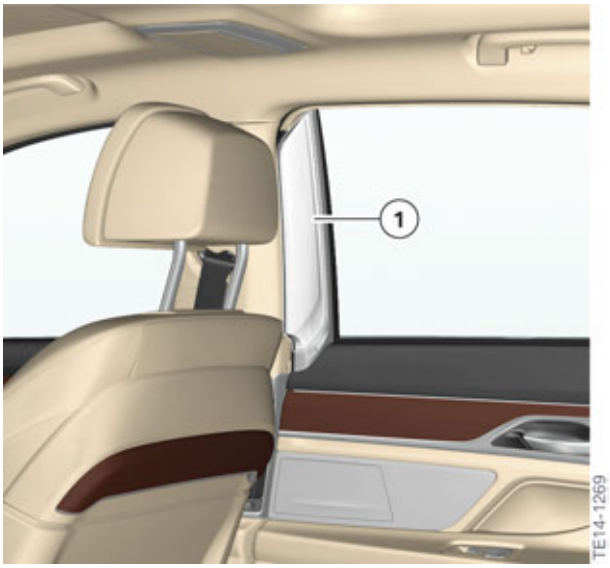

Light saber

Index	Explanation
1	Light saber

Speaker covers for High End audio system

The lighting of the tweeter covers is controlled via the Light Effect Manager.

G12 General Vehicle Electronics

3. Washer/wiper System

3.1. System wiring diagram

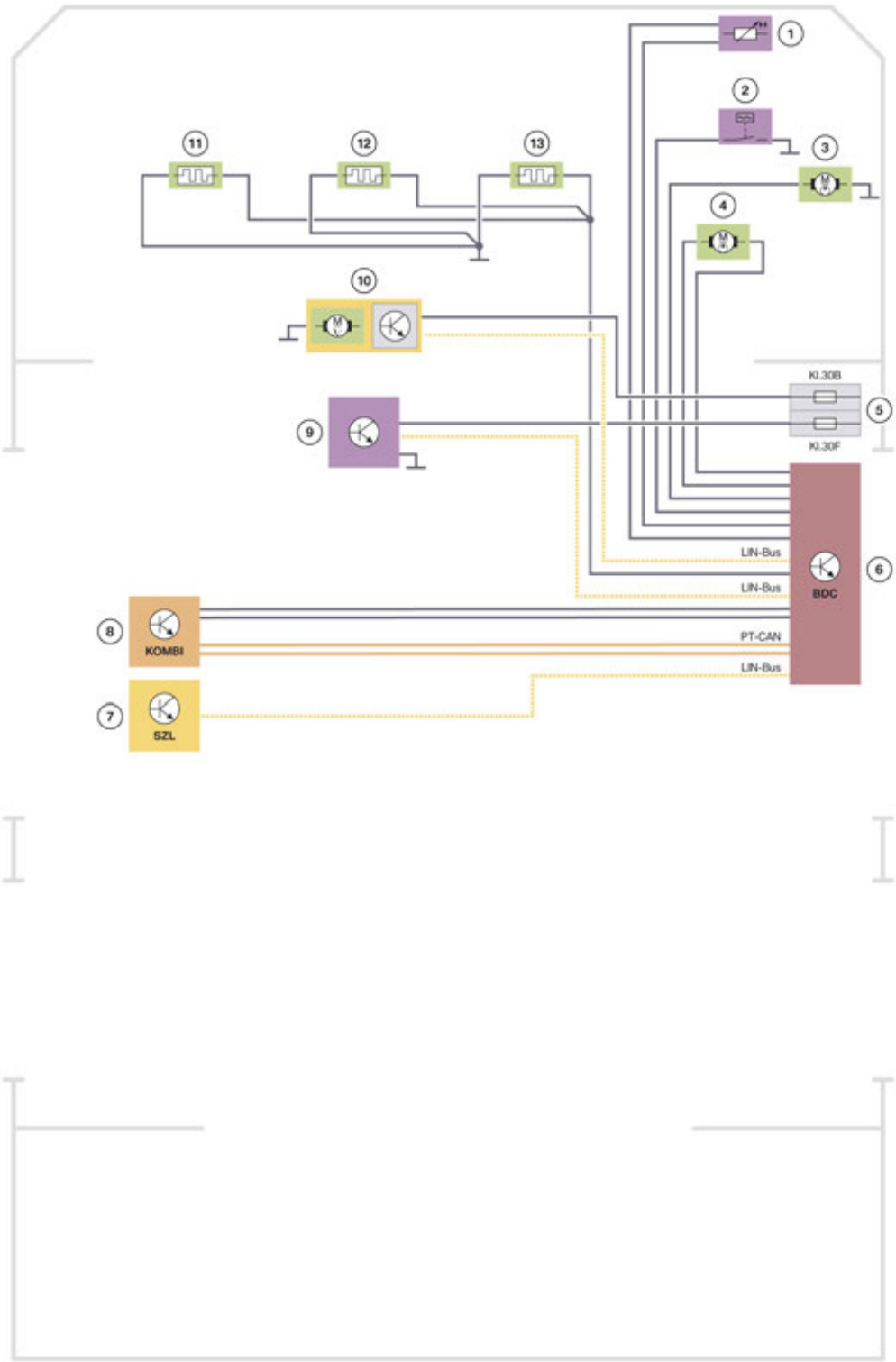

Washer/wiper system

G12 General Vehicle Electronics

3. Washer/wiper System

Index	Explanation
1	Outside temperature sensor
2	Washer fluid level switch
3	Washer pump for headlight cleaning system
4	Electric motor, windscreen washer pump
5	Fuses in the power distribution box, front right
6	Body Domain Controller (BDC)
7	Steering column switch cluster (SZL)
8	Instrument cluster (KOMBI)
9	Rain-light-solar-condensation sensor
10	Wiper motor
11	Heated washer jet, left
12	Heated washer jet, center
13	Heated washer jet, right

The wiper motor is a 12 V motor with a transmission. The control unit, the wiper motor and the transmission form one replaceable unit. This wiper motor unit comprises:

- A permanent magnet, direct current motor with attached reduction gear
- Control unit electronics with eccentric shaft sensor and suppressor components with attached plug connection

The control unit in the wiper motor is able to identify the following faults:

- Faults in the control unit electronics
- Short circuits at the motor and sensor system
- Open lines at the motor and sensor system

The control unit in the wiper motor does not have a fault memory. The fault code entry is stored in the Body Domain Controller (BDC).

The heated washer jets are activated by the Body Domain Controller.

The Body Domain Controller is also responsible for activation of the windscreen washer pump and evaluation of the washer fluid level switch.

G12 General Vehicle Electronics

4. Locking and Security Functions

4.1. Comfort Access

4.1.1. System wiring diagram

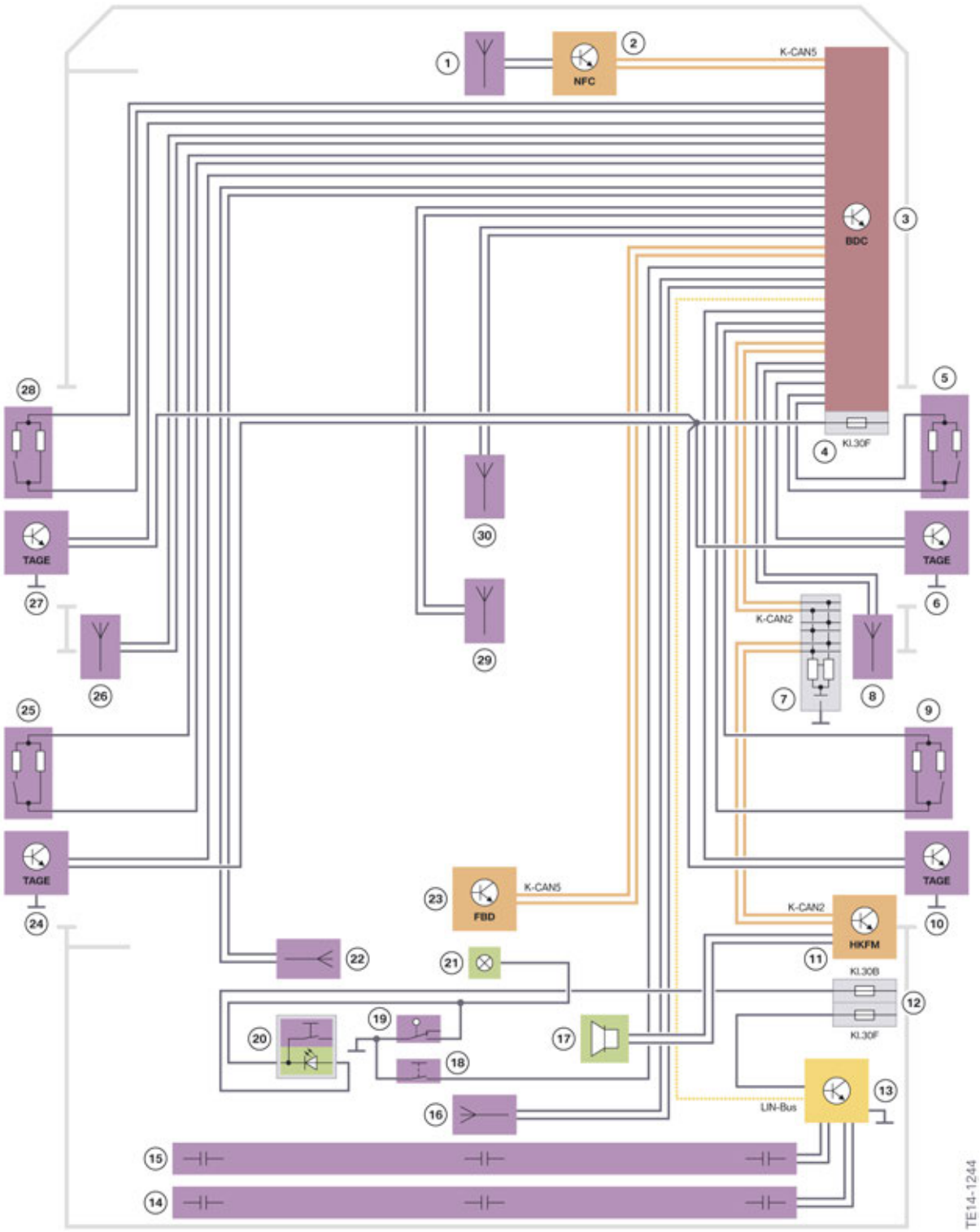

G12 General Vehicle Electronics
4. Locking and Security Functions

Index	Explanation
1	Aerial, Near Field Communication
2	Control unit, Near Field Communication (NFC)
3	Body Domain Controller (BDC)
4	Fuse in the Body Domain Controller
5	Switch in door lock of front passenger door
6	Outside door handle electronics (TAGE), front passenger door
7	CAN terminator
8	Comfort Access aerial, side sill, right
9	Switch in door lock of rear passenger door
10	Outside door handle electronics (TAGE), rear passenger door
11	Tailgate function module (HKFM)
12	Fuses in the power distribution box, rear right
13	Control unit for contactless rear lid opening
14	Sensor at bottom for non-contact tailgate opening
15	Sensor at top for non-contact tailgate opening
16	Comfort Access aerial, bumper, rear
17	Acoustic warning device for tailgate activation
18	Button for tailgate
19	Tailgate contact switch in the tailgate lock
20	Button for closing tailgate
21	Luggage compartment light
22	Comfort Access aerial, luggage compartment
23	Remote control receiver (FBD)
24	Outside door handle electronics (TAGE), rear driver's side door
25	Outside door handle electronics (TAGE), rear driver's side door
25	Switch in door lock of rear driver's side door
26	Comfort Access aerial, side sill, left
27	Outside door handle electronics (TAGE), driver's door
28	Switch in door lock of driver's door
29	Comfort Access aerial, passenger compartment
30	Comfort Access aerial, passenger compartment

G12 General Vehicle Electronics

4. Locking and Security Functions

4.2. Central locking system

4.2.1. System wiring diagram

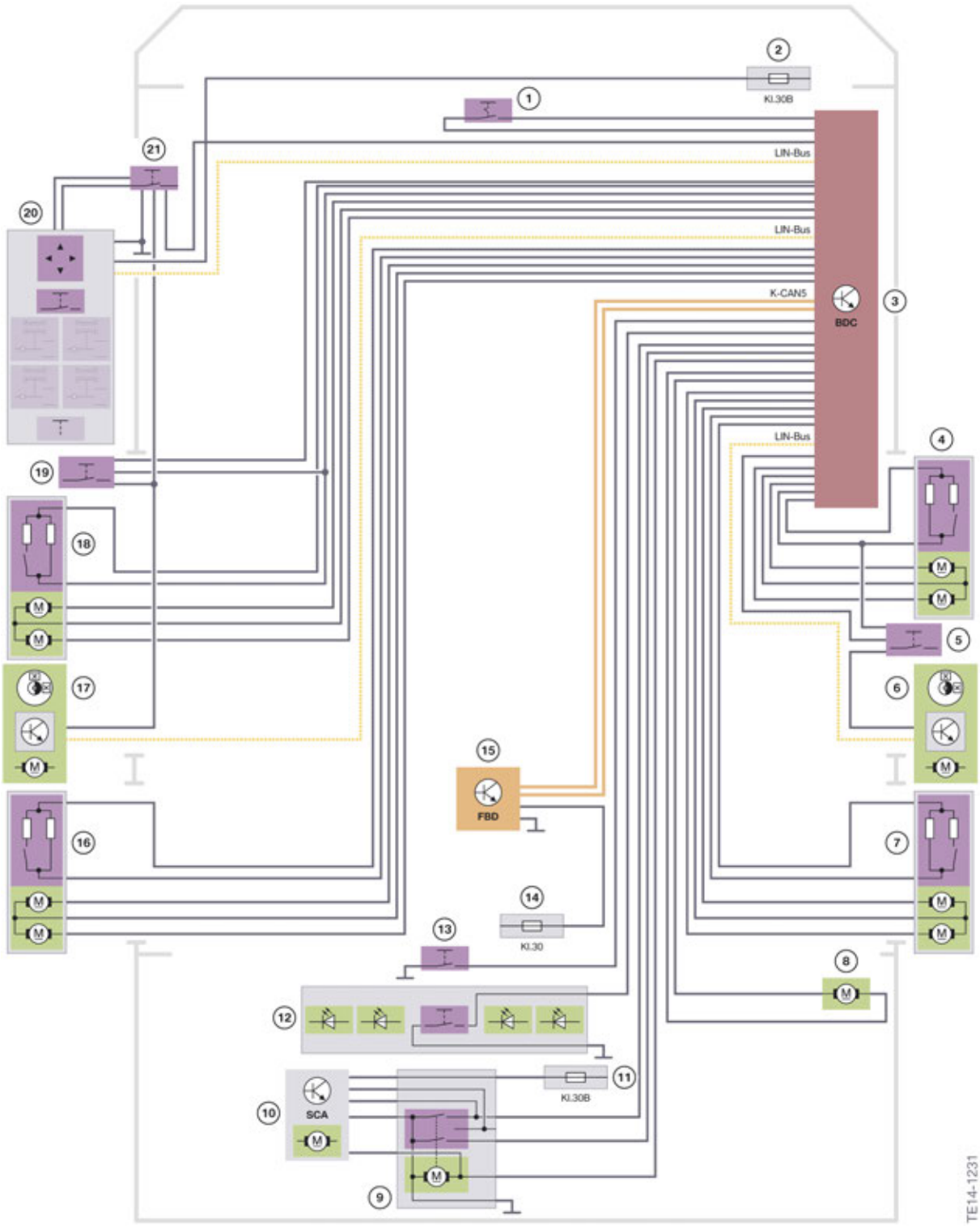

Central locking system

Index	Explanation
1	Valet position switch
2	Fuse in the power distribution box, front right
3	Body Domain Controller (BDC)
4	Door lock, front passenger door
5	Central locking button, front passenger door
6	Power window electronics, passenger's side front
7	Door lock, passenger's side, rear
8	Servodrive for fuel filler flap
9	Tailgate contact switch in the tailgate lock
10	Automatic Soft Close drive
11	Fuse in the rear power distribution box
12	Number plate light strip with button for tailgate
13	Button for closing tailgate
14	Fuse in the rear power distribution box
15	Remote control receiver (FBD)
16	Door lock, driver's side, rear
17	Power window electronics, driver's side front
18	Door lock, driver's door
19	Central locking button, driver's door
20	Switch block, driver's door
21	Button for opening tailgate

4.2.2. Function

The function of the central locking system of the G12 is based on that of current BMW models. All functions relevant for the central locking system are controlled by the Body Domain Controller. The function is as follows:

- The radio signal from the ID transmitter is received by the remote control receiver.
- The signal causes the BDC to activate the central locking system and the interior lighting.
- The BDC evaluates the status of all door contacts, the tailgate and valet position switch.
- The status of the central locking system button is also evaluated by the BDC. The BDC activates the central locking system, depending on the status.
- The BDC is responsible for activation of the central locking system and the drive for automatic soft-close in the tailgate.
- Activation of fuel filler flap unlocking is also performed by the BDC.

4.3. Automatic operation of tailgate

4.3.1. System wiring diagram

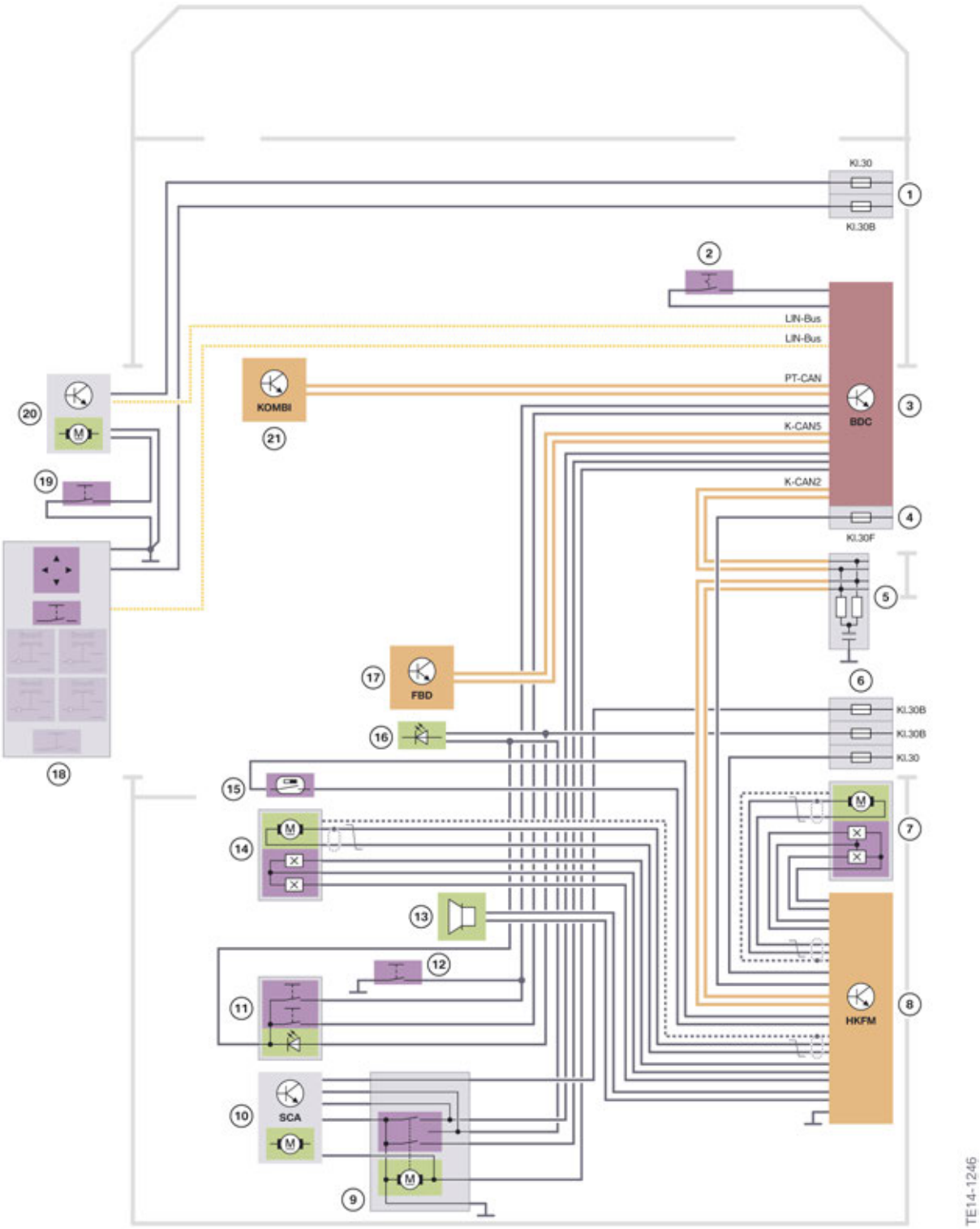

Automatic operation of tailgate

G12 General Vehicle Electronics

4. Locking and Security Functions

Index	Explanation
1	Fuses in the power distribution box, front right
2	Valet position switch
3	Body Domain Controller (BDC)
4	Fuse in the Body Domain Controller
5	CAN terminator
6	Fuses in the rear power distribution box
7	Tailgate lift drive, right
8	Tailgate function module (HKFM)
9	Tailgate contact switch in the tailgate lock
10	Automatic Soft Close drive
11	Button for closing tailgate (inner)
12	Button for tailgate
13	Acoustic warning device for tailgate activation
14	Tailgate lift drive, left
15	Reed contact
16	Luggage compartment light
17	Remote control receiver (FBD)
18	Switch block, driver's door
19	Button for opening tailgate
20	Power window motor, driver's side front
21	Instrument cluster (KOMBI)

4.4. Automatic Soft Close system

4.4.1. System wiring diagram

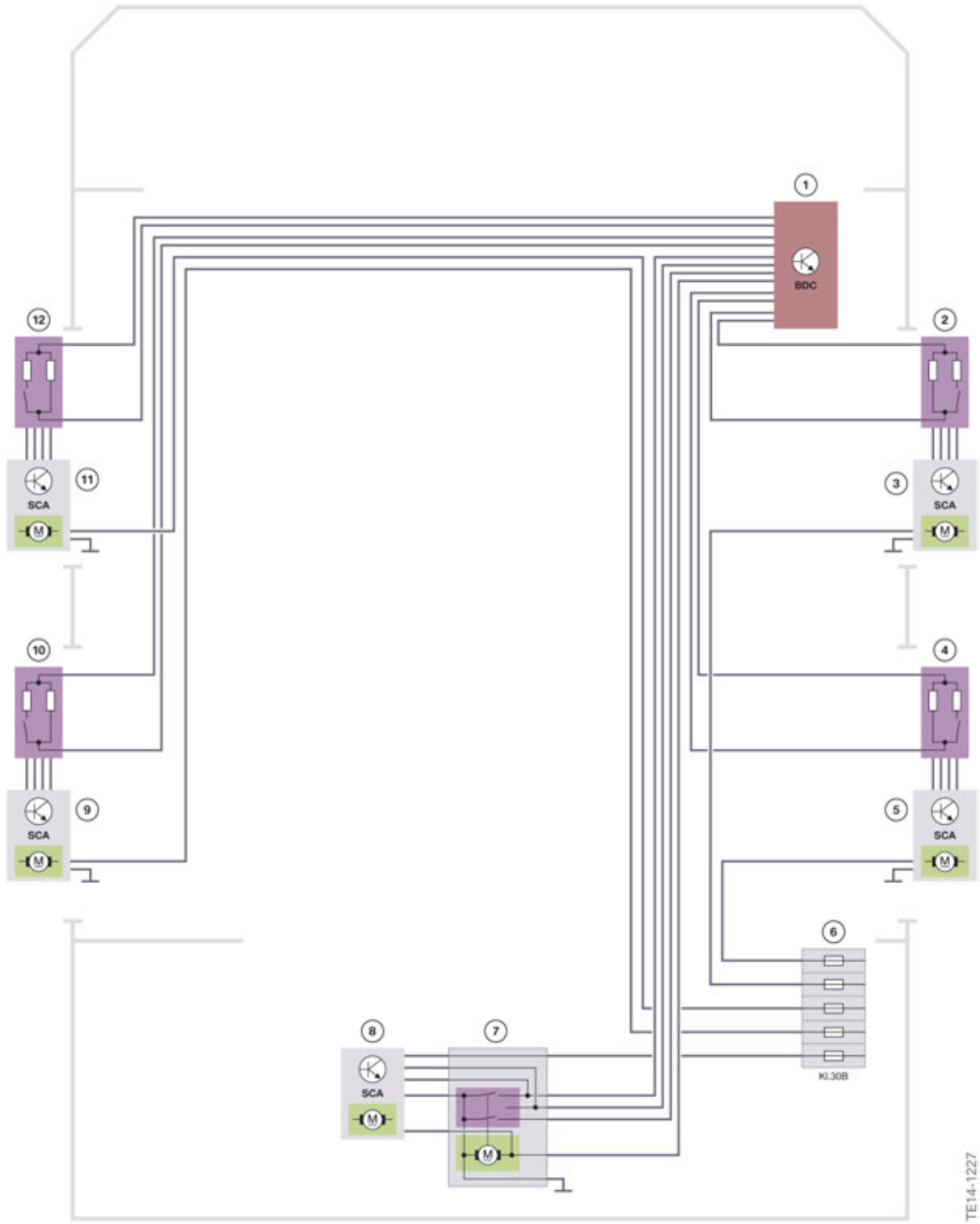

G12 General Vehicle Electronics

4. Locking and Security Functions

Index	Explanation
1	Body Domain Controller (BDC)
2	Switch in door lock of front passenger door
3	Automatic Soft Close drive, front passenger door
4	Switch in door lock of rear passenger door
5	Automatic Soft Close drive, rear passenger door
6	Fuses in the power distribution box, rear right
7	Tailgate contact switch in the tailgate lock
8	Automatic Soft Close drive, tailgate
9	Automatic Soft Close drive, rear driver's-side door
10	Switch in door lock of rear driver's side door
11	Automatic Soft Close drive, driver's door
12	Switch in door lock of driver's door

G12 General Vehicle Electronics

5. Alarm System

5.1. System wiring diagram

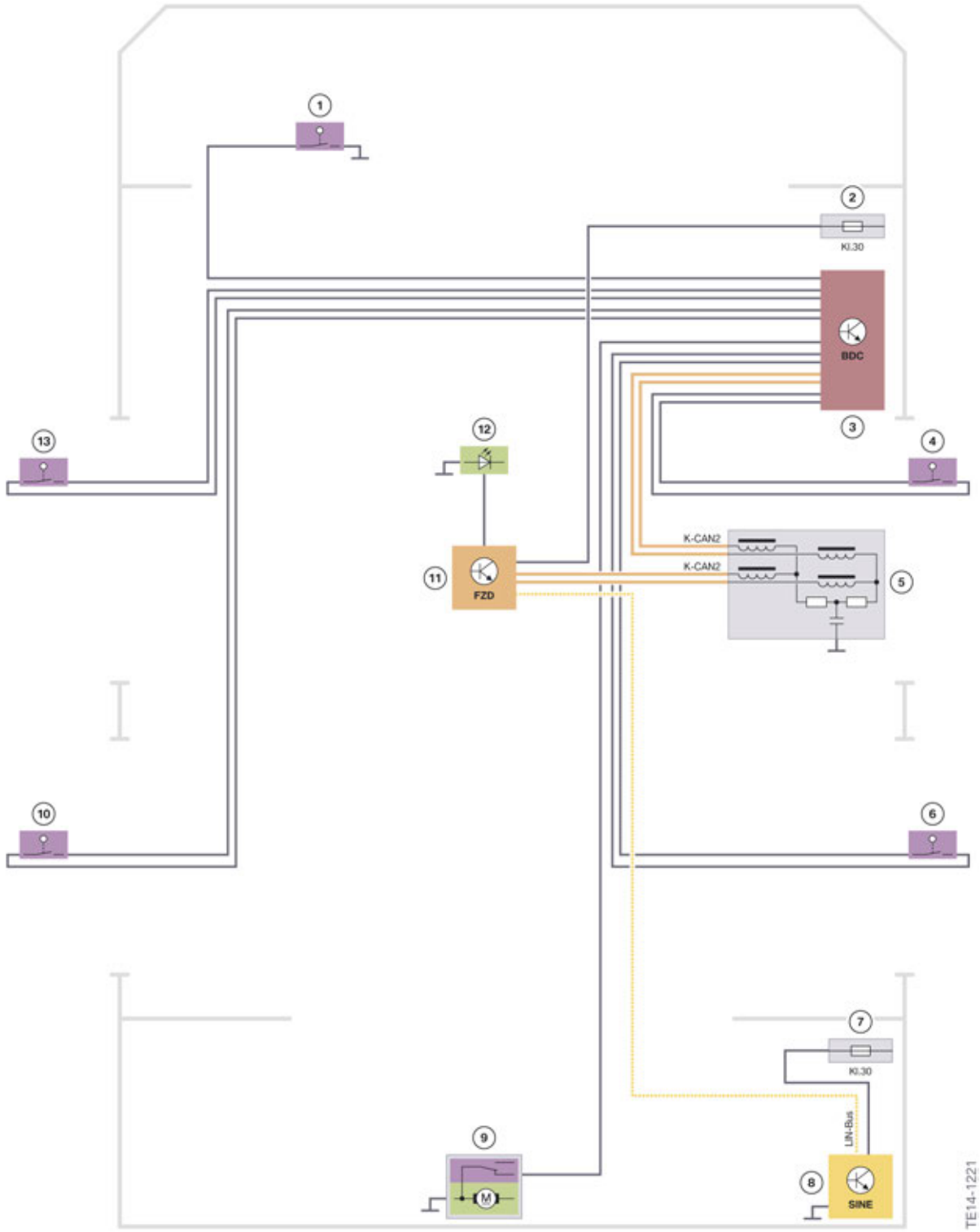

Alarm system

G12 General Vehicle Electronics

5. Alarm System

Index	Explanation
1	Engine compartment lid contact switch
2	Fuse in the power distribution box, front right
3	Body Domain Controller (BDC)
4	Door contact, front passenger side, front
5	CAN terminator
6	Door contact on front passenger side, rear
7	Fuse in the power distribution box, rear right
8	Siren with tilt alarm sensor
9	Tailgate contact switch in the tailgate lock
10	Door contact on driver's side, rear
11	Roof function center (FZD)
12	LED in the interior mirror
13	Door contact, driver's side, front

The alarm system in the G12 is equipped with an ultrasonic interior movement detector for monitoring the passenger compartment. The ultrasonic interior movement detector (USIS) is fully integrated in the roof function center (FZD).

The door contacts, engine compartment lid contact switch and the opening of the tailgate are monitored by the Body Domain Controller. As soon as a status changes, the ultrasonic interior movement detector receives this information via the K-CAN2. If the alarm system is activated, the siren with tilt alarm sensor is activated by the control unit in the event of a break-in.

The SINE is connected to the FZD via a Local Interconnect Network bus.

The status of the alarm system is displayed via the LED at the interior mirror.

G12 General Vehicle Electronics

6. Power Window Regulator

6.1. System wiring diagram

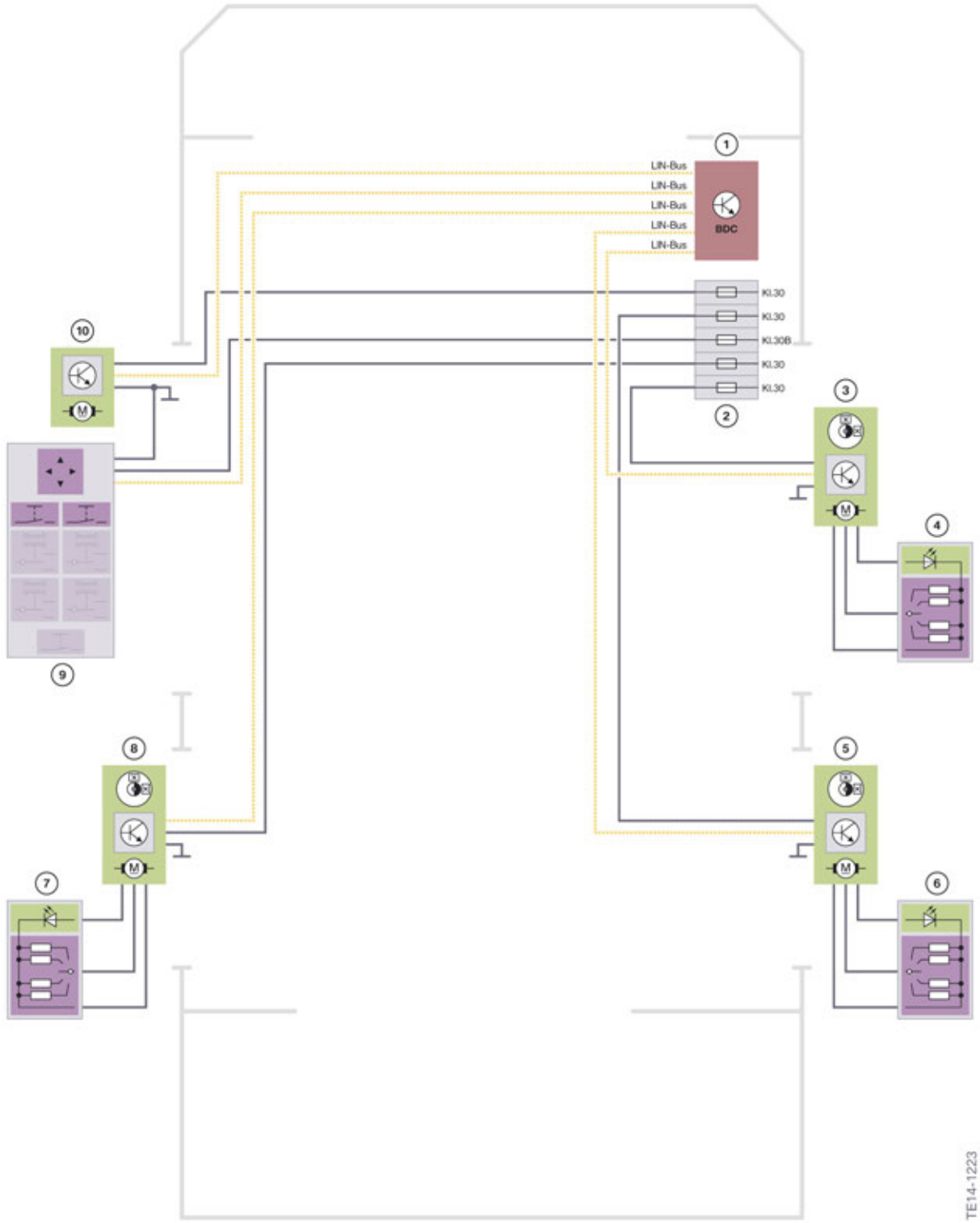

Power window regulator

G12 General Vehicle Electronics

6. Power Window Regulator

Index	Explanation
1	Body Domain Controller (BDC)
2	Fuses in the power distribution box, front right
3	Power window motor, passenger's side
4	Power window switch, front passenger side, front
5	Power window motor, passenger's side rear
6	Power window switch, front passenger side rear
7	Power window switch driver's side, rear
8	Power window motor, driver's side rear
9	Switch block, driver's door
10	Power window motor, driver's side front

G12 General Vehicle Electronics

7. Slide/Tilt Sunroof

7.1. System wiring diagram

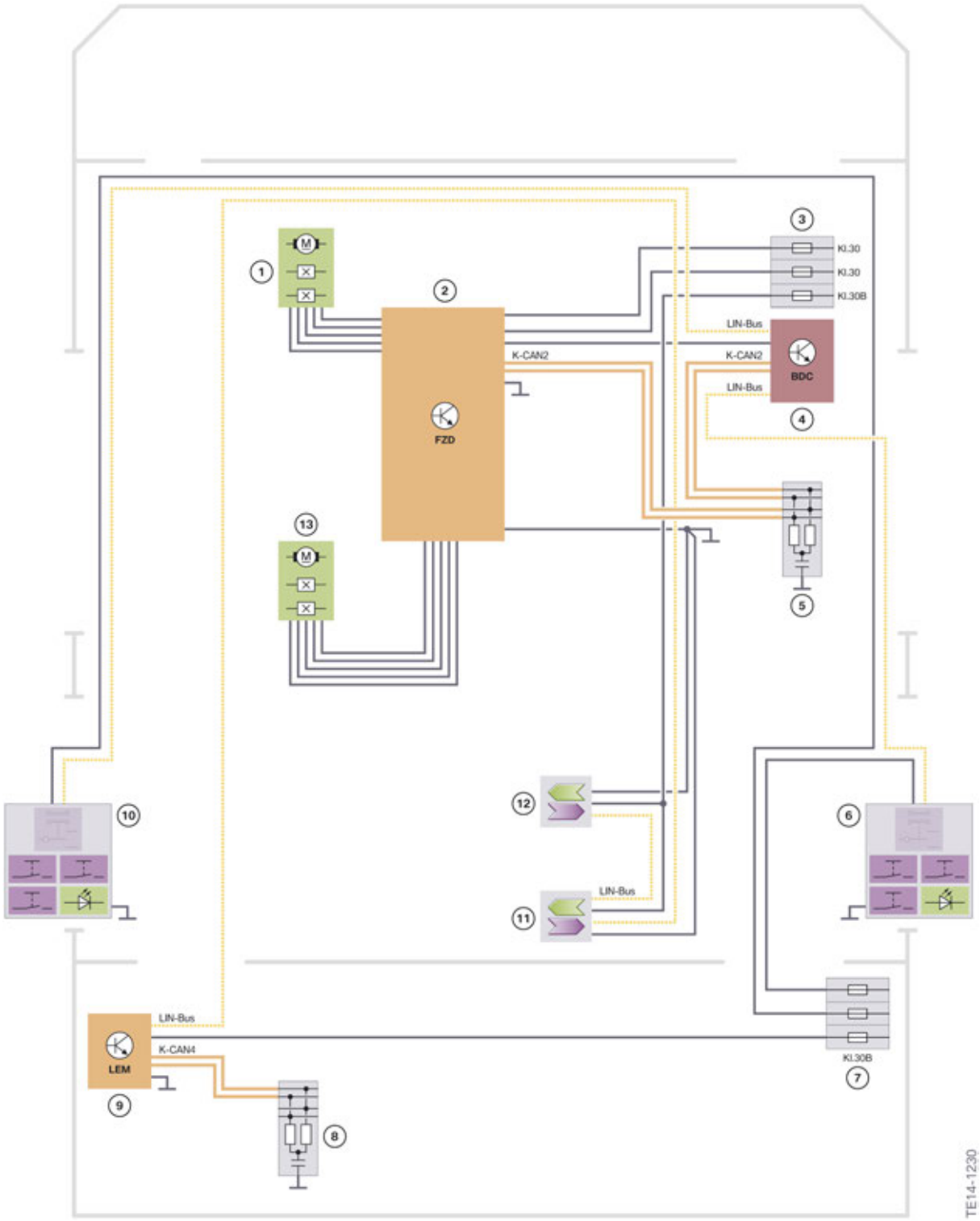

Slide/Tilt sunroof

G12 General Vehicle Electronics

7. Slide/Tilt Sunroof

Index	Explanation
1	Motor, slide/tilt sunroof
2	Roof function center (FZD)
3	Fuses in the power distribution box, front right
4	Body Domain Controller (BDC)
5	CAN terminator
6	Switch block, rear door, right
7	Fuses in the power distribution box, rear right
8	CAN terminator
9	Light Effect Manager (LEM)
10	Switch block, rear door, left
11	Supply for ambient lighting, rear panorama glass roof
12	Supply for ambient lighting, front panorama glass roof
13	Sliding sunshade motor

G12 General Vehicle Electronics

8. Roller Sunblind

8.1. System wiring diagram

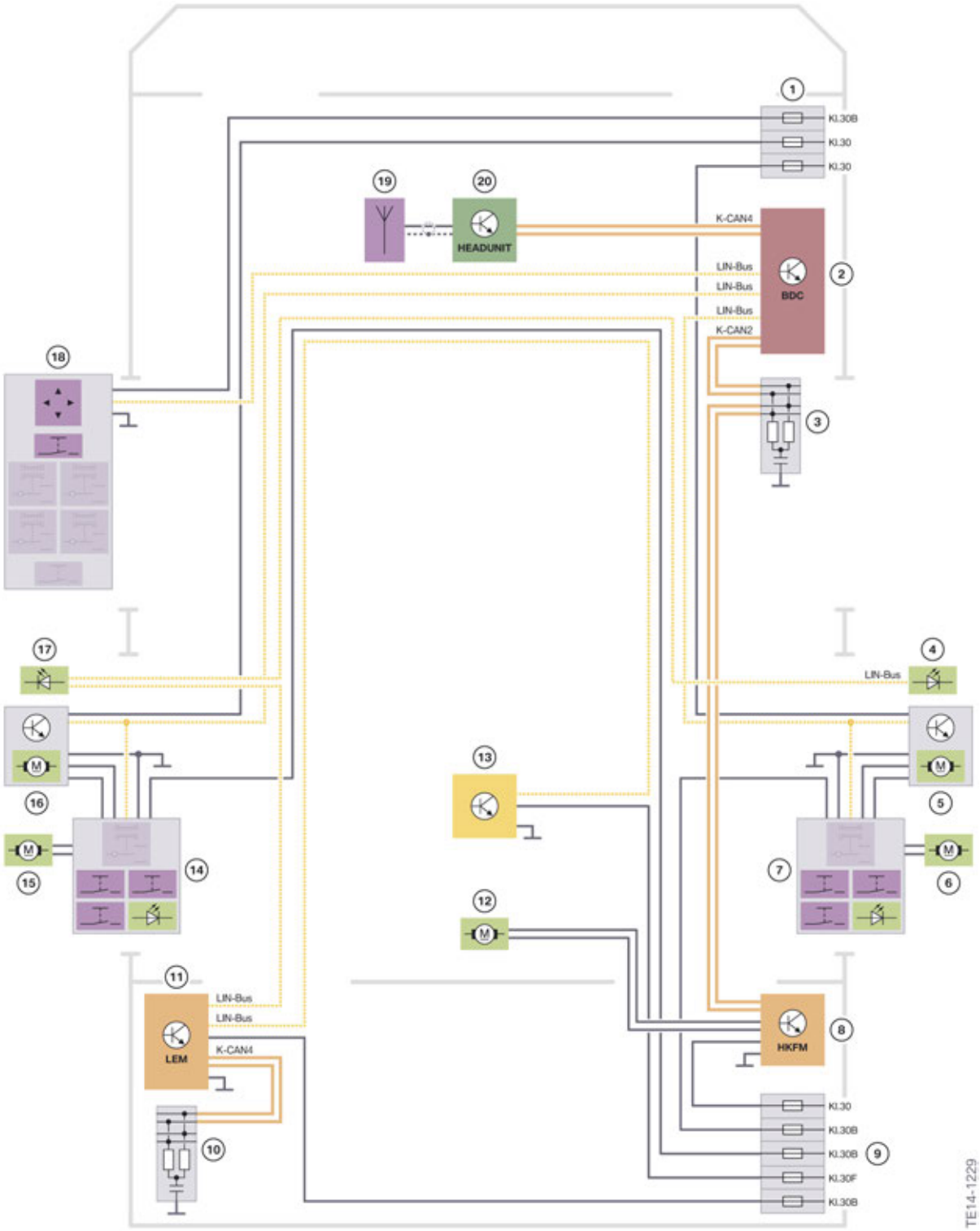

Roller sunblind

G12 General Vehicle Electronics

8. Roller Sunblind

Index	Explanation
1	Fuses in the power distribution box, front right
2	Body Domain Controller (BDC)
3	CAN terminator
4	Light saber, passenger's side
5	Power window electronics, passenger’s side rear
6	Drive for roller sunblind, passenger’s side rear
7	Switch for roller sunblind
8	Tailgate function module (HKFM)
9	Fuses in the power distribution box, rear right
10	CAN terminator
11	Light Effect Manager (LEM)
12	Roller sunblind rive, rear window
13	BMW Touch Command
14	Switch for roller sunblind
15	Drive for roller sunblind, driver’s side rear
16	Power window electronics, driver’s side rear
17	Light saber, driver's side
18	Switch block, driver's door
19	WLAN aerial
20	Head unit

G12 General Vehicle Electronics

9. Steering Column Switch Cluster

9.1. System wiring diagram

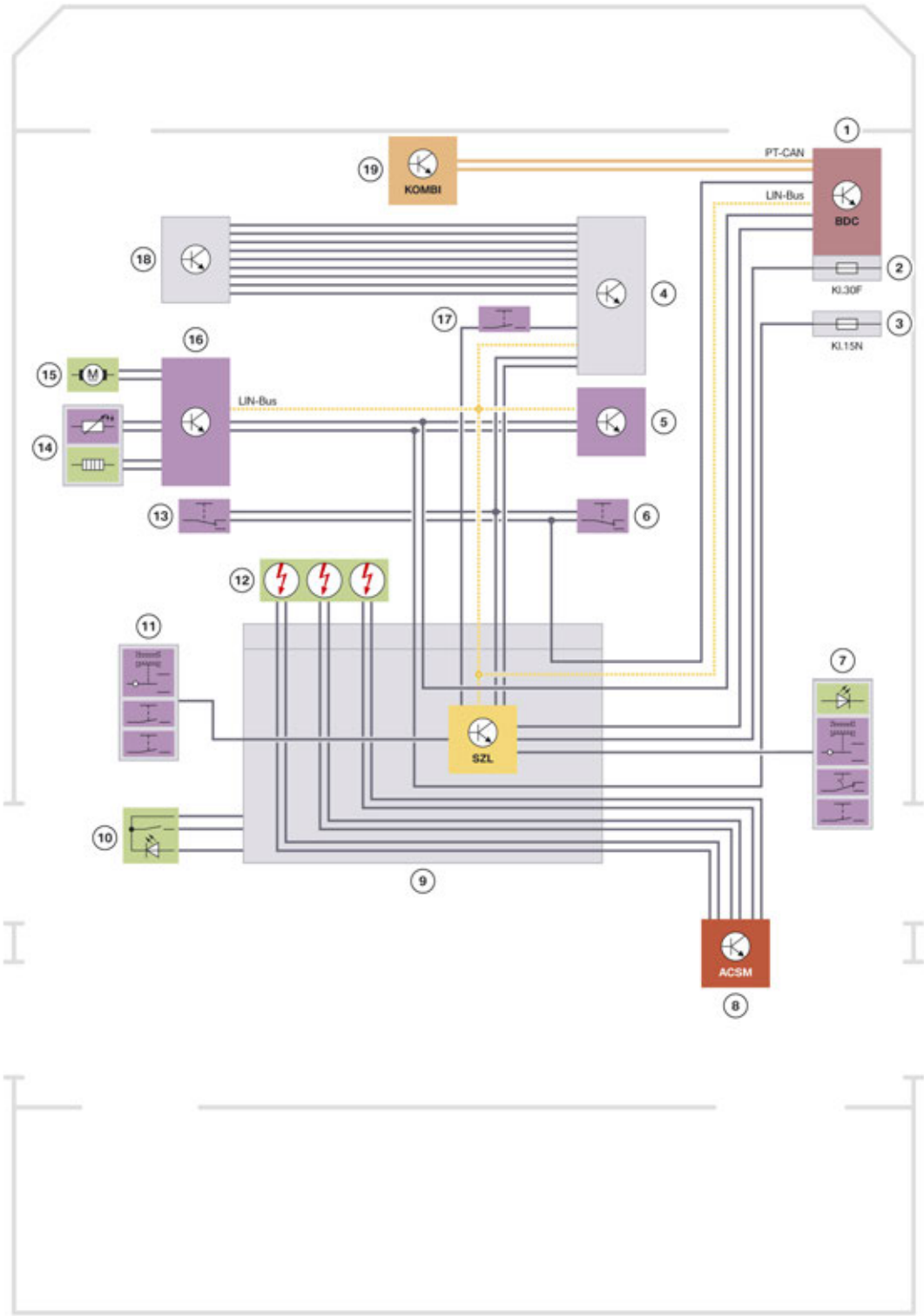

Steering column switch cluster

G12 General Vehicle Electronics

9. Steering Column Switch Cluster

Index	Explanation
1	Body Domain Controller (BDC)
2	Fuse in the Body Domain Controller
3	Fuse in the power distribution box, front right
4	Multifunction steering wheel buttons, right
5	Touch detection HOD (Hands Off Detection)
6	Shift paddle, right
7	Drop arm, right
8	Advanced Crash Safety Module (ACSM)
9	Steering column switch cluster (SZL)
10	Steering-wheel heating button
11	Drop arm, left
12	Driver's airbag
13	Shift paddle, left
14	Steering wheel heating
15	Vibration motor
16	Steering wheel module
17	Horn button
18	Multifunction steering wheel buttons, left
19	Instrument cluster (KOMBI)

All signals of the buttons and switches of the multifunction steering wheel (MFL) and the steering column switch cluster (SZL) are transmitted via Local Interconnect Network (LIN)to the Body Domain Controller (BDC).

G12 General Vehicle Electronics

10. Steering Column Adjustment

10.1. System wiring diagram

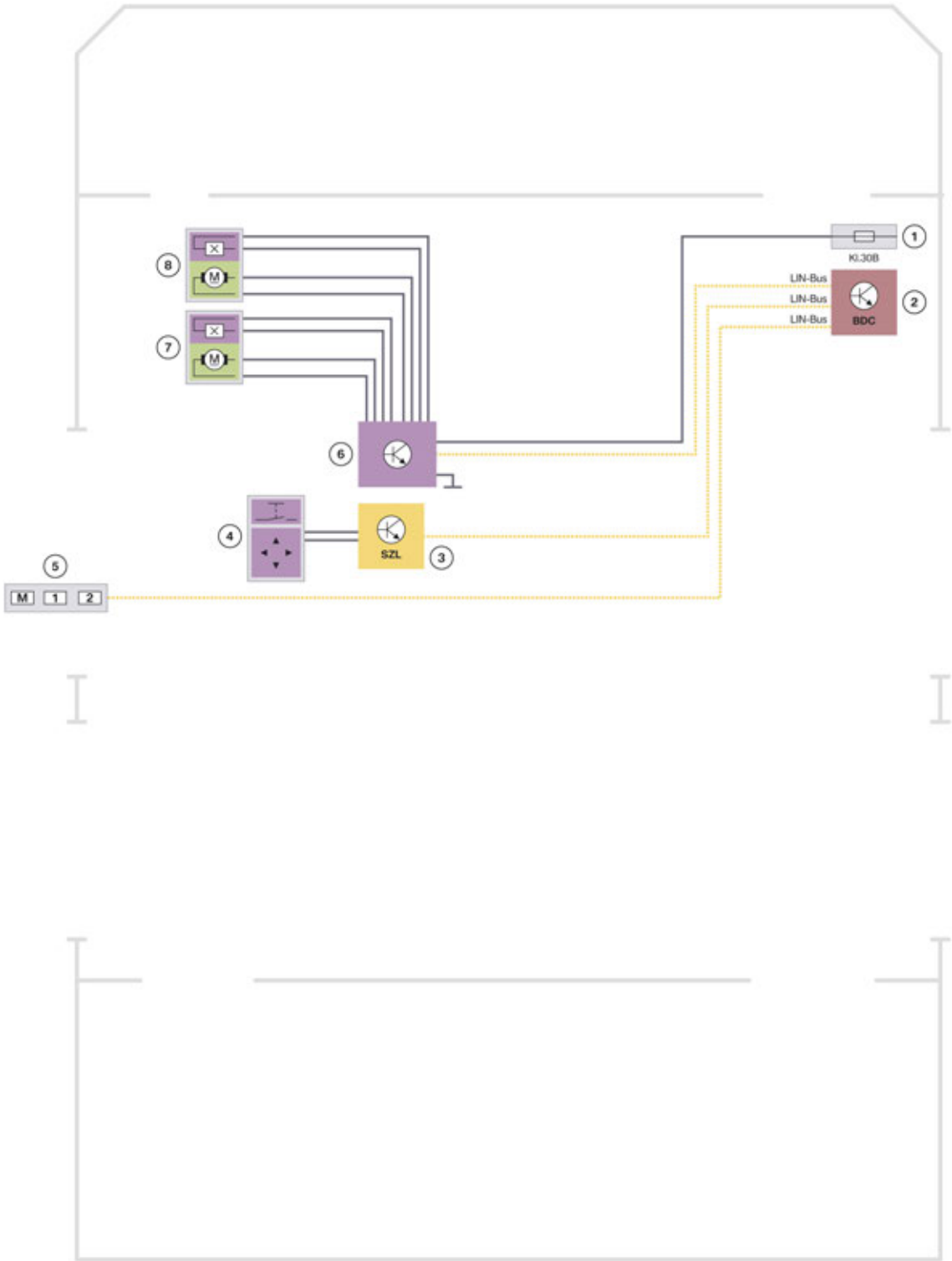

Steering column adjustment

G12 General Vehicle Electronics

10. Steering Column Adjustment

Index	Explanation
1	Fuse in the power distribution box, front right
2	Body Domain Controller (BDC)
3	Steering column switch cluster (SZL)
4	Button for steering column adjustment
5	Memory switch
6	Electronics for steering column adjustment
7	Motor for steering column adjustment, height
8	Motor for steering column adjustment, vertical

G12 General Vehicle Electronics

11. Exterior Mirrors

11.1. Exterior mirror, basic version

11.1.1. System wiring diagram

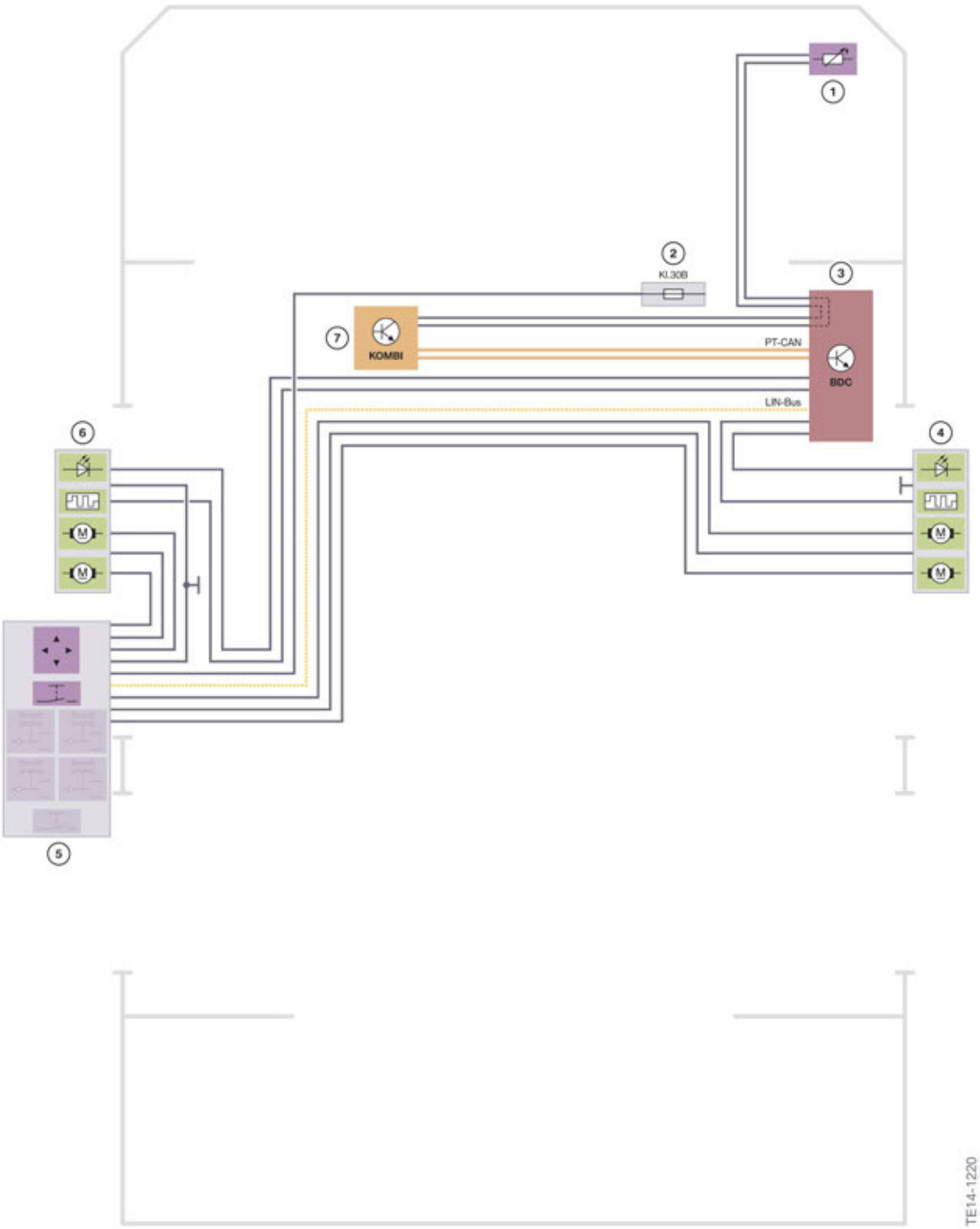

Exterior mirror, basic version

G12 General Vehicle Electronics

11. Exterior Mirrors

Index	Explanation
1	Outside temperature sensor
2	Fuse in the power distribution box, front right
3	Body Domain Controller (BDC)
4	Exterior mirror, front passenger side
5	Switch block, driver's door
6	Exterior mirror, driver's side
7	Instrument cluster (KOMBI)

The electric motors of the exterior mirror are activated directly using the mirror adjustment switch.

G12 General Vehicle Electronics

11. Exterior Mirrors

11.2. Exterior mirror High

11.2.1. System wiring diagram

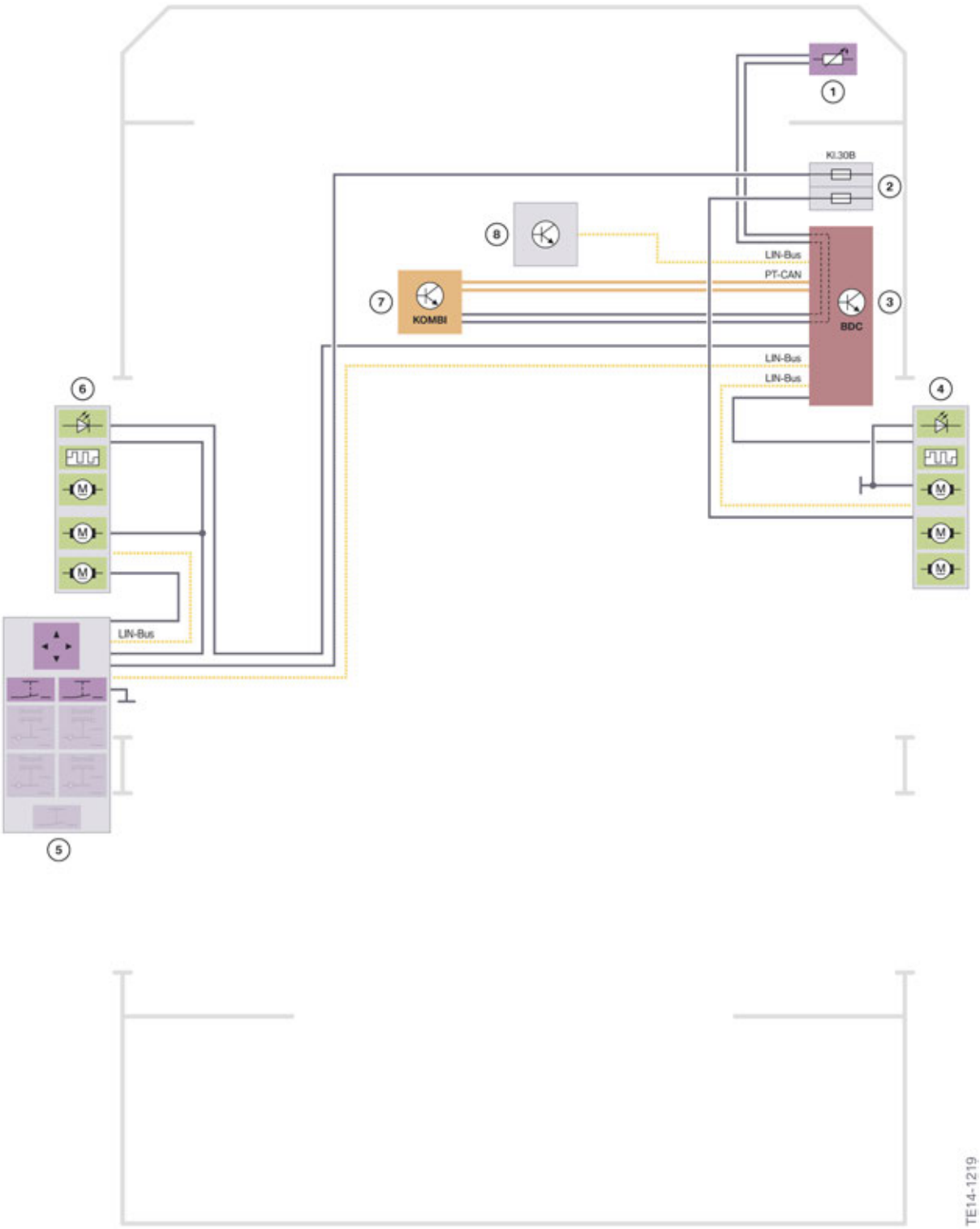

Exterior mirror High

G12 General Vehicle Electronics

11. Exterior Mirrors

Index	Explanation
1	Outside temperature sensor
2	Fuses in the power distribution box, front right
3	Body Domain Controller (BDC)
4	Exterior mirror, front passenger side
5	Switch block, driver's door
6	Exterior mirror, driver's side
7	Instrument cluster (KOMBI)
8	Inside mirror

The instrument cluster receives the value of the ambient temperature from the outside temperature sensor and makes this available via the PT-CAN. The Body Domain Controller evaluates the signal and triggers the activation of the mirror heating via the Local Interconnect Network bus. The control of the heater output is dependent on the ambient temperature and the switch position of the driving experience switch.

The mirror servomotors are activated by the mirror electronics. The request for adjusting the exterior mirror is received by the mirror electronics via the Local Interconnect Network bus.

G12 General Vehicle Electronics

12. Inside Mirror

12.1. System wiring diagram

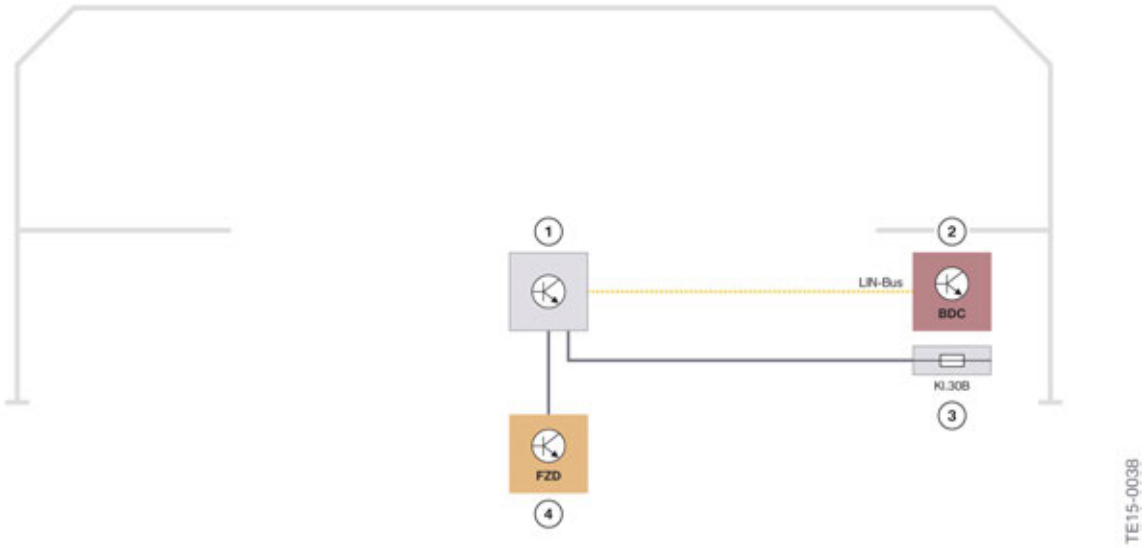

Inside mirror

Index	Explanation
1	Inside mirror
2	Body Domain Controller (BDC)
3	Fuse in the power distribution box, front right
4	Roof function center (FZD)

The interior mirror is connected with the Body Domain Controller via LIN-bus.

The LED for the alarm system is located at the interior mirror.

G12 General Vehicle Electronics

13. Seats

13.1. Front seats

13.1.1. Memory seat, front, driver's side

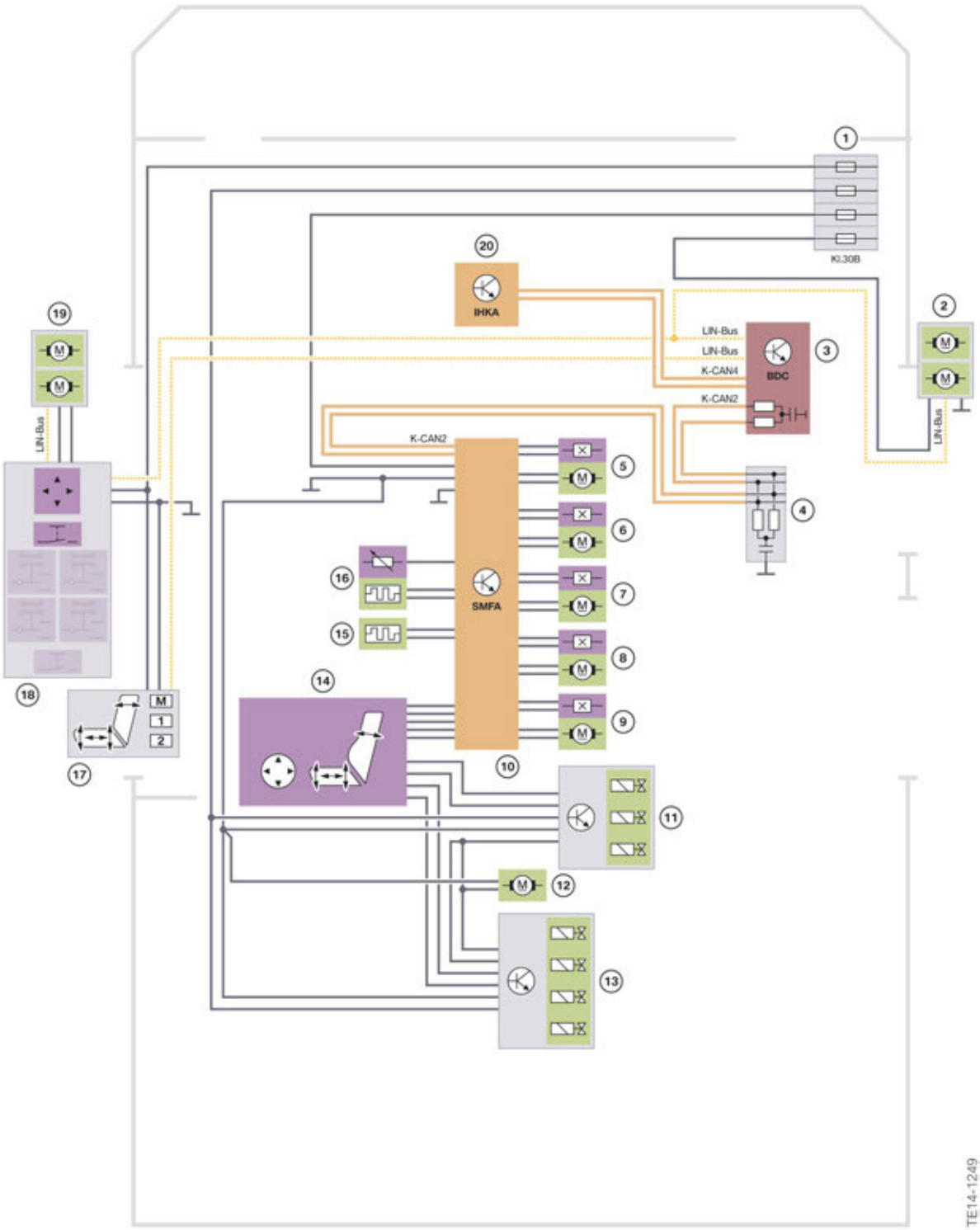

Memory seat, front, driver's side

G12 General Vehicle Electronics

13. Seats

Index	Explanation
1	Fuses in the power distribution box, front right
2	Exterior mirror, front passenger side
3	Body Domain Controller (BDC)
4	CAN terminator
5	Electric motor, forward/back seat adjustment
6	Electric motor, seat angle adjustment
7	Electric motor, seat height adjustment
8	Electric motor, backrest angle adjustment
9	Motor, head restraint height adjustment
10	Driver's seat module (SMFA)
11	Valve block, backrest width adjustment
12	Lumbar support pump
13	Valve block, lumbar support adjustment
14	Switch, seat adjustment
15	Seat heating pad, backrest
16	Seat heating pad, seat surface
17	Memory switch
18	Switch block, driver's door
19	Exterior mirror, driver's side
20	Integrated automatic heating / air conditioning (IHKA)

13.1.2. Memory seat, front, passenger's side

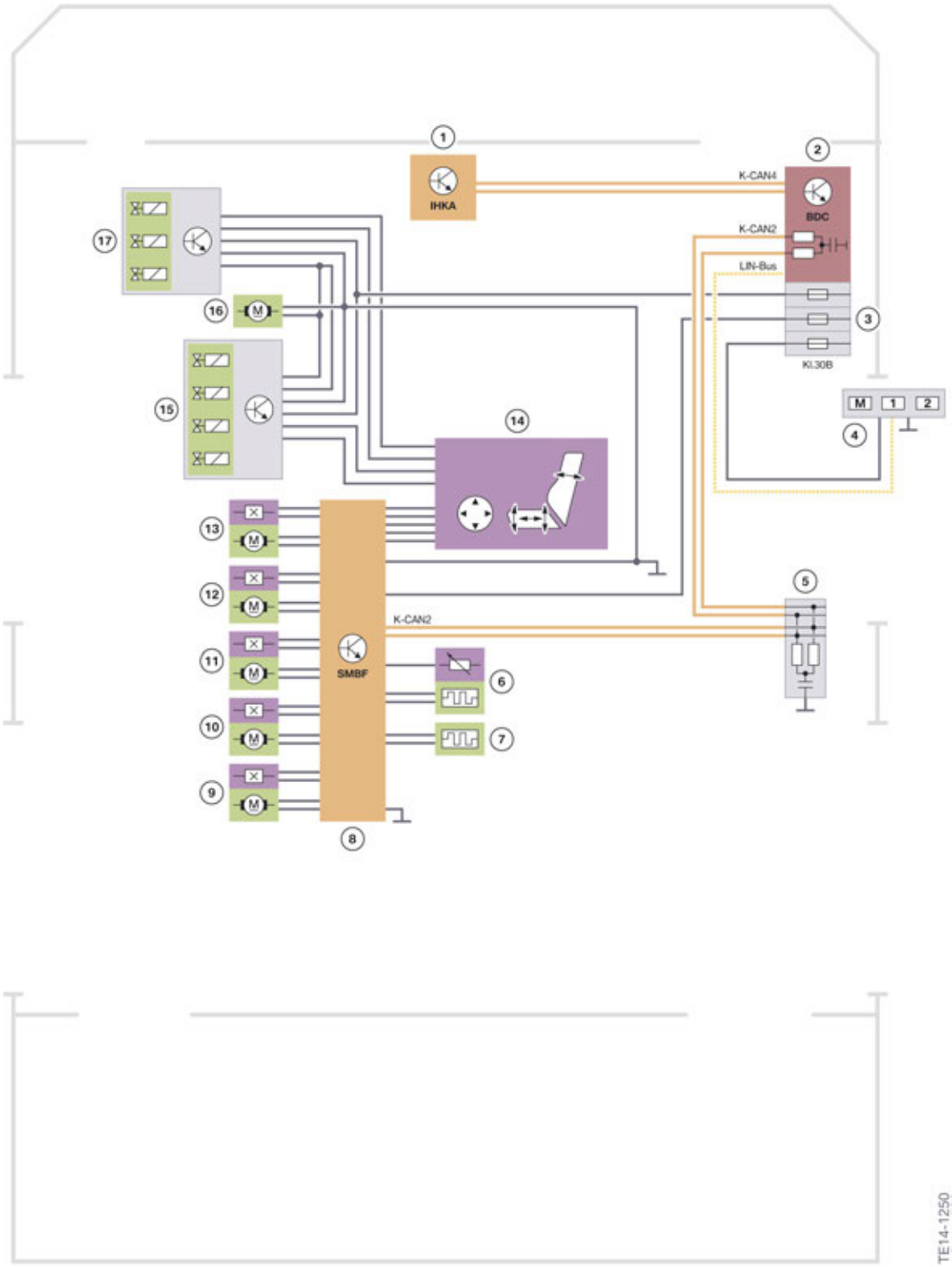

Memory seat, front, passenger's side

G12 General Vehicle Electronics

13. Seats

Index	Explanation
1	Integrated automatic heating / air conditioning (IHKA)
2	Body Domain Controller (BDC)
3	Fuses in the power distribution box, front right
4	Memory switch
5	CAN terminator
6	Seat heating pad, seat surface
7	Seat heating pad, backrest
8	Front passenger seat module, (SMBF)
9	Motor, head restraint height adjustment
10	Electric motor, forward/back seat adjustment
11	Electric motor, seat angle adjustment
12	Electric motor, seat height adjustment
13	Electric motor, backrest angle adjustment
14	Switch, seat adjustment
15	Valve block, lumbar support adjustment
16	Lumbar support pump
17	Valve block, backrest width adjustment

G12 General Vehicle Electronics

13. Seats

13.1.3. Multifunction seat, front, driver's side

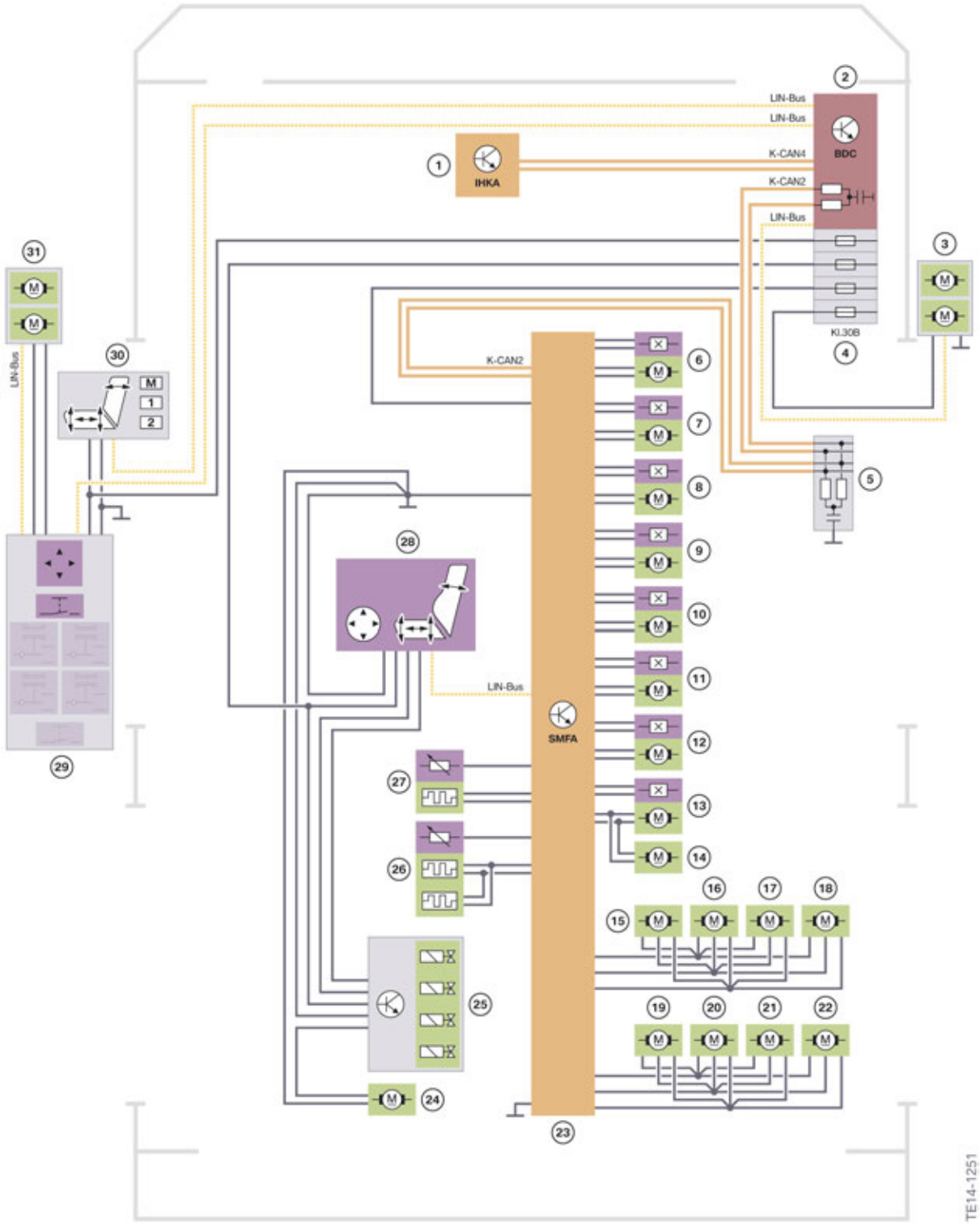

Multifunction seat, front, driver's side

G12 General Vehicle Electronics

13. Seats

Index	Explanation
1	Integrated automatic heating / air conditioning (IHKA)
2	Body Domain Controller (BDC)
3	Exterior mirror, front passenger side
4	Fuses in the power distribution box, front right
5	CAN terminator
6	Electric motor, forward/back seat adjustment
7	Electric motor, seat angle adjustment
8	Electric motor, seat height adjustment
9	Electric motor, backrest angle adjustment
10	Motor, head restraint height adjustment
11	Motor, seat depth adjustment
12	Motor, backrest upper section adjustment
13	Motor, backrest width adjustment
14	Motor, backrest width adjustment
15	Motor, active seat ventilation, seat surface
16	Motor, active seat ventilation, seat surface
17	Motor, active seat ventilation, seat surface
18	Motor, active seat ventilation, seat surface
19	Motor, active seat ventilation, backrest surface
20	Motor, active seat ventilation, backrest surface
21	Motor, active seat ventilation, backrest surface
22	Motor, active seat ventilation, backrest surface
23	Driver's seat module (SMFA)
24	Lumbar support pump
25	Valve block, lumbar support adjustment
26	Seat heating pad, backrest
27	Seat heating pad, seat surface
28	Switch, seat adjustment
29	Switch block, driver's door
30	Memory switch
31	Exterior mirror, driver's side

13.1.4. Multifunction seat, front, passenger's side

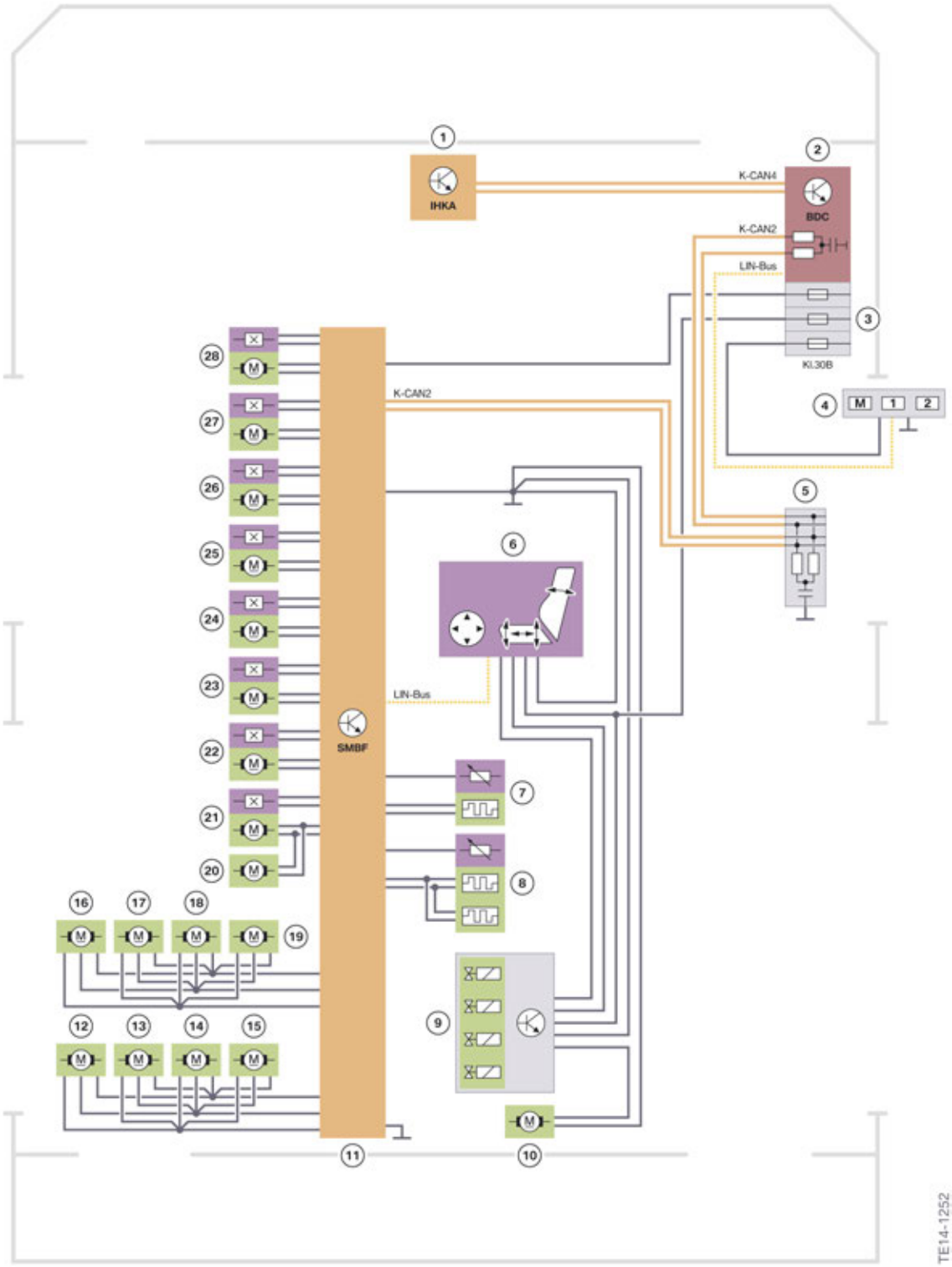

Multifunction seat, front, passenger's side

G12 General Vehicle Electronics

13. Seats

Index	Explanation
1	Integrated automatic heating / air conditioning (IHKA)
2	Body Domain Controller (BDC)
3	Fuses in the power distribution box, front right
4	Memory switch
5	CAN terminator
6	Switch, seat adjustment
7	Seat heating pad, seat surface
8	Seat heating pad, backrest
9	Valve block, lumbar support adjustment
10	Lumbar support pump
11	Front passenger seat module, (SMBF)
12	Motor, active seat ventilation, backrest surface
13	Motor, active seat ventilation, backrest surface
14	Motor, active seat ventilation, backrest surface
15	Motor, active seat ventilation, backrest surface
16	Motor, active seat ventilation, seat surface
17	Motor, active seat ventilation, seat surface
18	Motor, active seat ventilation, seat surface
19	Motor, active seat ventilation, seat surface
20	Motor, backrest width adjustment
21	Motor, backrest width adjustment
22	Motor, backrest upper section adjustment
23	Motor, seat depth adjustment
24	Motor, head restraint height adjustment
25	Electric motor, backrest angle adjustment
26	Electric motor, seat height adjustment
27	Electric motor, seat angle adjustment
28	Electric motor, forward/back seat adjustment

G12 General Vehicle Electronics

13. Seats

13.2. Rear seats

13.2.1. Seat heating, basic seat, rear passenger compartment

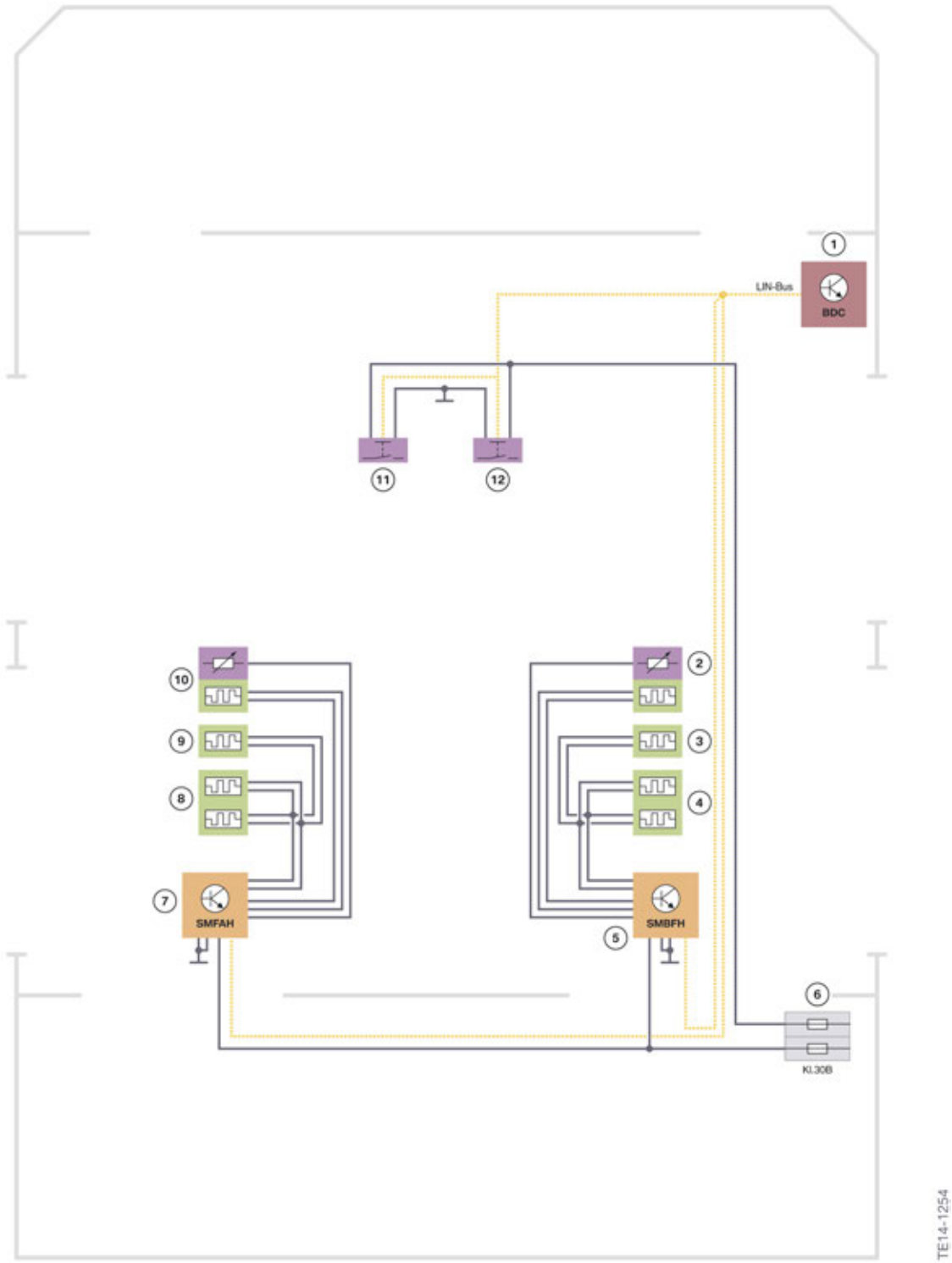

Seat heating, basic seat, rear passenger compartment

G12 General Vehicle Electronics

13. Seats

Index	Explanation
1	Body Domain Controller (BDC)
2	Seat heating pad, seat surface, passenger’s side rear
3	Seat heating pad, backrest, passenger’s side rear (equipment-dependent)
4	Seat heating pad, backrest, passenger’s side rear
5	Seat-heating electronics, rear passenger side
6	Fuse in the rear power distribution box
7	Seat-heating electronics, rear driver's side
8	Seat heating pad, backrest, driver’s side rear
9	Seat heating pad, backrest, driver’s side rear (equipment-dependent)
10	Seat heating pad, seat surface, driver’s side rear
11	Seat-heating switch, rear left
12	Seat-heating switch, rear right

G12 General Vehicle Electronics

13. Seats

13.2.2. Comfort seat, rear passenger compartment, driver's side

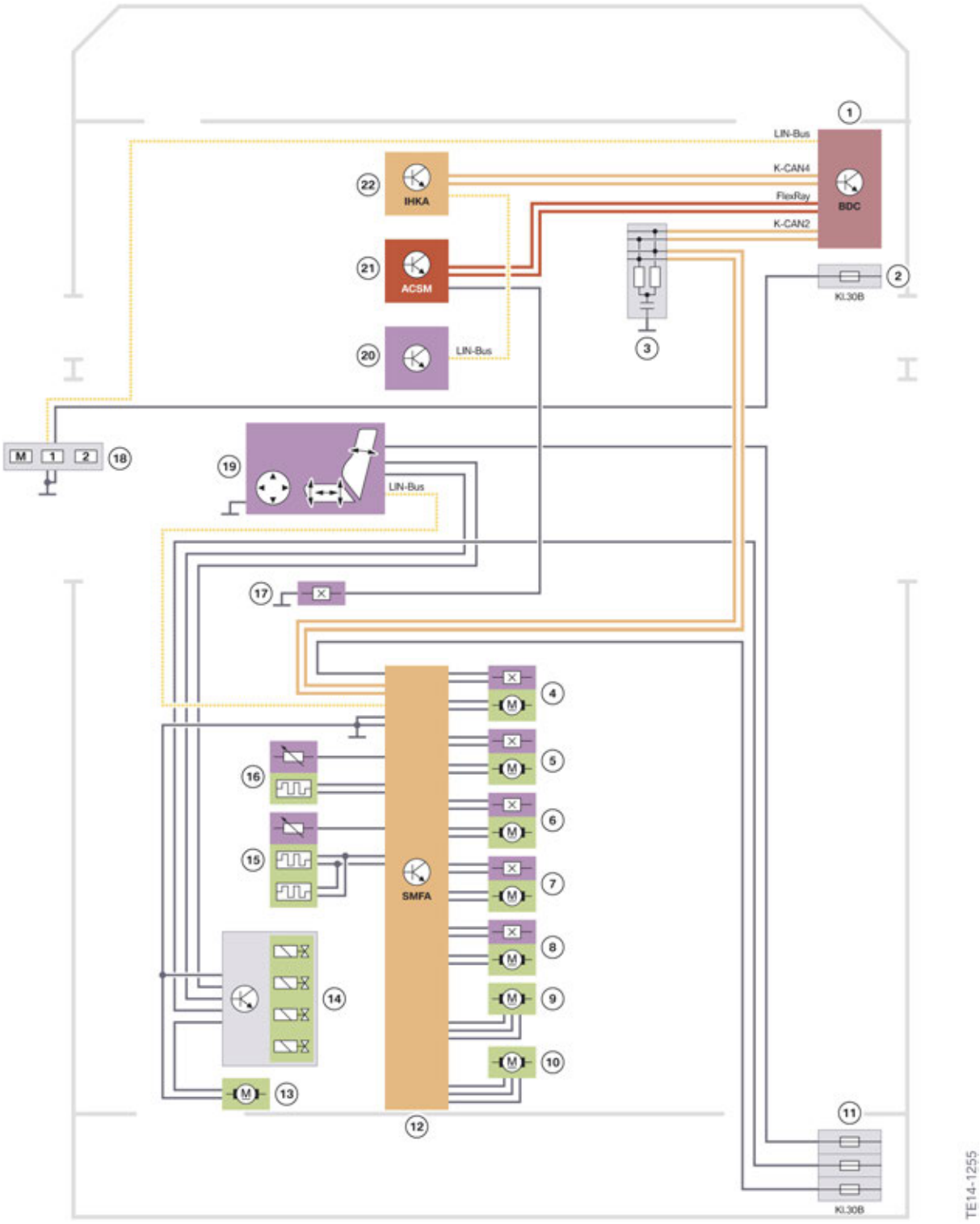

Comfort seat, rear passenger compartment, driver's side

G12 General Vehicle Electronics

13. Seats

Index	Explanation
1	Body Domain Controller (BDC)
2	Fuse in the power distribution box, front right
3	CAN terminator
4	Electric motor, forward/back seat adjustment
5	Electric motor, seat angle adjustment
6	Electric motor, backrest angle adjustment
7	Motor, backrest upper section adjustment
8	Motor, head restraint height adjustment
9	Motor, backrest width adjustment
10	Motor, backrest width adjustment
11	Fuses in the rear power distribution box
12	Driver's seat module, rear (SMFAH)
13	Lumbar support pump
14	Valve block, lumbar support adjustment
15	Seat heating pad, backrest
16	Seat heating pad, seat surface
17	Seat belt buckle contact, driver’s side rear
18	Memory switch
19	Switch, seat adjustment
20	Automatic rear air-conditioning system (FKA)
21	Advanced Crash Safety Module (ACSM)
22	Integrated automatic heating / air conditioning (IHKA)

G12 General Vehicle Electronics

13. Seats

13.2.3. Comfort seat, rear passenger compartment, passenger's side

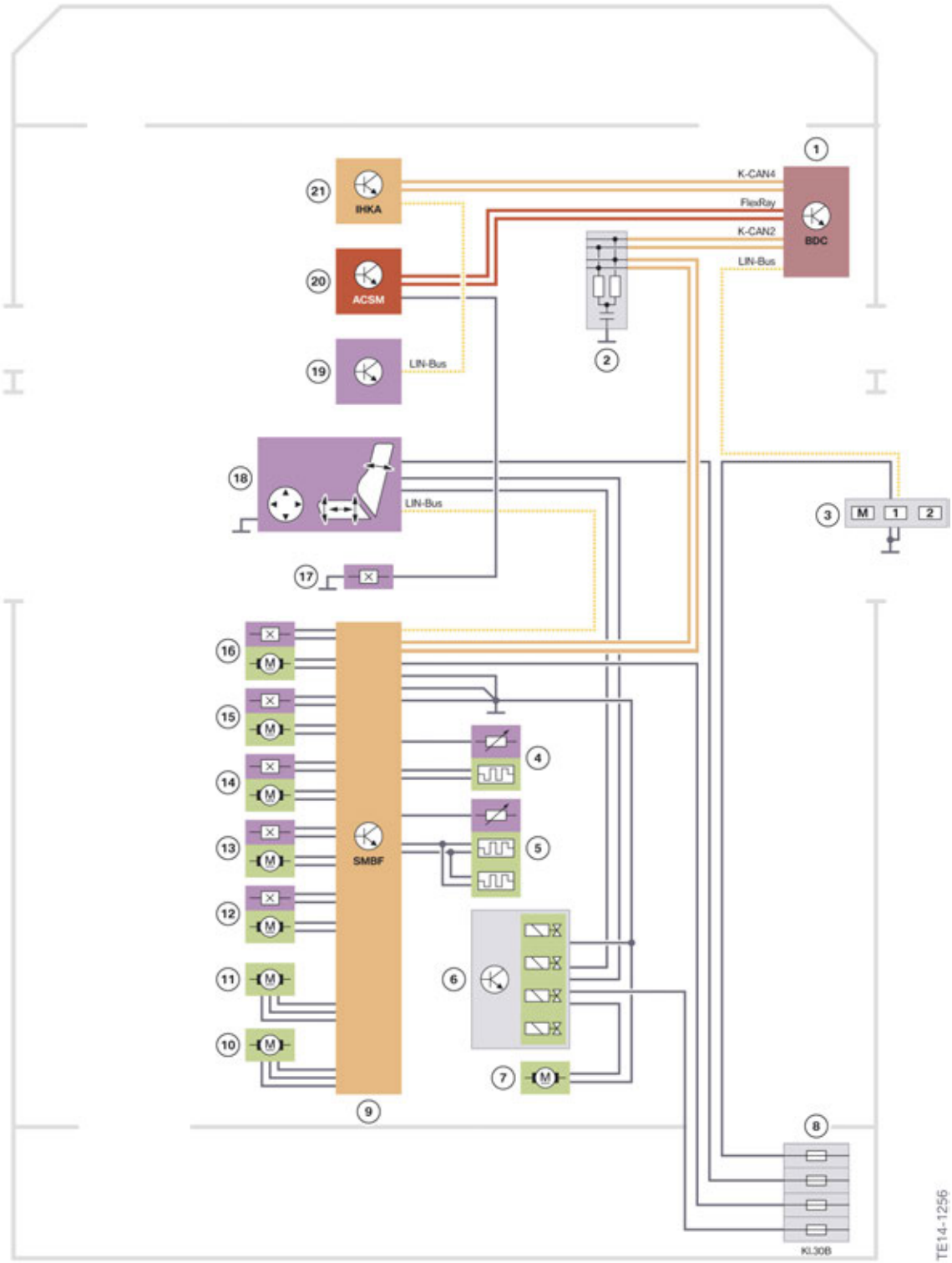

Comfort seat, rear passenger compartment, passenger's side

Index	Explanation
1	Body Domain Controller (BDC)
2	CAN terminator
3	Memory switch
4	Seat heating pad, seat surface
5	Seat heating pad, backrest
6	Valve block, lumbar support adjustment
7	Lumbar support pump
8	Fuses in the rear power distribution box
9	Front passenger seat module, rear (SMBFH)
10	Motor, backrest width adjustment
11	Motor, backrest width adjustment
12	Motor, head restraint height adjustment
13	Motor, backrest upper section adjustment
14	Electric motor, backrest angle adjustment
15	Electric motor, seat angle adjustment
16	Electric motor, forward/back seat adjustment
17	Seat belt buckle contact, passenger’s side rear
18	Switch, seat adjustment
19	Automatic rear air-conditioning system (FKA)
20	Advanced Crash Safety Module (ACSM)
21	Integrated automatic heating / air conditioning (IHKA)

13.3. Captain's Chair

The captain's chair has an extended adjustment range in forward direction for the forward/back seat adjustment, a maximized backrest angle, a folding head restraint as well as an integrated footrest in the front passenger seat. The all-round visibility and leg room achieved provides enhanced travel quality for the passenger in the right rear seat (optional equipment — Rear Executive Lounge Seating (SA ZRE)). No lumbar adjustment, massage function or backrest width adjustment are possible for the captain's chair.

The front passenger seat can also be adjusted by means of the seat adjustment controls in the rear passenger compartment.

G12 General Vehicle Electronics

13. Seats

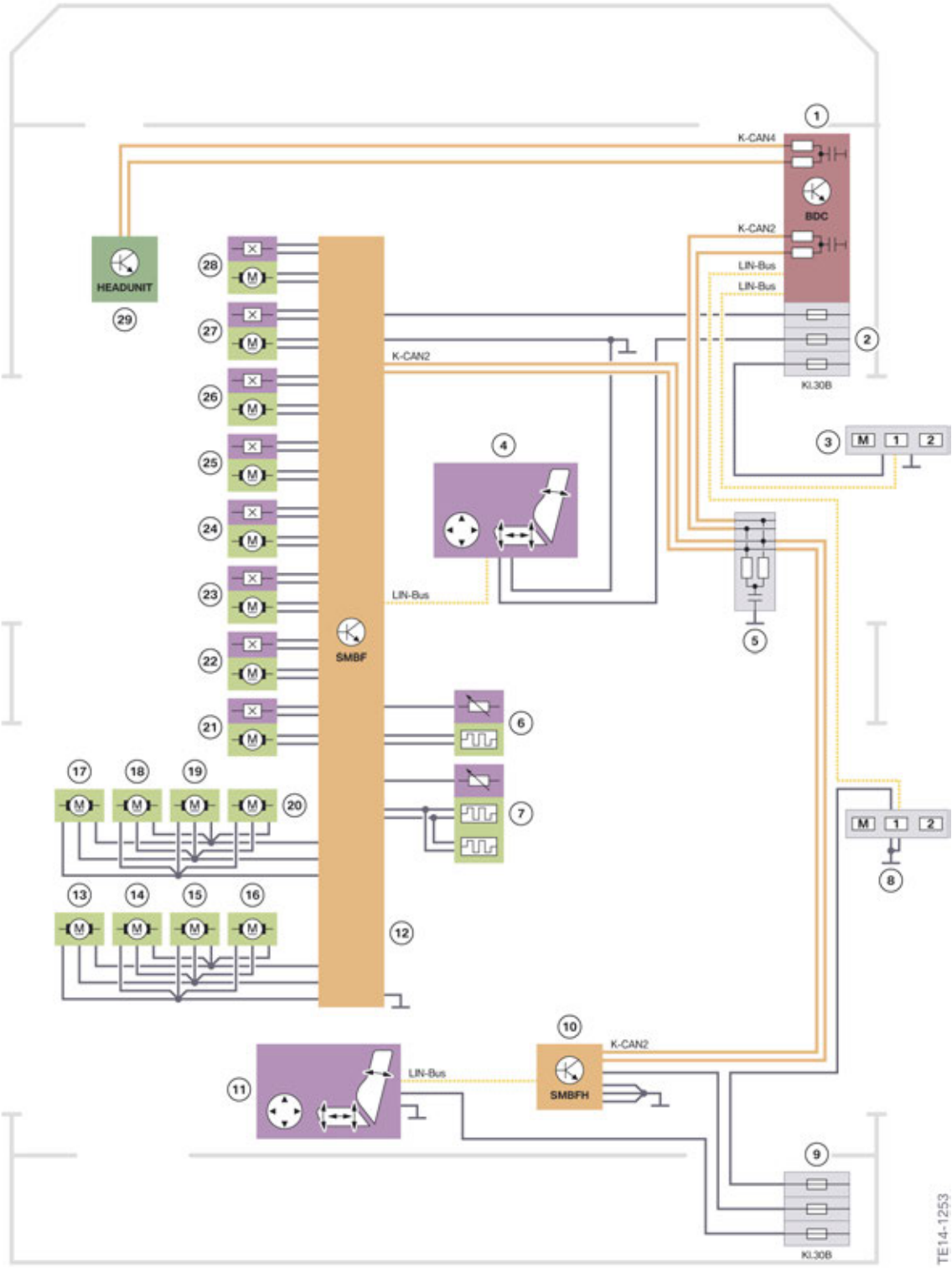

Captain's Chair

G12 General Vehicle Electronics

13. Seats

Index	Explanation
1	Body Domain Controller (BDC)
2	Fuses in the power distribution box, front right
3	Memory seat, front passenger's side
4	Switch, seat adjustment, passenger's side
5	CAN terminator
6	Seat heating pad, seat surface
7	Seat heating pad, backrest
8	Memory seat, passenger's side rear
9	Fuses in the rear power distribution box
10	Front passenger seat module, rear (SMBFH)
11	Switch, seat adjustment, passenger's side rear
12	Front passenger seat module, (SMBF)
13	Motor, active seat ventilation, backrest surface
14	Motor, active seat ventilation, backrest surface
15	Motor, active seat ventilation, backrest surface
16	Motor, active seat ventilation, backrest surface
17	Motor, active seat ventilation, seat surface
18	Motor, active seat ventilation, seat surface
19	Motor, active seat ventilation, seat surface
20	Motor, active seat ventilation, seat surface
21	Motor for monitor angle adjustment
22	Motor for footrest adjustment
23	Motor for head restraint adjustment
24	Motor, seat depth adjustment
25	Electric motor, backrest angle adjustment
26	Electric motor, seat height adjustment
27	Electric motor, seat angle adjustment
28	Electric motor, forward/back seat adjustment
29	Head unit

13.4. Massage

8 different massage functions in the backrest and seat cushion are available to activate or relax muscles. This allows the back muscles to be relaxed and the strain on the spinal discs to be relieved. The 8 programs are divided into 3 categories:

- Mobilization
- Relaxation
- Vitalization

In the case of mobilization, the strain on the spine is relieved by targeted body movements.

In the relaxation program, the muscles are relaxed by massage.

The vitalization program is made up of both mobilization and relaxation. The combination of movement and massage ensures relaxation and recuperation, particularly on long journeys.

G12 General Vehicle Electronics

13. Seats

13.4.1. Seat massage, both front seats

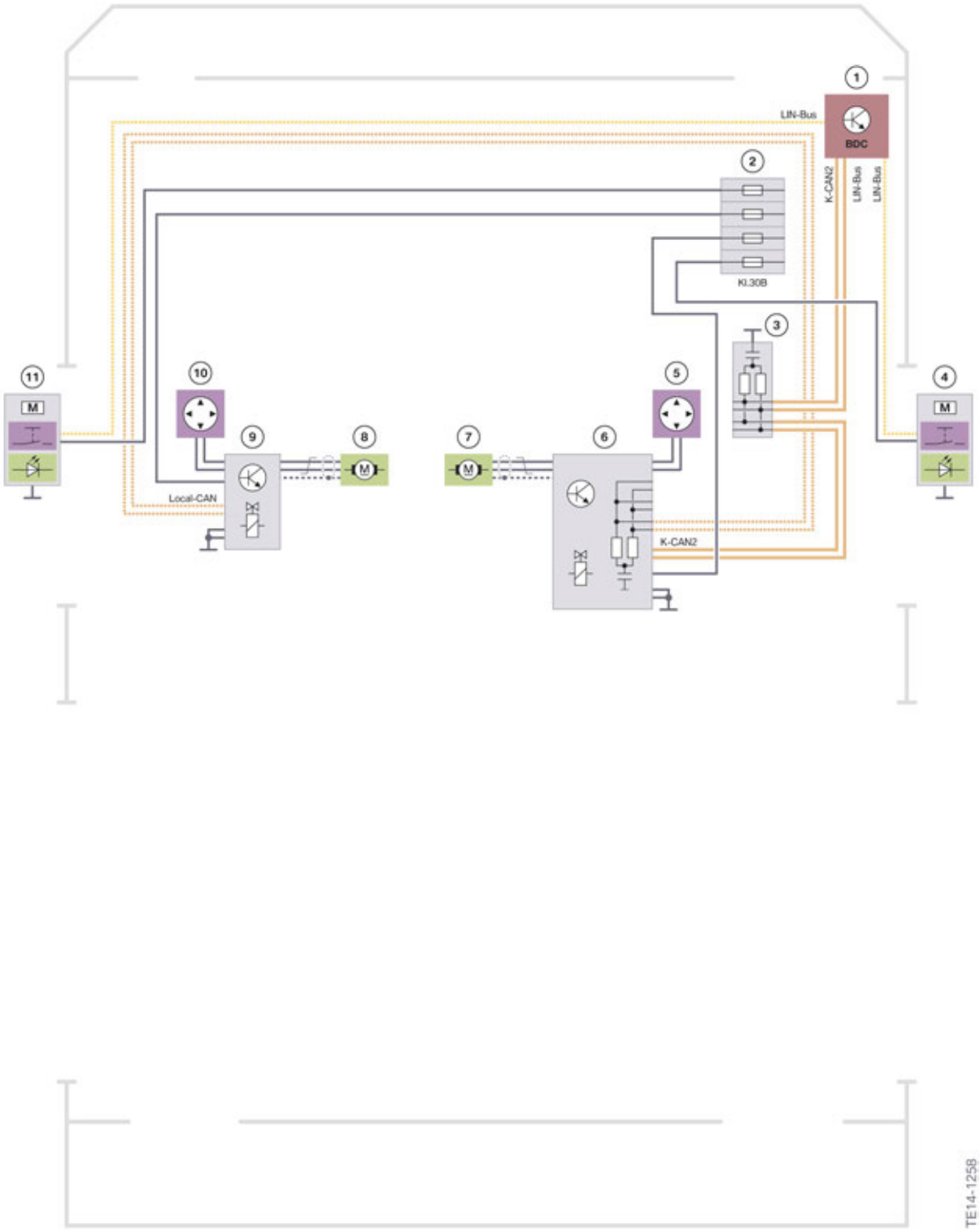

Seat massage, both front seats

G12 General Vehicle Electronics

13. Seats

Index	Explanation
1	Body Domain Controller (BDC)
2	Fuse in the power distribution box, front right
3	CAN terminator
4	Switch block, front passenger door
5	Switch, lumbar support, front passenger seat
6	Seat pneumatics module front right
7	Lumbar support pump, front passenger seat
8	Lumbar support pump, driver's seat
9	Seat pneumatics module front left
10	Switch, lumbar support, driver's seat
11	Switch block, driver's door

G12 General Vehicle Electronics

13. Seats

13.4.2. Seat massage, rear passenger compartment, and massage, front

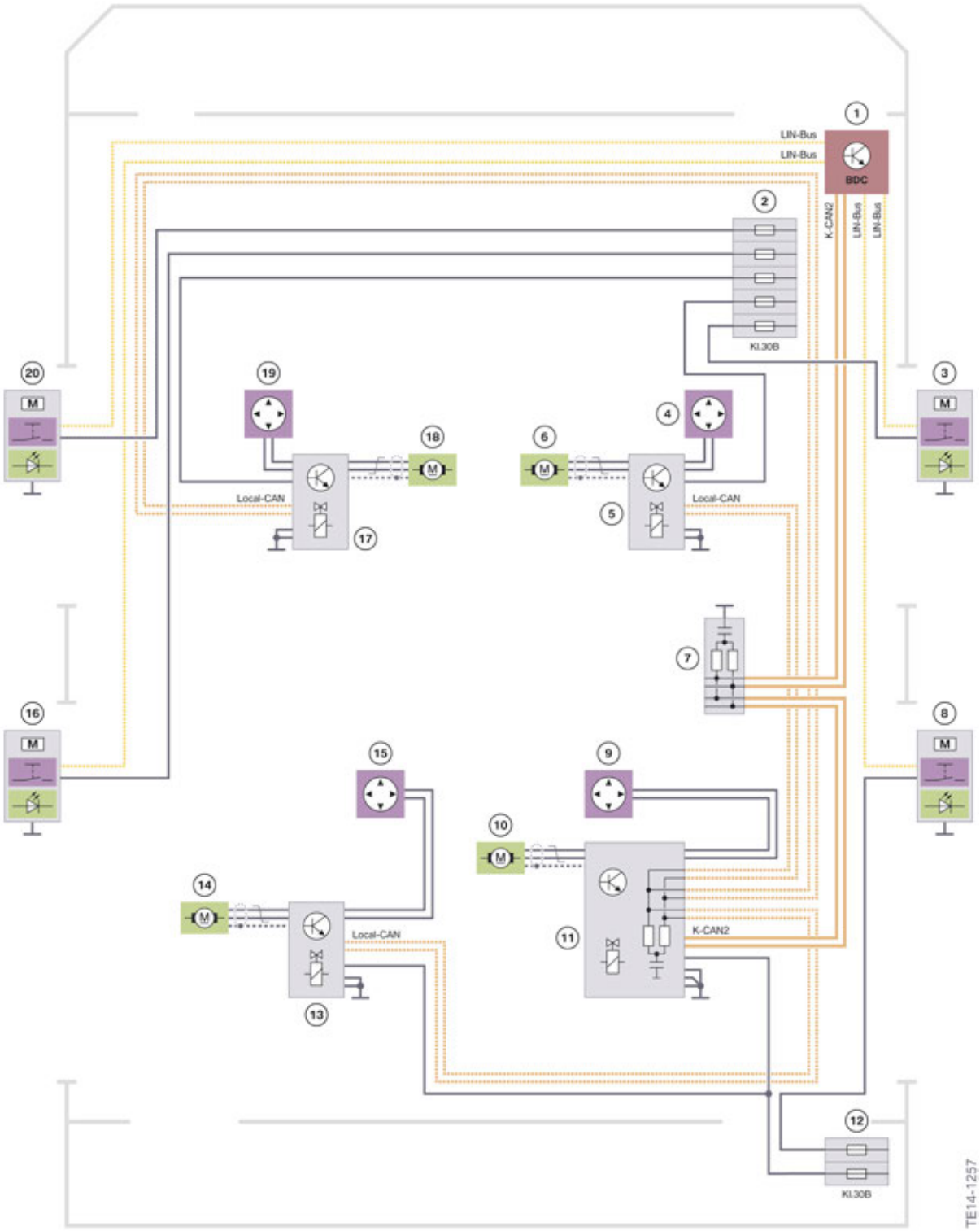

Seat massage, rear passenger compartment, and massage, front

Index	Explanation
1	Body Domain Controller (BDC)
2	Fuse in the power distribution box, front right
3	Switch block, front passenger door
4	Switch, lumbar support, front passenger seat
5	Seat pneumatics module front right
6	Lumbar support pump, front passenger seat
7	CAN terminator
8	Switch block, rear passenger door
9	Switch, lumbar support, rear passenger seat
10	Lumbar support pump, rear passenger seat
11	Seat pneumatics module back right
12	Fuses in the rear power distribution box
13	Seat pneumatics module back left
14	Lumbar support pump, rear driver's-side seat
15	Switch, lumbar support, rear driver's-side seat
16	Switch block, rear driver's-side door
17	Switch, lumbar support, driver's seat
18	Lumbar support pump, driver's seat
19	Switch, lumbar support, driver's seat
20	Switch block, driver's door

13.5. Heated armrests

The armrest heating is also switched by means of the seat-heating switch.

The heating can be controlled individually for each seat by means of the controller.

G12 General Vehicle Electronics

13. Seats

13.5.1. System wiring diagram

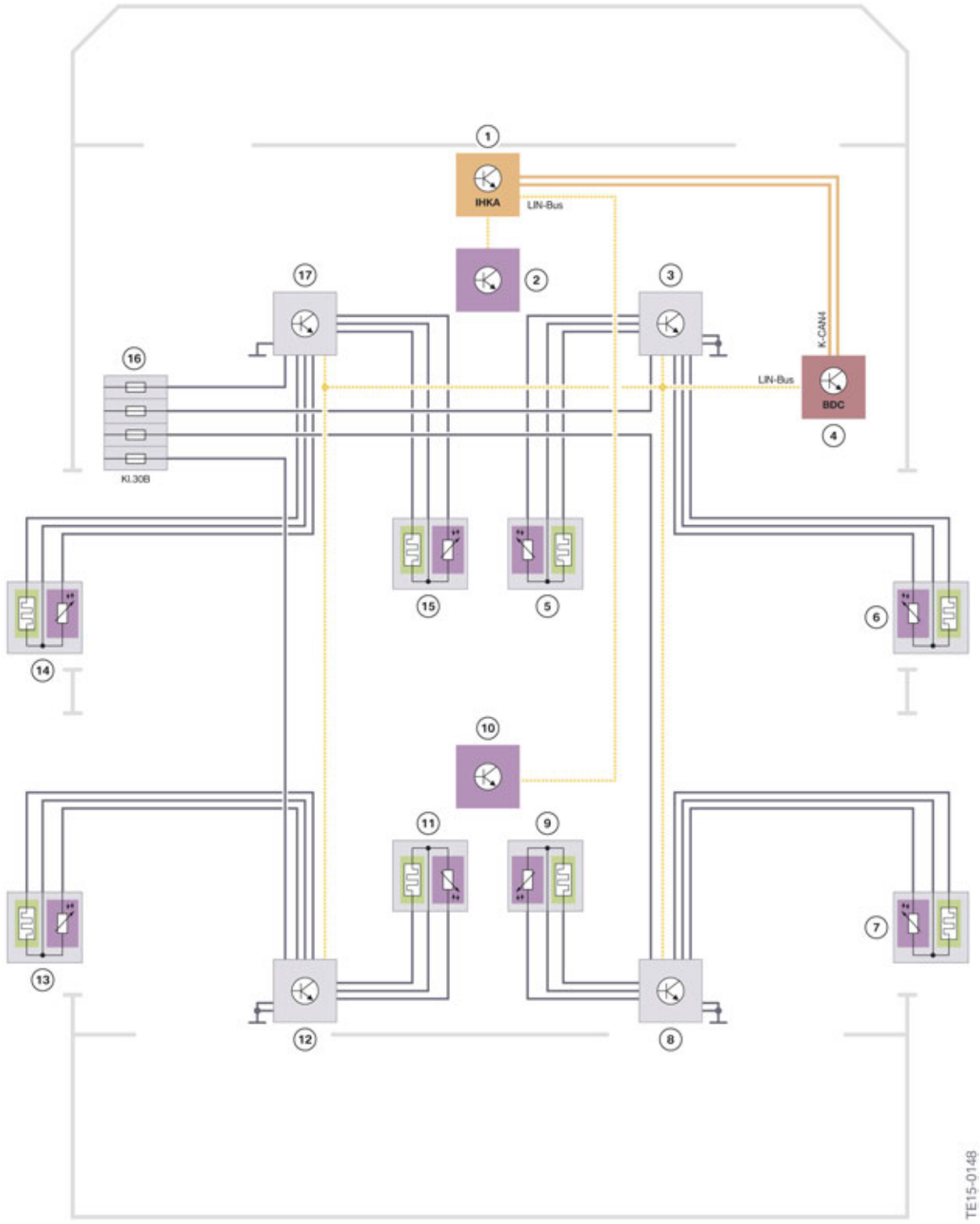

Heated armrests

Index	Explanation
1	Integrated automatic heating / air conditioning
2	Operating unit, air conditioning
3	Control unit for armrest heating, passenger's side
4	Body Domain Controller (BDC)
5	Armrest heating, center console, passenger's side
6	Armrest heating in front passenger door
7	Armrest heating in rear passenger door
8	Control unit for armrest heating, rear passenger's side
9	Armrest heating, center console, rear passenger's side
10	Operating unit for air conditioning, rear passenger compartment, or switch block, rear passenger compartment (equipment-dependent)
11	Armrest heating, center console, rear driver's side
12	Control unit for armrest heating, rear driver's side
13	Armrest heating in rear driver's-side door
14	Armrest heating in driver's door
15	Armrest heating, center console, driver's side
16	Fuses in the power distribution box, front left
17	Control unit for armrest heating, driver's side

13.6. BMW Vitality Program

For the first time at BMW, there is active interaction of the rear seat passenger with the rear seat.

This function allows the customer to relax in a sitting position on long journeys and to regenerate the spinal discs by active movements. The training can be started via Touch Command or with the remote control of the Rear Seat Entertainment. A calibration run is performed for individual adaptation to the occupants. An animation on the rear compartment display shows which movement should be performed. Sensors in the backrest measure the applied pressure, which is displayed on the rear compartment display. The customer is thus given feedback and can respond to this. The training success is displayed at the end of each exercise.

The following optional equipment is required for the BMW Vitality Program:

- Massage, rear passenger compartment (SA 4T6)
- Rear Seat Entertainment (SA 6FR)

G12 General Vehicle Electronics

14. Horn

14.1. System wiring diagram

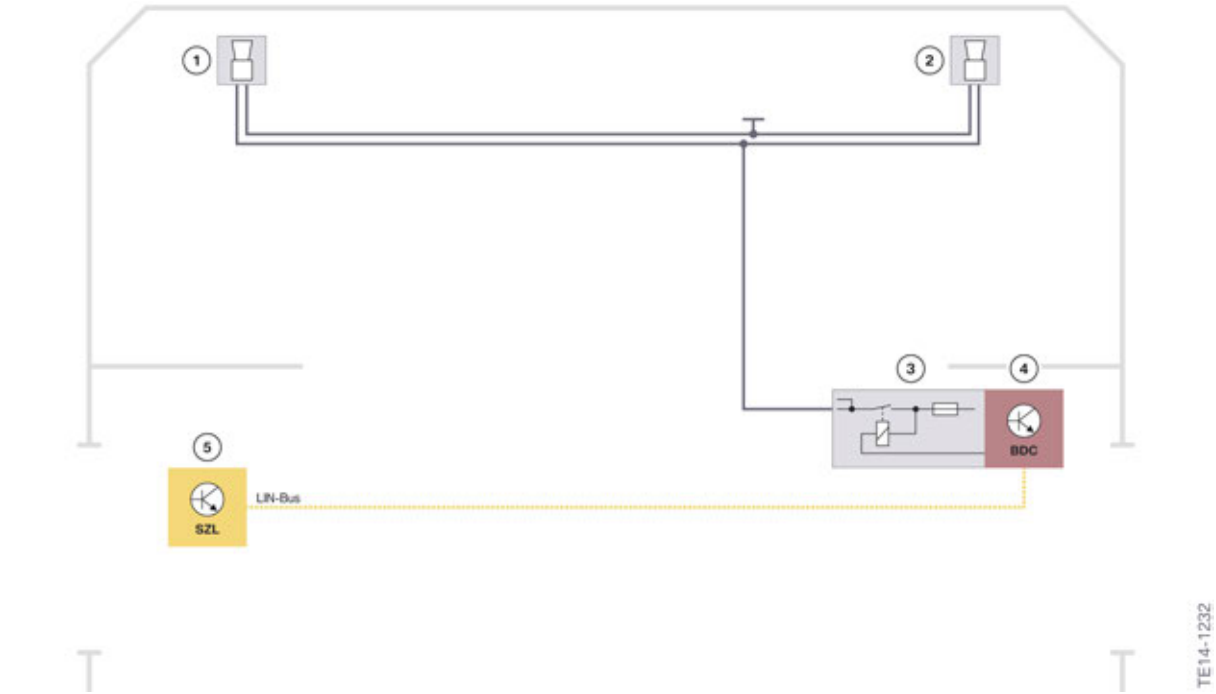

Horns

Index	Explanation
1	Horn, left
2	Horn, right
3	Relay in the Body Domain Controller
4	Body Domain Controller (BDC)

Signal path of horn:

- The horn button is read in by the steering column switch cluster (SZL).
- The SZL sends the information via the Local Interconnect Network bus to the Body Domain Controller.
- The Body Domain Controller evaluates the information and activates the relay for the horn.

Bayerische Motorenwerke Aktiengesellschaft
Qualifizierung und Training
Röntgenstraße 7
85716 Unterschleißheim, Germany

Technical training.
Product information.

G12 Driver Assistance Systems

Edited for the U.S. market by:
BMW Group University
Technical Training
ST1501 12/1/2016

BMW Service

General information

Symbols used

The following symbol is used in this document to facilitate better comprehension or to draw attention to very important information:

⚠

Contains important safety information and information that needs to be observed strictly in order to guarantee the smooth operation of the system.

Information status and national-market versions

BMW Group vehicles meet the requirements of the highest safety and quality standards. Changes in requirements for environmental protection, customer benefits and design render necessary continuous development of systems and components. Consequently, there may be discrepancies between the contents of this document and the vehicles available in the training course.

This document basically relates to the European version of left hand drive vehicles. Some operating elements or components are arranged differently in right-hand drive vehicles than shown in the graphics in this document. Further differences may arise as the result of the equipment specification in specific markets or countries.

Additional sources of information

Further information on the individual topics can be found in the following:

- Owner's Handbook
- Integrated Service Technical Application.

Contact: conceptinfo@bmw.de

©2015 BMW AG, Munich

Reprints of this publication or its parts require the written approval of BMW AG, Munich.

The information contained in this document forms an integral part of the technical training of the BMW Group and is intended for the trainer and participants in the seminar. Refer to the latest relevant information systems of the BMW Group for any changes/additions to the technical data.

Information status: **June 2015**
Technical training.

G12 Driver Assistance Systems

Contents

1. Introduction **1**

2. G12 Bus Overview **2**

3. KAFAS **5**
- 3.1. Detection range 7
- 3.2. Person recognition 8
- 3.3. Road Sign Recognition 8
- 3.4. Lane detection 9
- 3.5. Detection of the road condition 10
- 3.6. Limits of the system 11

4. Optional Equipment System **12**

5. Overview Of Sensors **13**

6. Intelligent Safety **15**
- 6.1. Overview of the configuration menu 17

7. Collision Warning **20**
- 7.1. Functional principle 20
  - 7.1.1. Frontal Collision Warning with City Collision Mitigation 21
  - 7.1.2. Daytime Pedestrian Protection 22
- 7.2. Warning and braking function 22
  - 7.2.1. Displays 23
  - 7.2.2. Early warning 23
  - 7.2.3. Acute warning 24
  - 7.2.4. Brake intervention 24
- 7.3. Operation 26
- 7.4. Limits of the system 28

8. Lane Departure Warning **29**
- 8.1. Active steering intervention 31
- 8.2. System wiring diagram 33
- 8.3. Deactivation criteria 35
- 8.4. Limits of the system 35

9. Blind Spot Detection **36**
- 9.1. Active steering intervention 38
- 9.2. System wiring diagram 40
- 9.3. Limits of the system 41

10. Side Collision Avoidance **42**

G12 Driver Assistance Systems

Contents

10.1. Limits of the system 45

11. Road Sign Recognition 46
11.1. Operation 47
11.2. Limits of the system 47

12. Proactive Driving Assistant 49
12.1. Operation 52
12.2. Limits of the system 53

13. Alertness Assistant 54
13.1. Operation 54
13.2. Limits of the system 56

14. Night Vision 57
14.1. System wiring diagram 62
14.2. Operation 64
14.3. Limits of the system 65

15. Cameras 66
15.1. Surround view 66
15.1.1. Automatic camera angle 67
15.1.2. Side view 67
15.1.3. Front camera 67
15.1.4. Panorama View 68
15.1.5. Reversing camera 72
15.1.6. Moving camera angle 72
15.2. Overview of exterior camera operating menu 74
15.3. Assistant function 77
15.3.1. Car wash view 77
15.3.2. Side protection 78
15.3.3. Door opening angle 79
15.4. System components 80
15.4.1. Reversing camera 81
15.4.2. TRSVC control unit 82
15.5. System wiring diagram 82

16. Park Distance Control 85
16.1. System components 85
16.2. Auto PDC 86
16.3. Active Park Distance Control 88
16.4. Side protection 88

G12 Driver Assistance Systems

Contents

16.5. Operation ... 89
16.5.1. Auto PDC ... 90
16.5.2. Active Park Distance Control ... 91
16.5.3. Acoustic signal output ... 92
16.6. Deactivation criteria ... 93
16.7. Limits of the system ... 93

17. Remote Control Parking ... 94
17.1. Introduction ... 94
17.1.1. Scope of functions ... 94
17.1.2. Requirements of parking spaces ... 96
17.2. Park procedure ... 98
17.2.1. BMW display key ... 98
17.2.2. Activation ... 100
17.2.3. Parking ... 101
17.2.4. Pulling out of a parking space ... 103
17.2.5. Braking due to objects ... 103
17.2.6. Cut-off events ... 104
17.3. System overview ... 105
17.3.1. Limits of the system ... 108

18. Cross Traffic Alert ... 109
18.1. Functional principle ... 109
18.2. Cross Traffic Alert Rear ... 110
18.3. Cross Traffic Alert Front ... 110
18.4. Displays ... 111
18.5. Operation ... 113
18.6. Limits of the system ... 114

19. Parking Maneuver Assistant ... 115
19.1. System components ... 115
19.2. System wiring diagram ... 117
19.3. Control unit ... 120
19.4. Functional principle ... 120
19.5. Functional prerequisites ... 121
19.5.1. Measuring parking spaces ... 121
19.5.2. Suitable parking spaces parallel to the roadway (parallel parking) ... 123
19.5.3. Suitable parking spaces perpendicular to the roadway (bay parking) ... 124
19.5.4. Detection of a universal parking space ... 127

G12 Driver Assistance Systems

Contents

19.6. Side protection ... 128
19.7. Operation ... 129
19.7.1. Parking procedure (parallel parking) ... 130
19.7.2. Parking procedure (bay parking) ... 132
19.7.3. Deactivation criteria ... 134
19.8. Limits of the system ... 134

20. Cruise Control ... 136
20.1. Introduction ... 136
20.2. Cruise control with braking function ... 136
20.2.1. Control functions ... 136
20.2.2. Activation of the actuators ... 138
20.2.3. Operation ... 138
20.3. Active Cruise Control with Stop&Go function ... 140
20.3.1. Control functions ... 143
20.3.2. Operation ... 144
20.3.3. System wiring diagram ... 149

21. Speed Limit Warning ... 151
21.1. Operation ... 151

22. Lateral Guidance Assistants ... 152

23. Lane Keeping & Traffic Jam Assistants ... 153
23.1. Functional principle ... 153
23.1.1. Hands-off-Detection ... 155
23.1.2. Functional prerequisites ... 158
23.1.3. Lane change ... 158
23.1.4. Function logic ... 158
23.1.5. Steering interventions ... 159
23.1.6. Operation ... 160
23.1.7. System wiring diagram ... 162
23.1.8. Deactivation criteria ... 164
23.1.9. Limits of the system ... 164

24. Active Lane Keeping Assistant ... 165
24.1. Side Collision Avoidance ... 165
24.1.1. Reduced Side Collision Avoidance ... 166
24.2. Lane Departure Warning ... 167
24.3. Blind Spot Detection ... 168

G12 Driver Assistance Systems

1. Introduction

The range of existing assistance systems has been expanded in the G12 to include new innovative systems. The interplay between the varied and intelligent assistance systems supports the driver in every respect; from making driving more comfortable to providing the reassuring feeling of safety on all roads.

The assistance systems help to make the driver's life easier by:

- Providing the driver with information
- Prompting the driver with suggestions
- Automatically intervening in the driving process

This information bulletin contains an overview of all the assistance systems used in the G12:

- Camera-based collision warning
- Frontal Collision Warning with City Collision Mitigation
- Daytime Pedestrian Protection
- Road Sign Recognition
- Proactive Driving Assistant
- Lane Departure Warning
- Blind Spot Detection
- Side Collision Avoidance
- Alertness assistant
- Night vision
- Camera systems
- Cross Traffic Alert
- Park Distance Control
- Parking Maneuver Assistant
- Speed control
- Speed limit warning
- Traffic Jam Assistant
- Active Lane Keeping Assistant with Side Collision Avoidance

Identifying road users driving ahead as well as detecting objects and lane edges are among the most important prerequisites for the assistance systems. This applies not only for the far range but also the close range.

The optional functions available for the G12 are implemented either as camera-based systems with a shared camera and integrated control unit, or as sensor systems such as ultrasonic or radar sensors. Evaluation signals provided by various control units (for example, from the Advanced Crash Safety Module (ACSM)) are also taken into consideration.

For more information on the operating concept of the assistance systems, please refer to the Owner's Handbook.

G12 Driver Assistance Systems

2. G12 Bus Overview

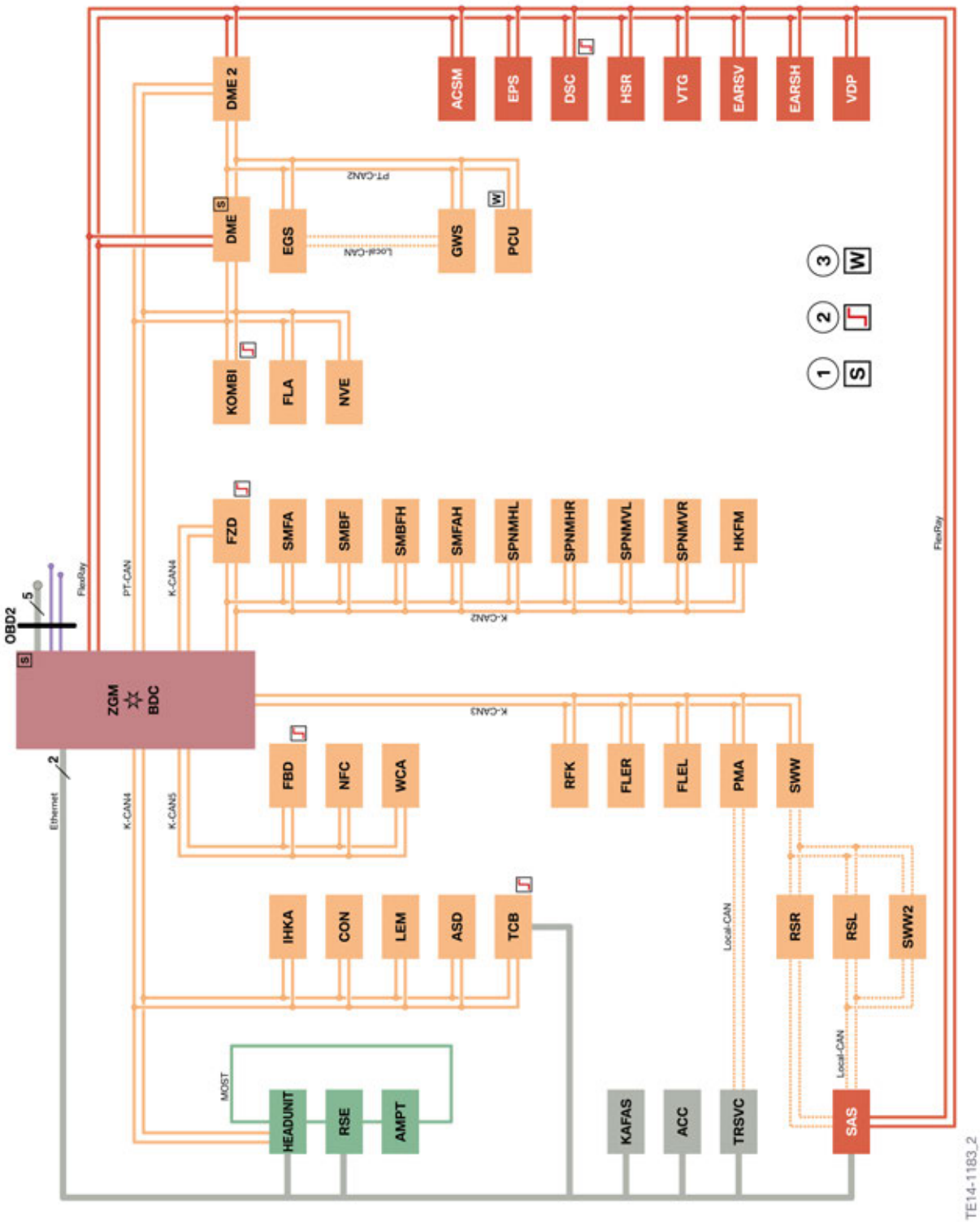

G12 Bus overview

G12 Driver Assistance Systems

2. G12 Bus Overview

Index	Explanation
ACC	Active Cruise Control
ACSM	Advanced Crash Safety Module
AMPT	Top Hi-Fi amplifier
ASD	Active Sound Design
BDC	Body Domain Controller
CON	Controller
DME	Digital Motor Electronics
DME2	Digital Engine Electronics 2
DSC	Dynamic Stability Control
EARSH	Electric active roll stabilization rear
EARSV	Electric active roll stabilization front
EGS	Electronic transmission control
EPS	Electromechanical Power Steering
FLA	High-beam assistant
FLER	Frontal Light Electronics Right
FLEL	Frontal Light Electronics Left
FZD	Roof function Center
GWS	Gear selector
HEADUNIT	Head unit
HKFM	Tailgate function module
HSR	Rear axle slip angle control
IHKA	Integrated automatic heating / air conditioning
KAFAS	Camera-based driver support systems
KOMBI	Instrument panel
LEM	Light effect manager
NFC	Near Field Communication
NVE	Night Vision Electronics
PCU	Power Control Unit
PMA	Parking Maneuver Assistant
RFK	Reversing camera
RSE	Rear Seat Entertainment
RSL	Radar sensor, left
RSR	Radar sensor, right
SAS	Optional equipment system
SMBF	Seat module, passenger

G12 Driver Assistance Systems

2. G12 Bus Overview

Index	Explanation
SMBFH	Seat module, passenger, rear
SMFA	Seat module, driver
SMFAH	Seat module, driver, rear
SPNMHL	Seat pneumatics module back left
SPNMHR	Seat pneumatics module back right
SPNMVL	Seat pneumatics module front left
SPNMVR	Seat pneumatics module front right
SWW	Blind Spot Detection (primary)
SWW2	Blind Spot Detection (secondary)
TCB	Telematic Communication Box
TRSVC	Top Rear Side View Camera
VDP	Vertical dynamic platform
VTG	Transfer box
WCA	Wireless charging oddments tray
ZGM	Central gateway module
1	Start-up node control units for starting and synchronizing the FlexRay bus system
2	Control units with wake-up authorization
3	Control units also connected at terminal 15WUP

G12 Driver Assistance Systems

3. KAFAS

As the requirements placed on the KAFAS camera have increased in the G12, the existing monochrome camera has been replaced by a stereo camera.

KAFAS stereo camera

The KAFAS stereo camera is composed of two high-resolution CMOS monochrome cameras, which are installed in a housing with approximately 20 cm between them. The KAFAS stereo camera housing now also serves as an equipment holder for the KAFAS control unit, which has more powerful processors.

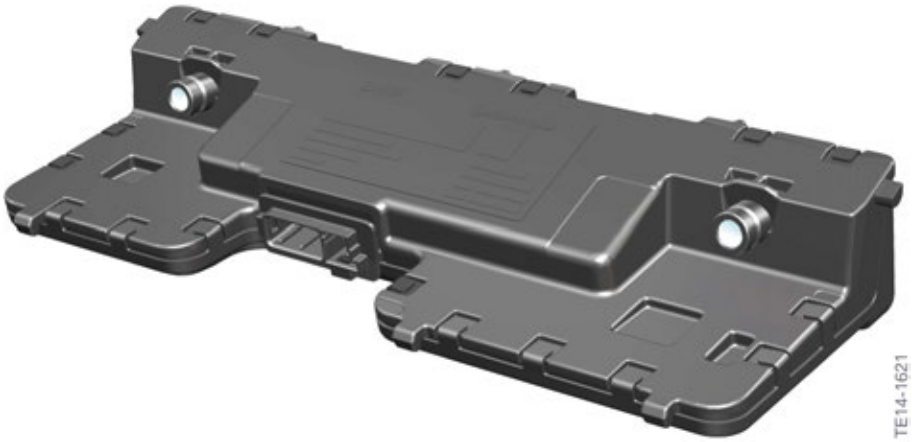

KAFAS stereo camera

CMOS cameras are characterized by their low power consumption, compact size and very high frame rate.

CMOS = Complementary Metal Oxide Semiconductor

The KAFAS stereo camera is calibrated within a distance of approximately 2 km during driving.

G12 Driver Assistance Systems
3. KAFAS

The KAFAS stereo camera is the key element of the following systems:

- Frontal Collision Warning with City Collision Mitigation
- Daytime Pedestrian Protection
- Lane Departure Warning
- Road Sign Recognition

The KAFAS stereo camera plays a supporting role in the following systems:

- Active Cruise Control with Stop&Go (ACC)
- Traffic Jam Assistant
- Active Lane Keeping Assistant with Side Collision Avoidance

G12 Driver Assistance Systems

3. KAFAS

3.1. Detection range

Due to differences in perspective between the left and right optical path of the camera, the stereo camera is able to measure the distance to an object and now also its height above road level.

While the monochrome camera merely estimates distances, the stereo camera can determine the distance to an object fairly accurately – to within approximately 20 to 30 cm – from approximately 40 m away.

KAFAS stereo camera detection range

In principle, the evaluation electronics in the KAFAS stereo camera use the same effect as is used in a human to create spatial vision. This is known as the parallax shift between two images.

The KAFAS stereo camera not only enables the position of an object to be determined, but also its movement and direction of movement. For every pixel of a detected object, the direction of movement on the horizontal, vertical and longitudinal axis can be determined.

The KAFAS stereo camera has a detection range of up to approximately 40 m ahead of the vehicle and up to approximately 5 m in front of the vehicle on the right and left. The overall detection range of the KAFAS stereo camera is approximately 500 m.

G12 Driver Assistance Systems
3. KAFAS

3.2. Person recognition

The KAFAS stereo camera captures the scene in front of the vehicle and detects entire rear views of moving and stationary vehicles in the field of view using image processing. The KAFAS stereo camera also ensures that driving lane information, vehicle positions and movements are determined at the same time.

With the aid of the image data from the KAFAS stereo camera, objects can be clearly identified as vehicles and their transverse movements as lane changes. The KAFAS stereo camera also detects people and cyclists.

Example of pedestrian recognition by the KAFAS stereo camera: pedestrian approaching from the side steps into the road and is partially hidden

The two separate optical paths are also beneficial in challenging conditions, for example difficult lighting conditions, where there is low contrast between the image and background or when several objects are closely lined up one after the other.

Thanks to the redundant image detection of the stereo camera, it is now possible to reliably detect obstacles and determine their size from a single image.

3.3. Road Sign Recognition

The KAFAS stereo camera is also responsible for detecting speed limit road signs. This function is known as Speed Limit Information (SLI).

G12 Driver Assistance Systems
3. KAFAS

3.4. Lane detection

The KAFAS stereo camera installed in the mirror base of the interior mirror on the windshield monitors the area in front of the vehicle.

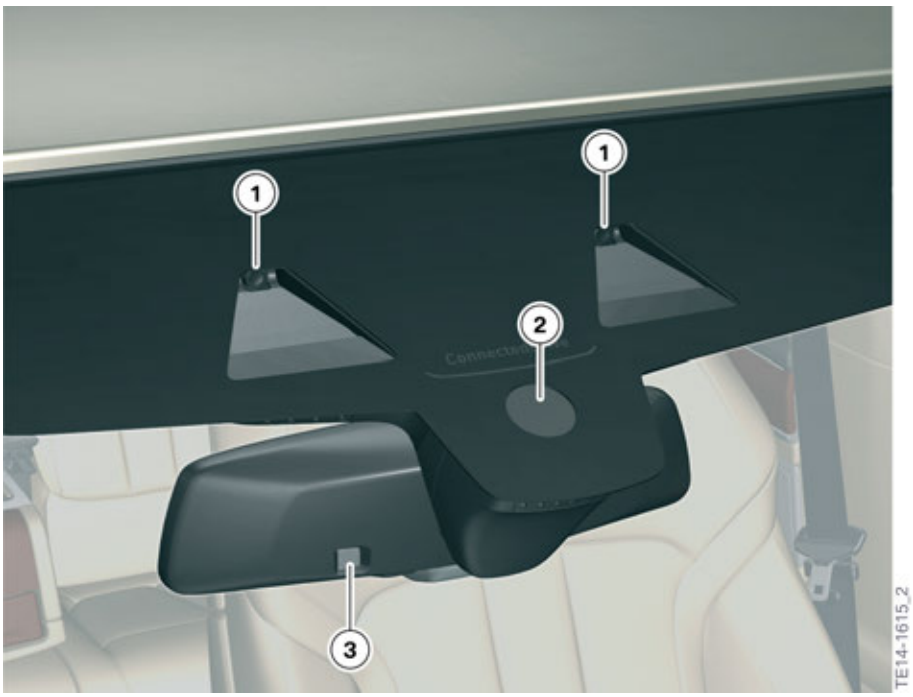

KAFAS stereo camera

Index	Explanation
1	KAFAS stereo camera
2	Rain-light-solar-condensation sensor
3	Photosensor for electrochromic interior mirror

The KAFAS stereo camera records the roadway up to approximately 40 m ahead of the vehicle and up to approximately 5 m to the right and left of the vehicle. The image data is then evaluated by the KAFAS control unit integrated in the KAFAS stereo camera. Using image processing, the control unit searches the images recorded by the KAFAS stereo camera for lane and road markings.

The appearance of the road markings can vary considerably in the image depending on the country, type of road or the current ambient conditions. The system can detect a wide range of road markings and types of markings. For a lane marking to be evaluated, the KAFAS stereo camera and the KAFAS control unit must first be able to clearly identify it. A lane must also have an average width greater than 2.5 m for it to be evaluated.

G12 Driver Assistance Systems
3. KAFAS

3.5. Detection of the road condition

The KAFAS stereo camera in the G12 also detects the road condition.

In vehicles with the Active Comfort Drive with Road Preview optional equipment (OE 2VS), the data collected is used to adapt the chassis and suspension setting to the road condition by changing various setting parameters in the Dynamic Drive (ARS) and Electronic Damper Control (EDC) and tailoring the interaction with the two-axle air suspension.

Detection of road bumps with the help of the stereo camera

Objects can now be dealt with actively instead of reactively, and therefore more easily, at speeds of approximately 15 to 100 km/h.

The structure of the vehicle moves less vertically, as the vehicle drives in harmony with the road. Bumps are less noticeable for the driver.

3.6. Limits of the system

The function of the KAFAS stereo camera and thus the function of the corresponding assistance systems may be impaired due to the physical limits of the optical systems, for example in the following situations:

- Heavy fog, rain, spray or snow.
- Strong light in the camera lens.
- If the field of view of the KAFAS stereo camera or the windscreen is dirty.
- On tight bends.
- If boundary lines are missing, worn, poorly visible, converging or diverging, or not clearly recognizable, as may be the case when roadworks are being carried out.
- If boundary lines are covered by snow, ice, dirt or water.
- If boundary lines are covered by objects.
- If driving at close proximity to a vehicle driving ahead.
- If the windscreen in front of the interior mirror is misted over, soiled or covered by stickers, e.g. tax discs, etc.
- Up to 10 seconds after driving readiness is activated via the start/stop button.
- During the calibration process for the KAFAS stereo camera immediately after vehicle delivery or a camera change.

Example of limits of the KAFAS stereo camera

Due to functional limitations and system restrictions it may transpire that warnings and orders are not issued, are issued too late or are unwarranted. Therefore, be attentive in order to be able to actively intervene at any time. Otherwise, there is a risk of an accident.

G12 Driver Assistance Systems

4. Optional Equipment System

The familiar optional equipment system (SAS) control unit is also used in the G12 and provides a range of driver assistance functions.

Possible functions:

- Frontal Collision Warning with City Collision Mitigation
- Daytime Pedestrian Protection
- Dynamic Brake Control
- Distance information
- Dynamic Cruise Control
- Active Cruise Control with Stop&Go function
- Active Lane Keeping Assistant with Side Collision Avoidance
- Traffic Jam Assistant
- Speed Limit Information
- Blind Spot Detection
- Lane Departure Warning
- Cross Traffic Alert
- Parking Maneuver Assistant
- Proactive Driving Assistant

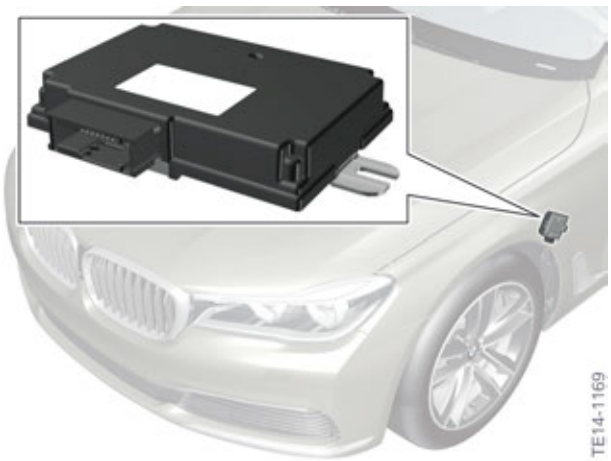

G12 Optional equipment system (SAS) control unit

G12 Driver Assistance Systems

5. Overview Of Sensors

The graphic below provides an overview of the main sensors used in the G12 for the assistance systems and shows their installation locations.

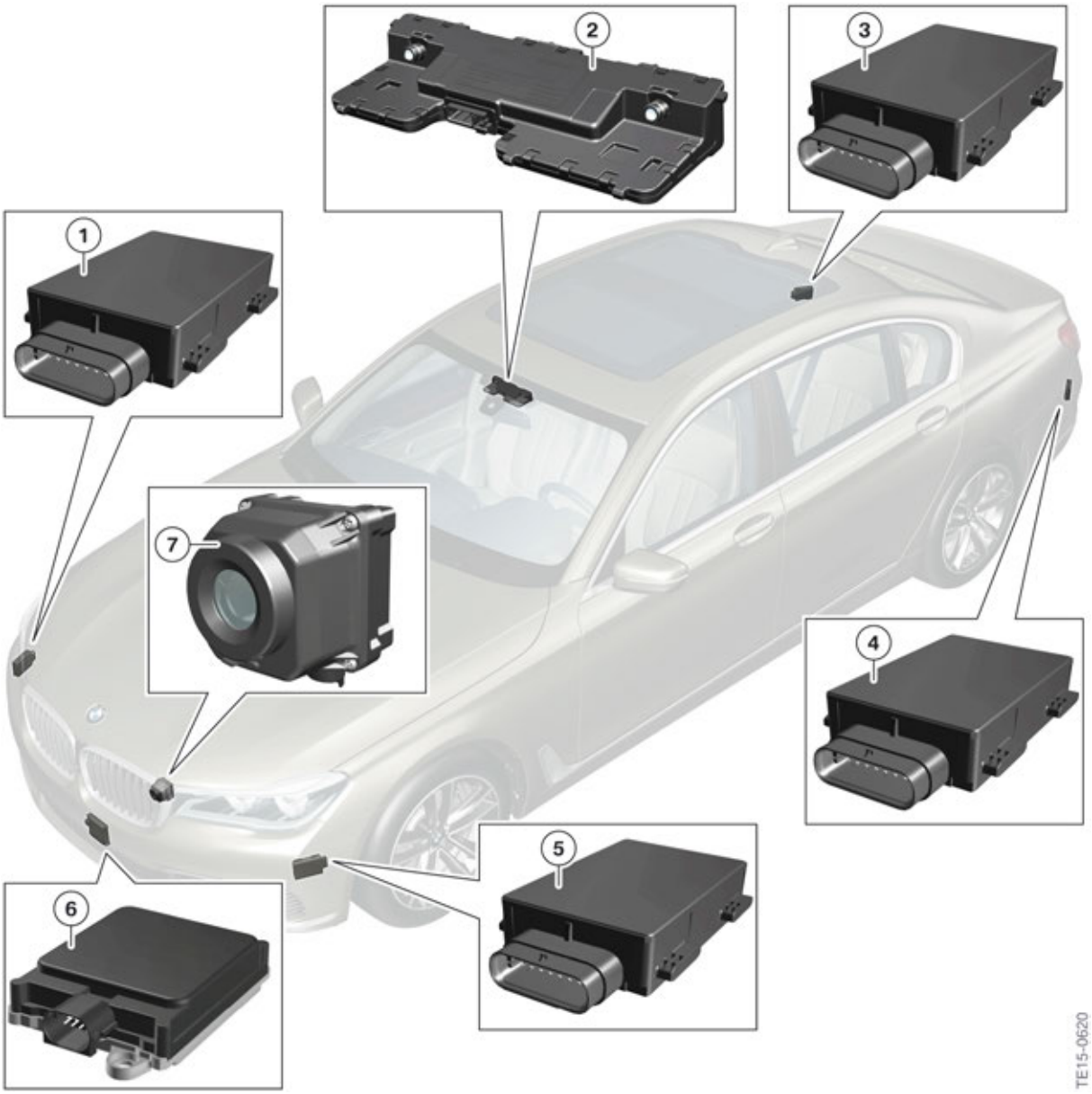

G12 Overview of sensors

G12 Driver Assistance Systems

5. Overview Of Sensors

Index	Explanation
1	Control unit for radar sensor, right (RSR) (also known as Short Range Radar (SRR) in Technical Systems)
2	KAFAS stereo camera
3	Blind Spot Detection, right (primary) (also known as Short Range Radar (SRR) in Technical Systems)
4	Blind Spot Detection, left (secondary) (also known as Short Range Radar (SRR) in Technical Systems)
5	Control unit for radar sensor, left (RSL) (also known as Short Range Radar (SRR) in Technical Systems)
6	Active Cruise Control (ACC) (FRR) (also known as Full Range Radar (FRR) in Technical Systems)
7	Night Vision camera

G12 Driver Assistance Systems

6. Intelligent Safety

Due to the ever increasing amount of traffic on our roads, assistance systems in vehicles continue to gain in importance. They assist the driver on highways, single-lane roads and in urban environments.

Urban traffic is just one area that presents an ever increasing number of challenges. Car drivers must be constantly aware of cyclists and pedestrians. Systems such as the Daytime Pedestrian Protection are helpful in this respect. Night Vision can assist the driver when driving on single-lane roads with adjacent woodland (deer crossings, etc.). The Lane Departure and Blind Spot Detection as well as the Side Collision Avoidance provide even more safety in traffic. Accidents can be avoided through automatic brake interventions, active steering interventions or a combination of both.

Depending on the vehicle equipment, Intelligent Safety consists of one or several systems, which can help to avoid a potential collision. The following systems are offered in the G12:

- Frontal Collision Warning with City Collision Mitigation
- Daytime Pedestrian Protection
- Night Vision with person and animal recognition
- Lane Departure Warning
- Blind Spot Detection
- Side Collision Avoidance

The Intelligent Safety button enables the assistance systems to be operated centrally. This means the systems can be switched on or off using a button and the submenu can be called up to personalize the settings.

G12 Intelligent Safety button

Index	Explanation
1	Intelligent Safety button

G12 Driver Assistance Systems

6. Intelligent Safety

Press button

- The "Intelligent Safety" menu is displayed on the Central Information Display (CID). Settings can be made using the controller. The individual settings are stored for the respective ID transmitter used.

Press and release button

- When all Intelligent Safety systems are switched on:
  Intelligent Safety systems are switched off individually depending on the individual setting.
- When all Intelligent Safety systems are not switched on:
  All Intelligent Safety systems are switched on.

Press button for an extended period

- All Intelligent Safety systems are switched off.

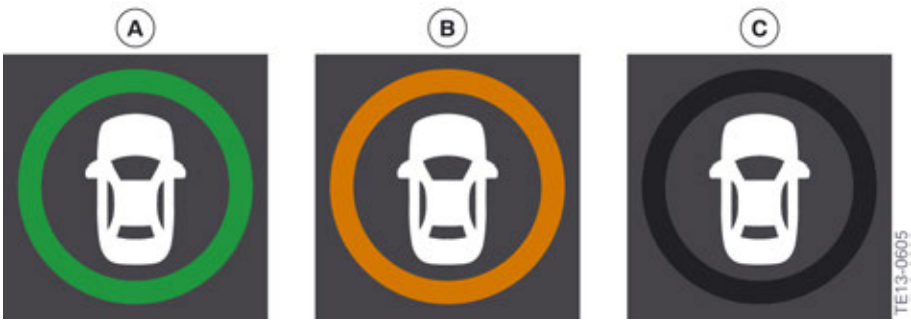

G12 Status indicator light (Intelligent Safety button)

Index	Explanation
A	All Intelligent Safety systems are switched on
B	Some Intelligent Safety systems are switched off or sub-function settings have been changed
C	All Intelligent Safety systems are switched off

The Intelligent Safety systems are automatically active after each engine start via the START-STOP button.

G12 Driver Assistance Systems

6. Intelligent Safety

6.1. Overview of the configuration menu

The system is operated by pressing the Intelligent Safety button and using a menu to configure the Intelligent Safety systems on the Central Information Display (CID).

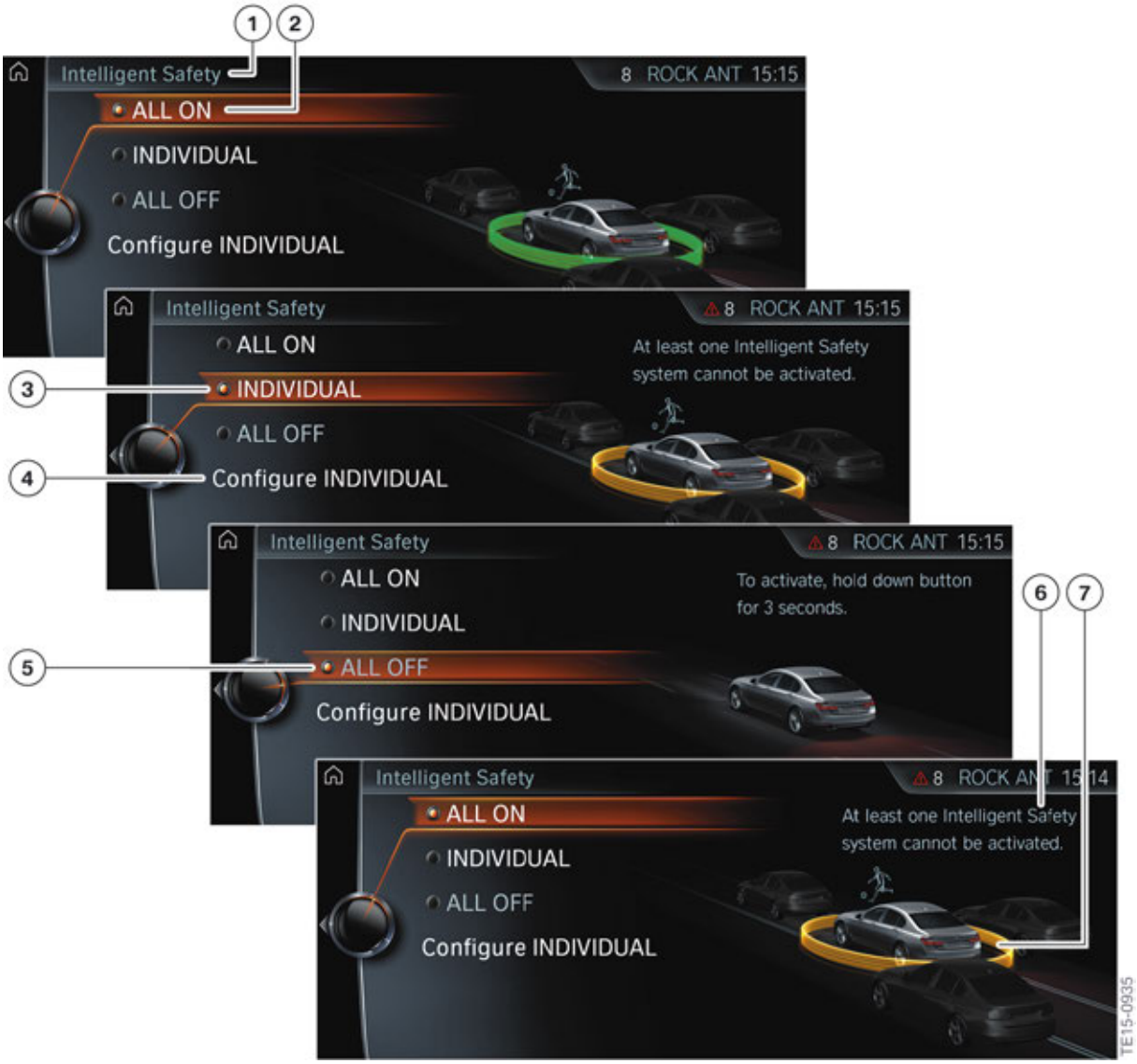

G12 Intelligent Safety configuration menu overview

G12 Driver Assistance Systems

6. Intelligent Safety

Index	Explanation
1	"Intelligent Safety" configuration menu
2	"ALL ON" selection
3	"INDIVIDUAL" selection
4	"Configure INDIVIDUAL"
5	"ALL OFF" selection
6	Note for the driver: in this example not all of the Intelligent Safety systems could be activated.
7	Note for the driver: the color of the circle shows the driver the activation status of the Intelligent Safety systems. The color of the circle changes always matches the color of the Intelligent Safety button indicator light.

"ALL ON"

- All Intelligent Safety systems are switched on. The basic settings are activated for the sub-functions, for example the warning time setting. The Intelligent Safety button lights up green.

"INDIVIDUAL"

- The Intelligent Safety systems are switched on in accordance with the individual settings. Depending on the vehicle equipment, the Intelligent Safety systems can be configured individually. The individual settings are activated and stored for the respective ID transmitter used.

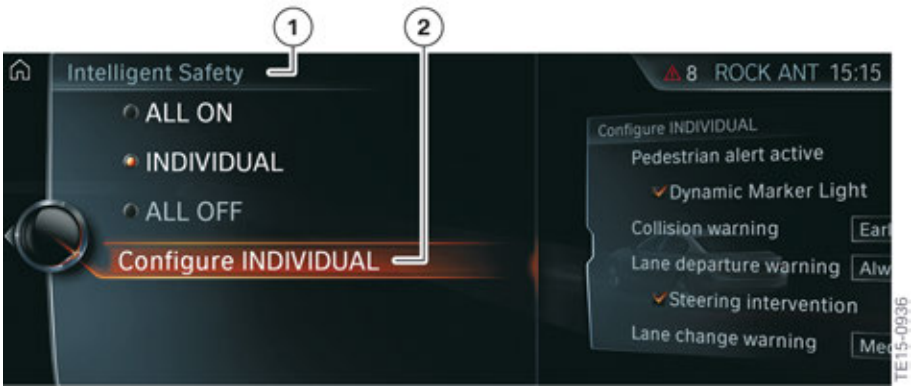

G12 Intelligent Safety ("Configure INDIVIDUAL" selection)

Index	Explanation
1	"Intelligent Safety"
2	"Configure INDIVIDUAL"

G12 Driver Assistance Systems

6. Intelligent Safety

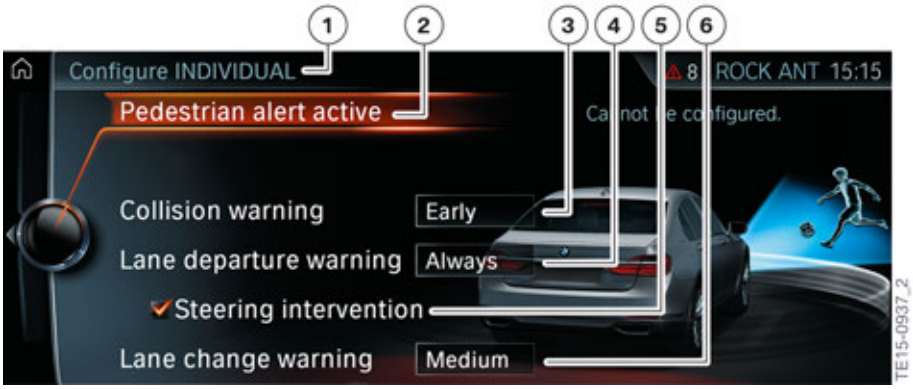

G12 Intelligent Safety "INDIVIDUAL" configuration menu (settings options)

Index	Explanation
1	"Configure INDIVIDUAL"
2	"Pedestrian warning active"
3	"Collision warning" (selected setting: Early)
4	"Lane Departure Warning" (selected setting: Always)
5	"Steering intervention"
6	"Blind Spot Detection" (selected setting: Medium)

As soon as a setting is changed in the menu, all the settings the driver has previously configured are activated. The Intelligent Safety button lights up orange.

"ALL OFF"

- All Intelligent Safety systems are switched off. The Intelligent Safety button does not light up.

G12 Driver Assistance Systems

7. Collision Warning

The camera-based collision warning is part of the Active Driving Assistant optional equipment (OE 5AS) in the G12 and is implemented using the KAFAS stereo camera.

The collision warning in the new BMW 7 Series contains the familiar "Frontal Collision Warning with City Collision Mitigation" and the "Daytime Pedestrian Protection" functions.

In vehicles with the Active Cruise Control with Stop&Go function (part of Active Driving Assistant Plus optional equipment (OE 5AT)), the cruise control radar sensor is also used to control the collision warning.

Vehicles with the Active Driving Assistant Plus optional equipment (OE 5AT) have the Active Cruise Control with Stop&Go function integrated as standard.

The system warns the driver in situations where a collision is imminent. The early warning, a visual signal, is issued first to draw the driver's attention to the situation. If the situation becomes more critical, an acute early warning in the form of a visual and acoustic signal is issued. The nature of the warning is such that the driver can still prevent a collision providing he acts quickly.

7.1. Functional principle

The KAFAS stereo camera captures the scene in front of the vehicle and detects entire rear views of moving and stationary vehicles in the field of view using image processing.

In vehicles with the Active Cruise Control with Stop&Go function (part of Active Driving Assistant Plus optional equipment (OE 5AT), in addition to the KAFAS stereo camera image data, information from the radar sensor is also evaluated.

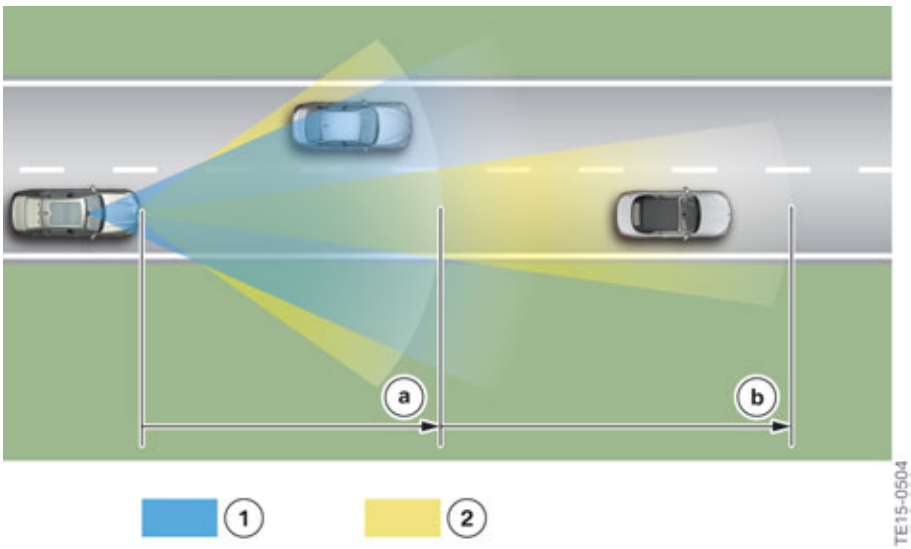

G12 Schematic diagram of the monitoring ranges

Index	Explanation
a	Close range
b	Long distance
1	KAFAS stereo camera detection range
2	Detection range of the radar sensor

The corresponding warning stages "early warning" and "acute warning" are output in critical situations on the basis of the calculated positions, distances and relative speeds of other vehicles. For the early warning the brakes of the vehicle are prepared for emergency braking and the activation thresholds of the Dynamic Brake Control are reduced. If the driver makes the conscious decision to drive up close to the vehicle ahead, warnings which may otherwise be distracting can be prevented by reducing the sensitivity of the system.

7.1.1. Frontal Collision Warning with City Collision Mitigation

The Frontal Collision Warning with City Collision Mitigation adds a brake activation function to the camera-based collision warning from a speed of roughly 5 km/h up to a maximum speed of 80 km/h. If there is still no response from the driver in this speed range after an acute warning is issued, the vehicle is decelerated at a maximum rate of 4 m/s².

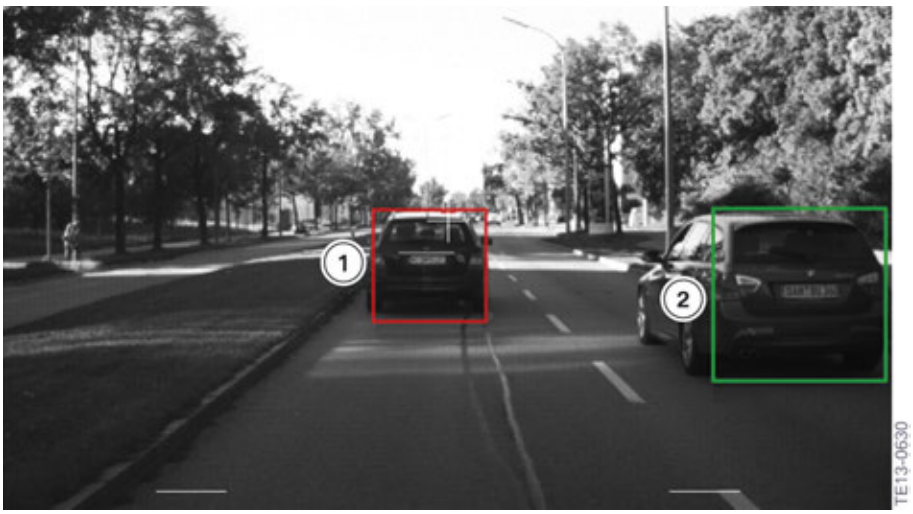

Example of vehicle identification by KAFAS camera

Index	Explanation
1	Vehicle in same lane
2	Vehicle in different lane

The duration of the brake intervention is limited to approximately 1.5 seconds. Additional dangers for the traffic behind are therefore avoided.

7.1.2. Daytime Pedestrian Protection

The Daytime Pedestrian Protection is designed to prevent possible collisions with pedestrians in urban areas or reduce the effects of an accident. The system warns of a possible collision with pedestrians from a speed of approximately 10 km/h up to a maximum speed of 60 km/h and assists the driver with a brake intervention shortly before a collision.

The KAFAS stereo camera captures the scene in front of the vehicle and detects pedestrians in the field of view using image processing.

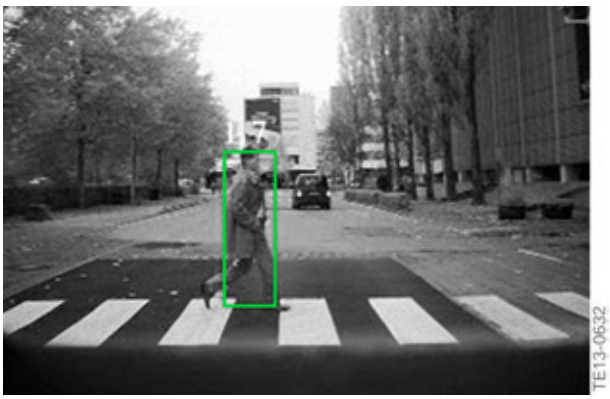

Example of person recognition by KAFAS camera

Based on the calculated positions, distances and the movement of the detected pedestrians, an acute warning is issued in critical situations. An early warning is not available for the Daytime Pedestrian Protection.

With an acute warning, the vehicle is decelerated by roughly 4 m/s². The duration of the brake intervention is limited to approximately 1.5 seconds. Additional dangers for the traffic behind are therefore avoided.

7.2. Warning and braking function

The operating principle of the collision warning is based on a detection and warning algorithm. Machine vision detects pedestrians and vehicles in the detection range of the camera. If there is a risk of a collision, a warning symbol is shown in the instrument cluster (KOMBI), or in the Head-Up Display for vehicles with the Head-Up Display standard equipment (OE 610). The warning function is divided into two stages. The next probable movement of an object is determined based on the current movement of the detected object and, taking into account the movement of the object, a collision risk is identified. If a situation is evaluated as critical by the warning algorithm, a warning is issued and braking is introduced based on a multistage warning concept. The warnings and brake interventions differ for pedestrians and vehicles.

G12 Driver Assistance Systems

7. Collision Warning

7.2.1. Displays

Symbol	Explanation
	Early warning: • Vehicle symbol lights up red • Increase distance and brake if necessary
	Acute warning: • Vehicle symbol flashes red and a signal sounds • Request for intervention by braking and evasive action, if required
	Acute warning: • Person symbol flashes red and a signal sounds • Request for intervention by braking and evasive action, if required

7.2.2. Early warning

Occasions when an early warning is issued include when there is a collision risk because the vehicle driving ahead is being driven at a much slower speed and/or if the distance to a driven or stationary vehicle ahead is extremely short.

An early warning is indicated by a vehicle symbol which lights up red in the instrument cluster (KOMBI) or Head-Up Display. The early warning is only issued for vehicles and not for pedestrians.

The point at which the early warning is issued can be configured in the "Intelligent Safety Systems“ menu on the Central Information Display (CID).

⚠

The collision warning is dependent on the vehicle's own driving speed. The distance measured for the collision warning is significantly lower than the legally required minimum distance. It is therefore the responsibility of the driver to adhere to the legal minimum distance.

7.2.3. Acute warning

The acute warning is issued by the system as late as possible and only if there is an imminent danger of a collision when the vehicle is approaching the vehicle driving ahead at a relatively high differential speed or if there is an imminent danger of a collision with a pedestrian. The time of the acute warning is measured so that a collision can only be avoided by immediate emergency braking or by swerving. The acute warning therefore cannot be deliberately brought about or monitored by the driver. The acute warning is issued for vehicles and pedestrians.

If the vehicle is approaching the vehicle driving ahead or a pedestrian at a very low speed, an acute warning is not issued even when the distance is very small. This intentional driving situation only triggers the early warning. This way there are fewer meaningless and annoying acute warnings issued by the system.

The acute warning cannot be deactivated separately. The timing of the acute warning also cannot be adjusted. If the acute warning is not to be issued, the "collision warning" front protective function must be deactivated.

If an acute warning is issued, this is indicated to the driver by a red flashing vehicle symbol or a red flashing person symbol in the instrument cluster (KOMBI) or Head-Up Display. In addition, an acoustic warning signal is sounded.

The acute warning for pedestrians is issued within a speed range of approximately 10 km/h to 60 km/h. The acute warning for vehicles is issued at speeds above approximately 5 km/h.

When the acute warning is issued, the brake system is also preconditioned in order to achieve quicker and sharper deceleration. With these measures the driver also receives specific support at the same time as the warning in order to be able to respond effectively.

⚠

The acute warning does not relieve the driver of his responsibility to adapt the speed and driving style to the traffic conditions.

7.2.4. Brake intervention

With the camera-based Frontal Collision Warning with City Collision Mitigation (included with Active Driving Assistant OE 5AS); If the driver no longer has the option to avoid the accident with his own response, automatic brake intervention is effected as a last step. The brake intervention is applied at a deceleration of about 4 m/s² (camera-based) and can have the effect of avoiding a collision up to a differential speed of about 18 km/h. At higher differential speeds the impact speed is reduced by a smaller amount. Just like the driver can support the effect of the system, he also has the option of overriding and thus cancelling the automatic panic braking at any time with a steering wheel movement (avoidance maneuver), by accelerating or with a sharp brake intervention.

With the camera- and radar-based Frontal Collision Warning with City Collision Mitigation (included with Active Driving Assistant Plus OE 5AT); If the driver no longer has the option to avoid the accident with his own response, automatic brake intervention is effected as a last step. The brake intervention is applied at a deceleration of about 8 m/s² (camera- and radar-based) and can have the effect of avoiding a collision up to a differential speed (delta) of about 30 km/h.

G12 Driver Assistance Systems

7. Collision Warning

In summary, brake intervention is possible whether the vehicle is equipped with the camera-based system (Active Driving Assistant OE 5AS) or if the vehicle is equipped with the camera- and radar-based system (Active Driving Assistant Plus OE 5AT). The difference between the two is the rate of deceleration possible: 4 m/s² for vehicles with optional equipment 5AS and 8 m/s² for vehicles with optional equipment 5AT.

The brake intervention is effected for pedestrians in the speed range between 10 and 60 km/h and for vehicles in the speed range between 5 and 60 km/h.

For a brake intervention to be possible, the Dynamic Stability Control (DSC) must be switched on.

Time plan for Frontal Collision Warning with City Collision Mitigation

The time plan of the warnings and braking is demonstrated in the following graphic. If an avoidance measure by the driver is detected, there is no brake intervention.

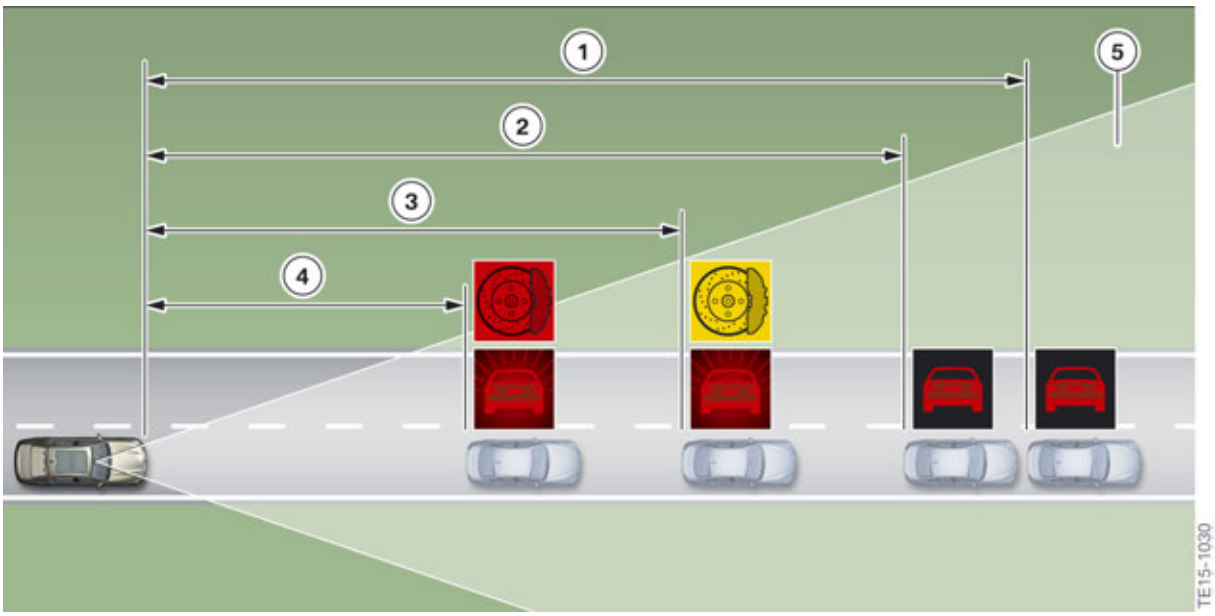

Time plan for the collision warning

Index	Explanation
1	Collision warning ("early")
2	Collision warning ("late")
3	Acute warning (acoustic warning signal, brake system is pre-filled and brake assistants are adapted)
4	Braking at 4 m/s² is applied with Active Driving Assistant (OE 5AS) (only between 5 and 60 km/h) or 8 m/s² with the Active Driving Assistant Plus (OE 5AT)
5	KAFAS stereo camera detection range

7.3. Operation

The collision warning and pedestrian warning are switched on and off via the Intelligent Safety button.

G12 Intelligent Safety button

Index	Explanation
1	Intelligent Safety button

The point at which the early collision warning is issued can be configured in the "Intelligent Safety systems" menu on the Central Information Display (CID).

G12 Driver Assistance Systems

7. Collision Warning

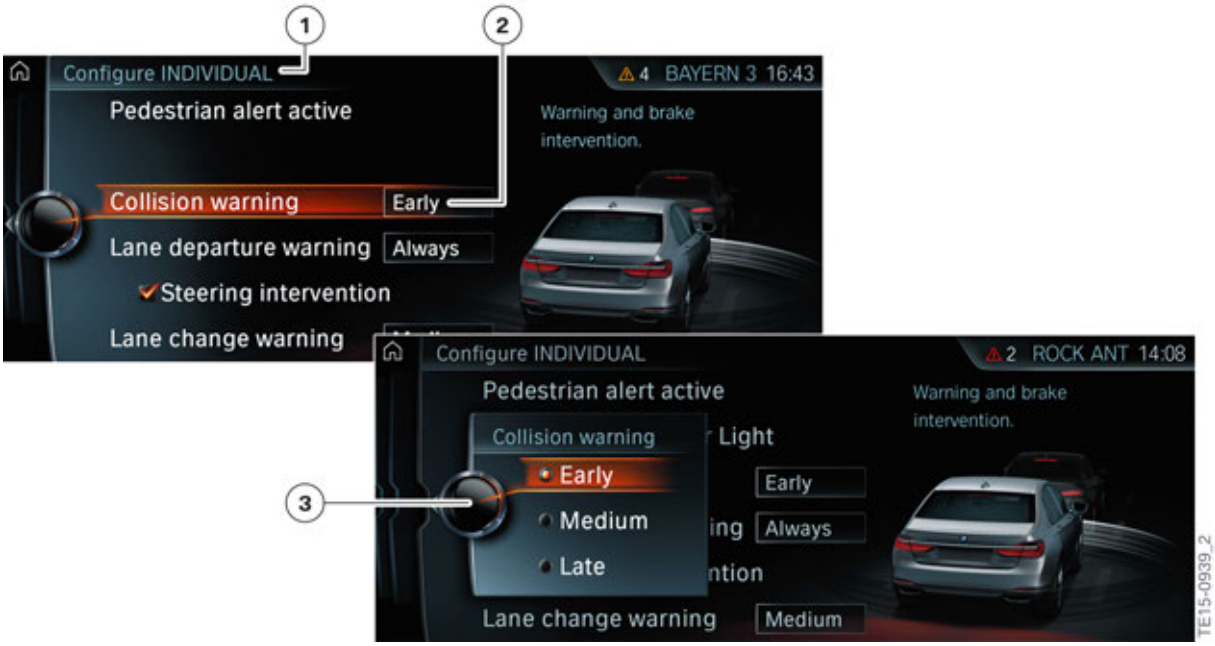

G12 Intelligent Safety view on the CID (collision warning with city brake activation)

Index	Explanation
1	"Configure INDIVIDUAL"
2	"Collision warning" (selected setting: Early)
3	"Collision warning" (settings options: Early, Medium, Late)

The acute warning cannot be deactivated separately. The timing of the acute warning also cannot be adjusted. If the acute warning is not to be issued, the "collision warning" front protective function must be deactivated. The collision warning can be switched off by holding down the Intelligent Safety button.

It is also not possible to configure or deactivate the pedestrian warning separately. The "collision warning" front protective function must be also deactivated by holding down the Intelligent Safety button in order to deactivate the pedestrian warning function.

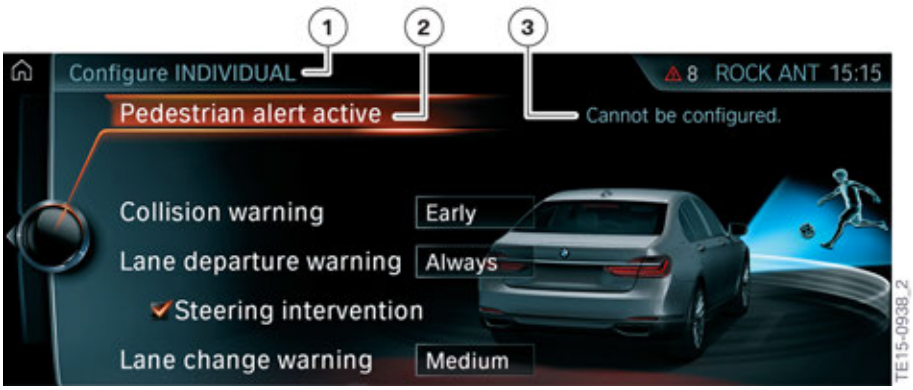

G12 Intelligent Safety view on the CID (pedestrian warning with city brake activation)

Index	Explanation
1	"Configure INDIVIDUAL"
2	"Pedestrian warning active"
3	Note for the driver: "Pedestrian warning cannot be configured."

7.4. Limits of the system

Range of detection

The collision warning has a limited capacity for detection.

As a result, incorrect or delayed warnings may occur. It is possible the following vehicles are not detected:

- A slow vehicle when driving off at high speed.
- Vehicles that suddenly swerve or decelerate rapidly.
- Vehicles with an unusual rear view or with insufficiently visible rear lights.
- Partially concealed vehicles.
- Two-wheeled vehicles travelling ahead.

Functional limitations

The function of the KAFAS stereo camera and thus also the function of the corresponding assistance systems may be impaired in the following situations, for example:

- Heavy fog, rain, spray or snow.
- Insufficient light.
- Strong light in the camera lens.
- If the field of view of the KAFAS stereo camera or the windscreen is dirty.
- On sharp bends.
- With pedestrians up to approximately 80 cm in height.
- Up to 10 seconds after the engine start via the START-STOP button.
- During the calibration process for the KAFAS stereo camera immediately after vehicle delivery or a camera change.

Due to functional limitations and system restrictions it may transpire that warnings and orders are not issued, are issued too late or are unwarranted. Therefore, be attentive in order to be able to actively intervene at any time. Otherwise, there is a risk of an accident.

G12 Driver Assistance Systems

8. Lane Departure Warning

The Lane Departure Warning is an element of the optional equipment Active Driving Assistant (OE 5AS) and the optional equipment Active Driving Assistant Plus (OE 5AT).

The Lane Departure Warning detects lane markings from a speed of approximately 70 km/h and warns the driver against unintentionally leaving the lane.

The information required about usable roadway and lane markings is provided by the KAFAS stereo camera. Based on the calculated positions, lane edges and curves in relation to the relative position of the driver's vehicle, a corresponding warning is issued.

If the driver crosses the lane marking unintentionally (without using the turn indicator) or leaves the road boundary, he is warned by the steering wheel vibrating gently and has the opportunity to react accordingly. The vibration in the steering wheel can be compared to the vibration effect when driving over a profiled road marking.

In the settings menu the driver can set the desired strength of the vibration warning on the steering wheel via the iDrive.

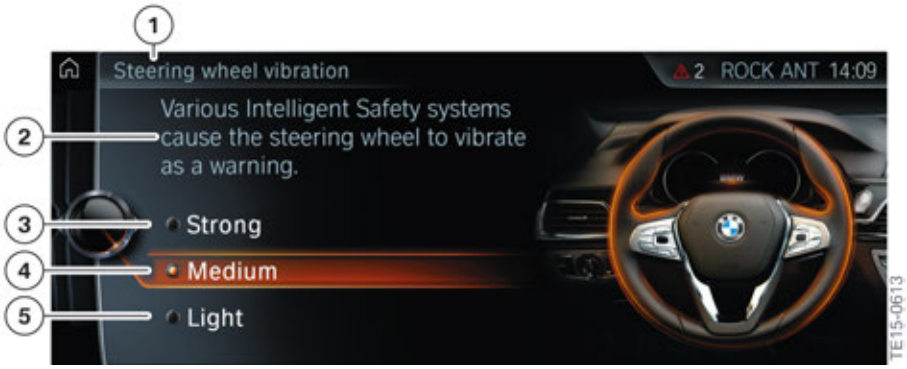

G12 Steering wheel vibration settings menu on CID

Index	Explanation
1	Steering wheel vibration menu
2	Additional note for the driver
3	"Strong"
4	"Medium"
5	"Light"

If the driver uses the turn indicator when moving across to another lane, the Lane Departure Warning recognizes that this is an intentional lane change and a warning is not issued.

The Lane Departure Warning can be configured individually in the Intelligent Safety system submenu.

G12 Driver Assistance Systems

8. Lane Departure Warning

G12 Intelligent Safety view on the CID (Lane Departure Warning)

Index	Explanation
1	"Configure INDIVIDUAL"
2	"Lane Departure Warning" (selected setting: Always)
3	"Lane Departure Warning" (settings options: Always, Reduced, Off)

The individual settings applied by the driver are saved for the driver profile currently in use.

Displays in the instrument cluster (KOMBI)

Symbol	Explanation
	At least one lane boundary has been detected and warnings can be issued.

G12 Driver Assistance Systems

8. Lane Departure Warning

8.1. Active steering intervention

In vehicles with the Side Collision Avoidance (included in Active Driving Assistant Plus optional equipment OE 5AT), the driver is assisted by another measure known as "active steering intervention".

If the driver does not react to the warning issued by the Lane Departure Warning system and crosses the lane marking, he is assisted to stay in lane by a brief active steering intervention.

G12 Active steering intervention

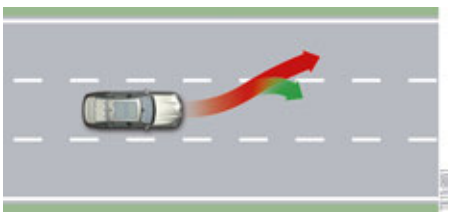

G12 Lane Departure Warning (active steering intervention)

The active steering intervention can be felt on the steering wheel, but can be overridden by the driver at any time. If the driver does override the intervention, the active steering intervention is cancelled.

The "steering intervention" for the Lane Departure Warning can be switched on and off in the iDrive menu in vehicles with the Side Collision Avoidance by making the following selection via the controller:

- "My Vehicle"
- "Vehicle settings"
- "Intelligent Safety"
- "Steering intervention"

The configuration menu can be accessed quickly by pressing the Intelligent Safety button.

G12 Driver Assistance Systems

8. Lane Departure Warning

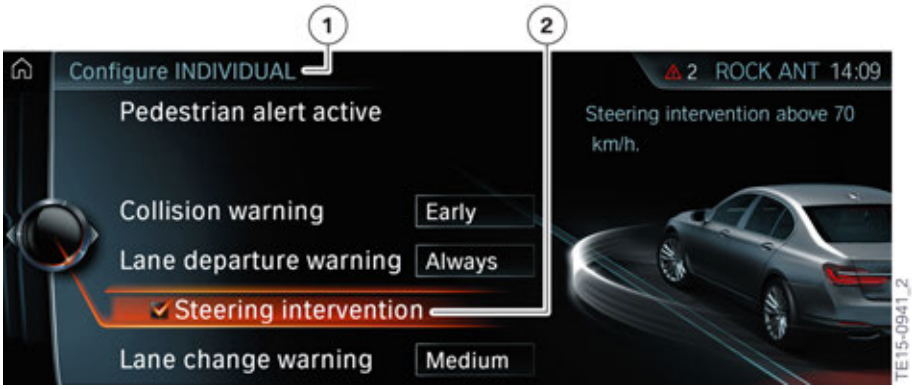

G12 Intelligent Safety view on the CID (Lane Departure Warning with active steering intervention)

Index	Explanation
1	"Configure INDIVIDUAL"
2	"Steering intervention" (switching the steering intervention for Lane Departure Warning on and off)

G12 Driver Assistance Systems

8. Lane Departure Warning

8.2. System wiring diagram

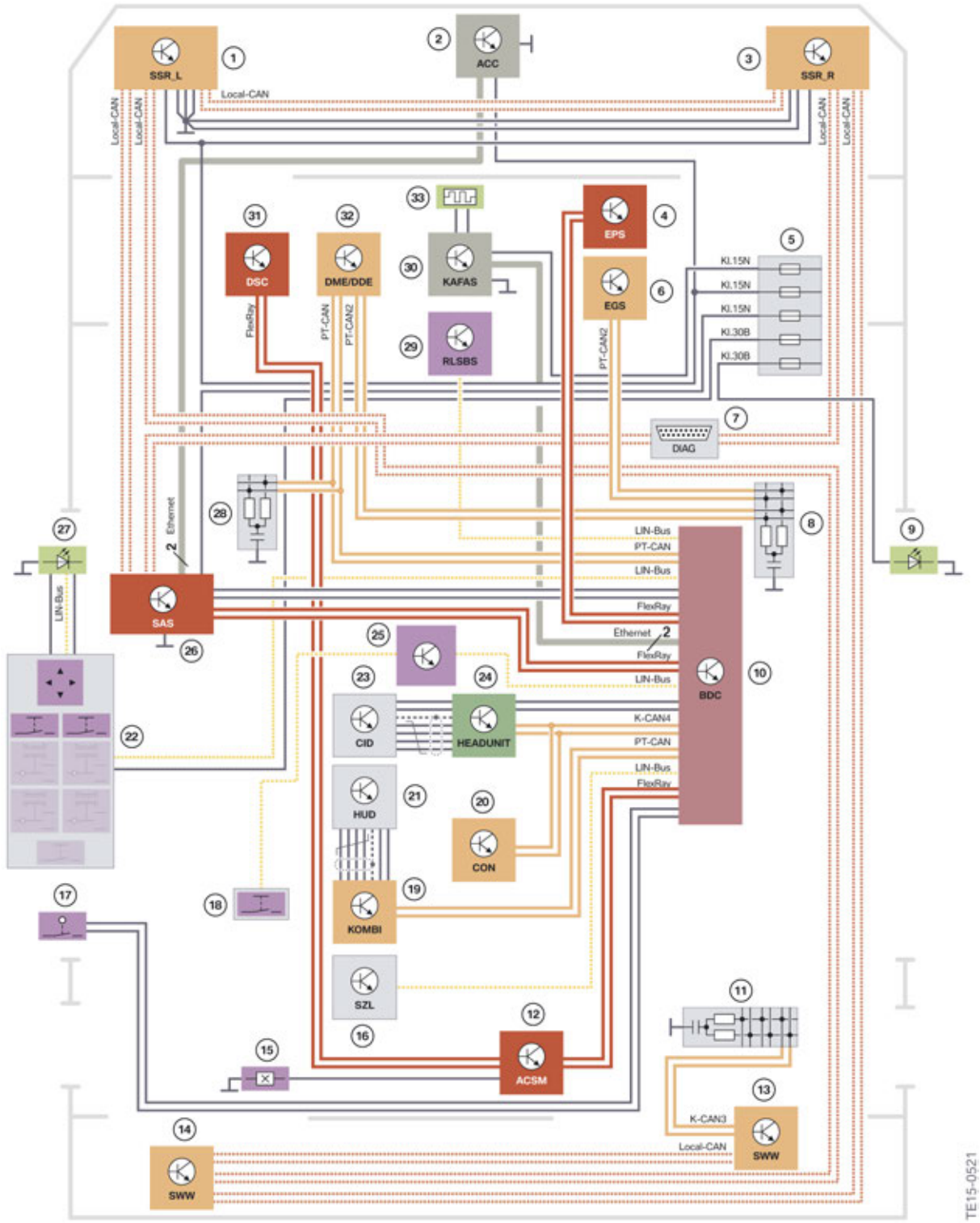

G12 Active Driving Assistant Plus (OE 5AT)/Lane Departure Warning system wiring diagram

G12 Driver Assistance Systems

8. Lane Departure Warning

Index	Explanation
1	Control units for radar sensor, left (RSL) (side radar sensor for the front left Side Collision Avoidance)
2	Active Cruise Control (ACC)
3	Control units for radar sensor, right (RSR) (side radar sensor for the front right Side Collision Avoidance)
4	Electronic Power Steering (EPS)
5	Fuse for power distribution box, front right
6	Electronic transmission control (EGS)
7	Diagnostic socket
8	CAN terminator
9	Signal unit (LED) in right mirror glass
10	Body Domain Controller (BDC)
11	CAN terminator
12	Advanced Crash Safety Module (ACSM)
13	Blind Spot Detection, right (primary)
14	Blind Spot Detection, left (secondary)
15	Seat belt buckle switch, driver
16	Steering column switch cluster (SZL)
17	Driver's door lock switch
18	Intelligent Safety button
19	Instrument panel (KOMBI)
20	Controller (CON)
21	Head-Up Display (HUD)
22	Switch block for driver's door
23	Central Information Display (CID)
24	Head Unit High 2 (HU-H2)
25	Audio control panel
26	Control unit for optional equipment system (SAS)
27	Signal unit (LED) in left mirror glass
28	CAN terminator
29	Rain-light-solar-condensation sensor (RLSBS)
30	KAFAS stereo camera
31	Dynamic Stability Control (DSC)
32	Digital Motor Electronics (DME)
33	KAFAS stereo camera heating

8.3. Deactivation criteria

The Lane Departure Warning is available at a speed range from 70 to 210 km/h.

A warning is not issued in the following situations:

- When the driver uses the turn indicator.
- In roadworks.
- When the lane width is less than 2.60 m.

The warning is cancelled in the following situations:

- Automatically after approximately 3 seconds.
- As soon as the driver moves back into his own lane.
- If the turn indicator is used.
- When sharp braking or steering maneuvers are made and when the Dynamic Stability Control (DSC) intervenes.

8.4. Limits of the system

The function of the system may not be available or may only be available to a limited extent in the following situations:

- Heavy fog, rain or snow.
- At sharp bends or on narrow roadways.
- If boundary lines are covered by snow, ice, dirt or water.
- If boundary lines are covered by objects.
- If boundary lines are missing, worn, poorly visible, converging or diverging, or not clearly recognizable, such as when driving through roadworks.

⚠

The system does not replace the personal assessment of the road and the traffic situation. The Lane Departure Warning is only intended to assist the driver. When active Lane Departure Warnings are issued, the steering wheel should not be moved through any unnecessarily heavy-handed actions.

G12 Driver Assistance Systems

9. Blind Spot Detection

The Blind Spot Detection system can detect traffic situations that could pose a risk if the driver changes lane. These traffic situations include vehicles approaching quickly from behind or vehicles in the driver's blind spot.

The driver may find it difficult to judge these situations, especially when it is dark. The radar sensors detect vehicles in the blind spot and work effectively regardless of the lighting conditions. In addition, they are able to reliably detect such situations up to a distance of approximately 70 m away and irrespective of the weather conditions.

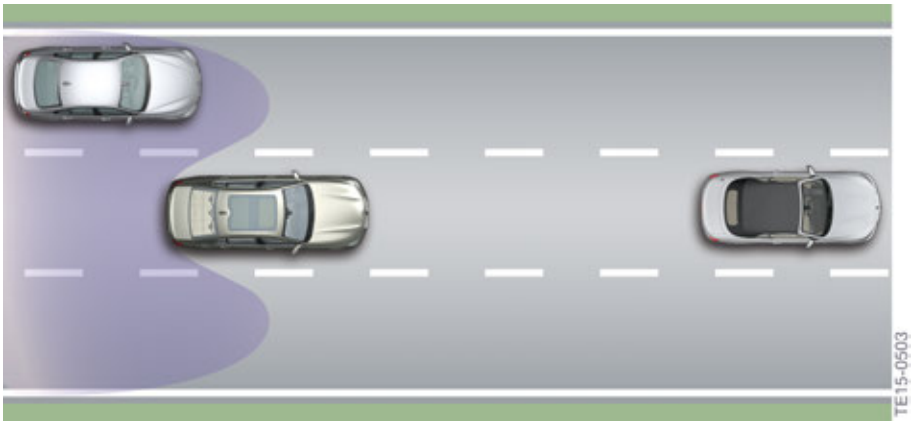

G12 Vehicle detection using radar sensors (Blind Spot Detection)

When a vehicle is approaching quickly or moves into the blind spot of the driver's vehicle, the system assists the driver by correctly judging the situation. If the lane next to the driver's vehicle is occupied, the radar sensors detect the vehicles in the neighboring lane.

The control units (radar sensors) for the Blind Spot Detection (SWW) are located under the rear bumper.

G12 Blind Spot Detection (SWW) (radar sensors)

The control unit for the Blind Spot Detection (SWW) (primary) is installed on the right and the control unit for the Blind Spot Detection (SWW2) (secondary) is installed on the left.

G12 Driver Assistance Systems

9. Blind Spot Detection

When a vehicle is detected and the system is activated, the driver is informed of the situation by an unobtrusive indicator in the exterior mirror. By having this information before making a lane change maneuver, the driver can confidently prepare for the lane change and avoid critical situations from the outset.

The Blind Spot Detection indicators are located in the exterior mirror glass.

G12 Signal unit (LED) in mirror glass

If the driver intends to make a lane change in what the system detects to be a critical situation, and demonstrates this intention by using the turn indicator, the second, more severe "warning" is issued. The corresponding indicator in the exterior mirror flashes with high intensity and the steering wheel starts to vibrate. This warns the driver using the exact operating element that he must use to make the dangerous situation safe. To avoid a potential collision, the driver must steer the vehicle back into his own lane.

G12 Driver Assistance Systems

9. Blind Spot Detection

The Blind Spot Detection can be configured individually in the Intelligent Safety system submenu.

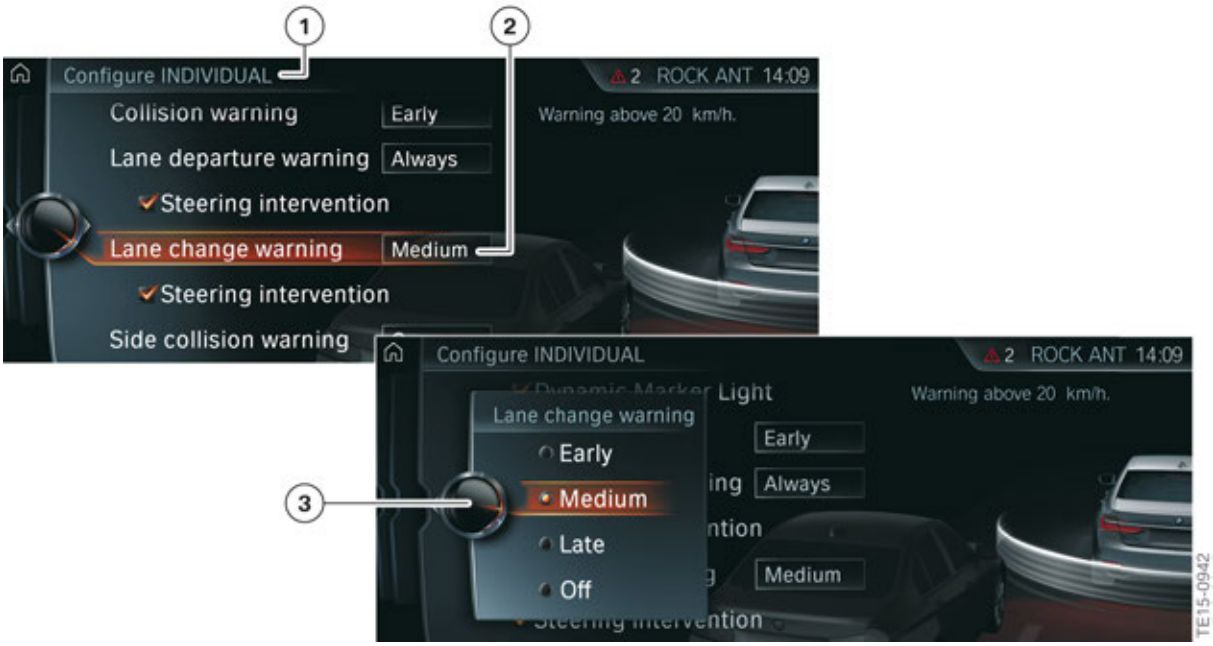

G12 Intelligent Safety view on the CID (Blind Spot Detection)

Index	Explanation
1	"Configure INDIVIDUAL"
2	"Blind Spot Detection" (selected setting: Medium)
3	"Blind Spot Detection" (settings options: Early, Medium, Late, Off)

9.1. Active steering intervention

Depending on the setting in the "Intelligent Safety" menu, a brief active steering intervention is initiated by the system that assists in moving the vehicle back into the original lane (vehicles with the Side Collision Avoidance (included in the Active Driving Assistant Plus optional equipment OE 5AT)).

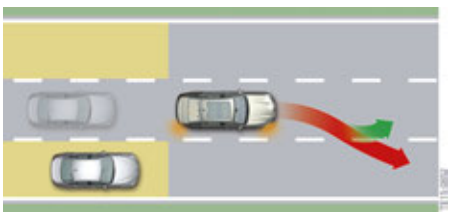

G12 Blind Spot Detection (active steering intervention)

The corresponding Blind Spot Detection indicator flashes in the exterior mirror at the same time.

The steering intervention is initiated within a speed range of between 70 km/h and 210 km/h.

G12 Driver Assistance Systems

9. Blind Spot Detection

The active steering intervention can be felt on the steering wheel, but can be overridden by the driver at any time. If the driver does override the intervention, the active steering intervention is cancelled.

The "steering intervention" for the Blind Spot Detection can be switched on and off in the iDrive menu in vehicles with the Side Collision Avoidance by making the following selection via the controller:

- "My Vehicle"
- "Vehicle settings"
- "Intelligent Safety"
- "Steering intervention"

The configuration menu can be accessed quickly by pressing the Intelligent Safety button.

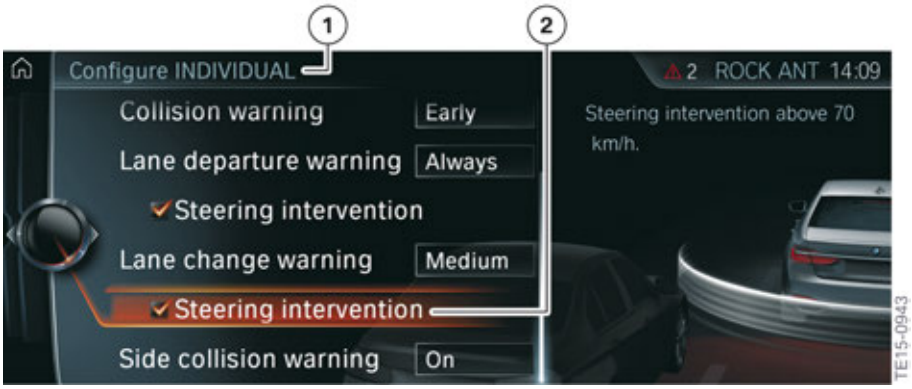

G12 Intelligent Safety view on the CID (Blind Spot Detection with active steering intervention)

Index	Explanation
1	"Configure INDIVIDUAL"
2	"Steering intervention" (switching the steering intervention for Blind Spot Detection on and off)

G12 Driver Assistance Systems

9. Blind Spot Detection

9.2. System wiring diagram

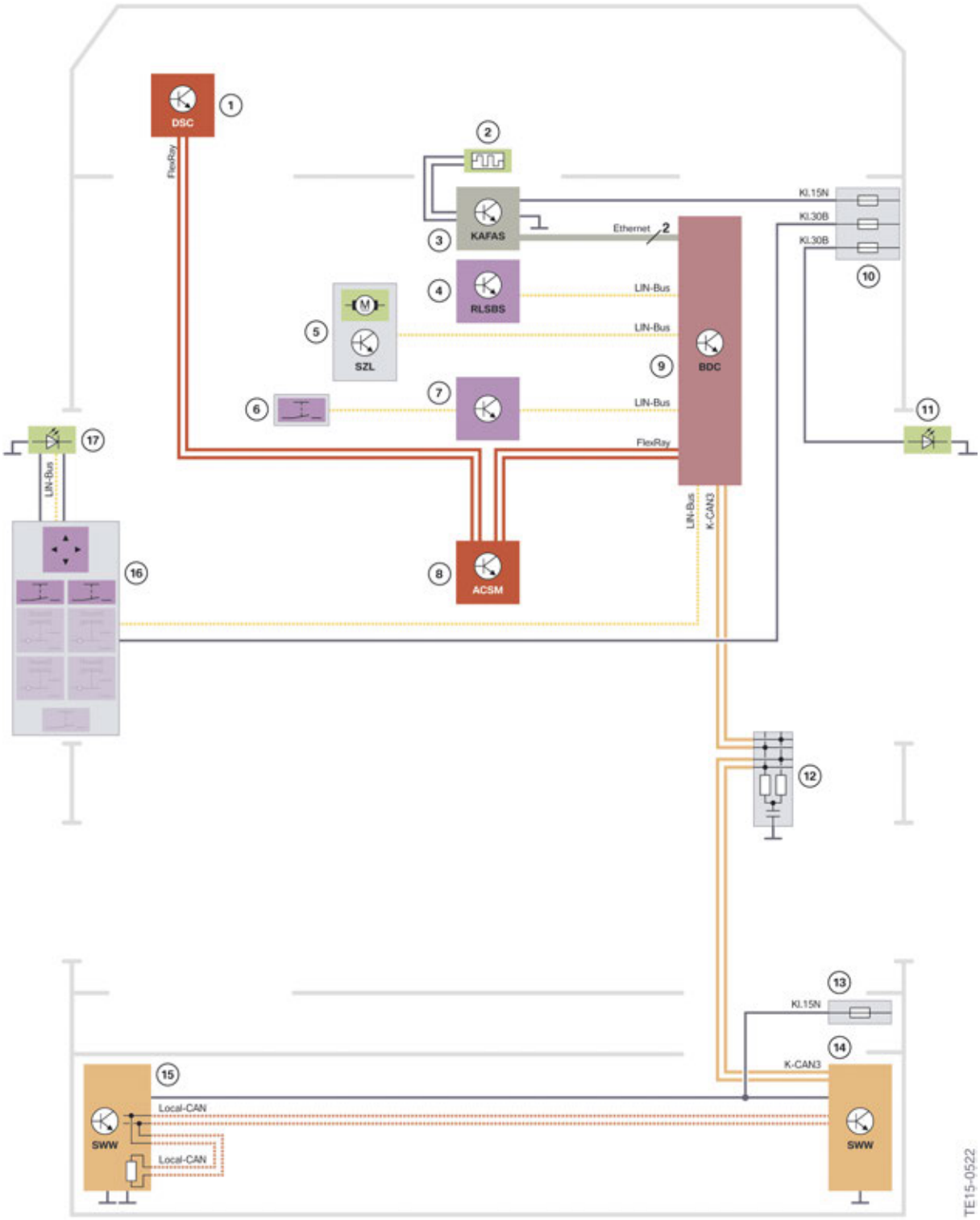

G12 Active Driving Assistant (OE 5AS)/Blind Spot Detection system wiring diagram

Index	Explanation
1	Dynamic Stability Control (DSC)
2	KAFAS stereo camera heating
3	KAFAS stereo camera
4	Rain-light-solar-condensation sensor (RLSBS)
5	Steering column switch cluster (SZL)
6	Intelligent Safety button
7	Audio control panel
8	Advanced Crash Safety Module (ACSM)
9	Body Domain Controller (BDC)
10	Fuse for front right power distribution box
11	Signal unit (LED) in right mirror glass
12	CAN terminator
13	Fuse for rear right power distribution box
14	Blind Spot Detection, left (secondary)
15	Blind Spot Detection, right (primary)
16	Switch block for driver's door
17	Signal unit (LED) in left mirror glass

9.3. Limits of the system

The function of the system may not be available or may only be available to a limited extent in the following situations:

- Heavy fog, rain or snow.
- At sharp bends or on narrow roadways.
- If the bumper is dirty, iced up or stickers are placed over it.
- If the speed of the approaching vehicle is much higher than the driver's speed.

G12 Driver Assistance Systems

10. Side Collision Avoidance

Side Collision Avoidance is part of the Active Lane Keeping Assistant with Side Collision Avoidance. The Active Lane Keeping Assistant with Side Collision Avoidance is part of the scope of supply of the Active Driving Assistant Plus optional equipment (OE 5AT). Side Collision Avoidance is not available separately.

Side Collision Avoidance assists the driver in avoiding a potential side collision.

If an object with which the vehicle could potentially collide, such as a vehicle or a crash barrier, is detected to the side of the driver's vehicle, the driver is assisted in avoiding the potential collision.

Four radar sensors monitor the area next to the vehicle and function regardless of the lighting conditions and largely irrespective of the weather conditions.

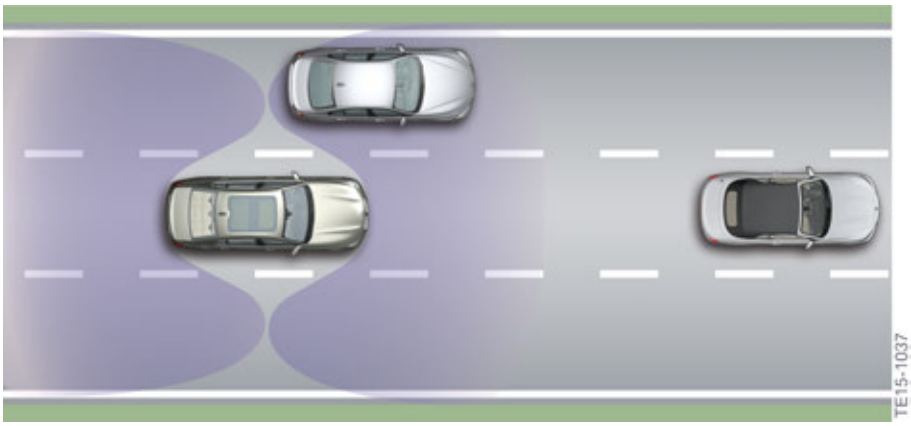

G12 Vehicle detection using radar sensors (Side Collision Avoidance)

If there is a risk of a collision, the corresponding indicator flashes (depending on which side the risk relates to, left or right) in the exterior mirror with high intensity and the steering wheel starts to vibrate.

G12 Signal unit (LED) in mirror glass

An active steering intervention is then initiated, which assists the driver in moving his vehicle back to a safe area within his own lane.

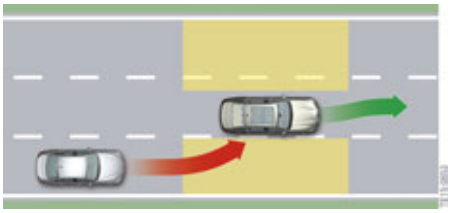

G12 Side Collision Avoidance with active steering intervention in the event of a potential side collision

The steering intervention is initiated within a speed range of between 70 km/h and 210 km/h.

The active steering intervention can be felt on the steering wheel, but can be manually overridden by the driver at any time.

Radar sensors

The rear radar sensors are Blind Spot Detection (SWW) sensors.

G12 Blind Spot Detection (SWW) (radar sensors)

Two additional radar sensors are used for the front Side Collision Avoidance.

G12 Driver Assistance Systems

10. Side Collision Avoidance

G12 Side Collision Avoidance (radar sensors)

Functional prerequisites

A prerequisite for the activation of the Side Collision Avoidance with steering intervention is that the lane markings must be detected by the KAFAS stereo camera.

If the lane markings are not detected or if the driver is driving within the speed range of 30 km/h to 70 km/h, only the Reduced Side Collision Avoidance is active. The warning functions in the form of the flashing indicator in the exterior mirror and the vibration of the steering wheel continue to be implemented.

With the Reduced Side Collision Avoidance there is no active lateral guidance of the vehicle. In this case the driver is only warned by a single steering wheel pulse on the opposite side of the wheel to the danger.

Side Collision Avoidance can be switched on and off in the iDrive menu by making the following selection via the controller:

- "My Vehicle"
- "Vehicle settings"
- "Intelligent Safety"
- "Side Collision Avoidance"

The configuration menu can be accessed quickly by pressing the Intelligent Safety button.

G12 Driver Assistance Systems

10. Side Collision Avoidance

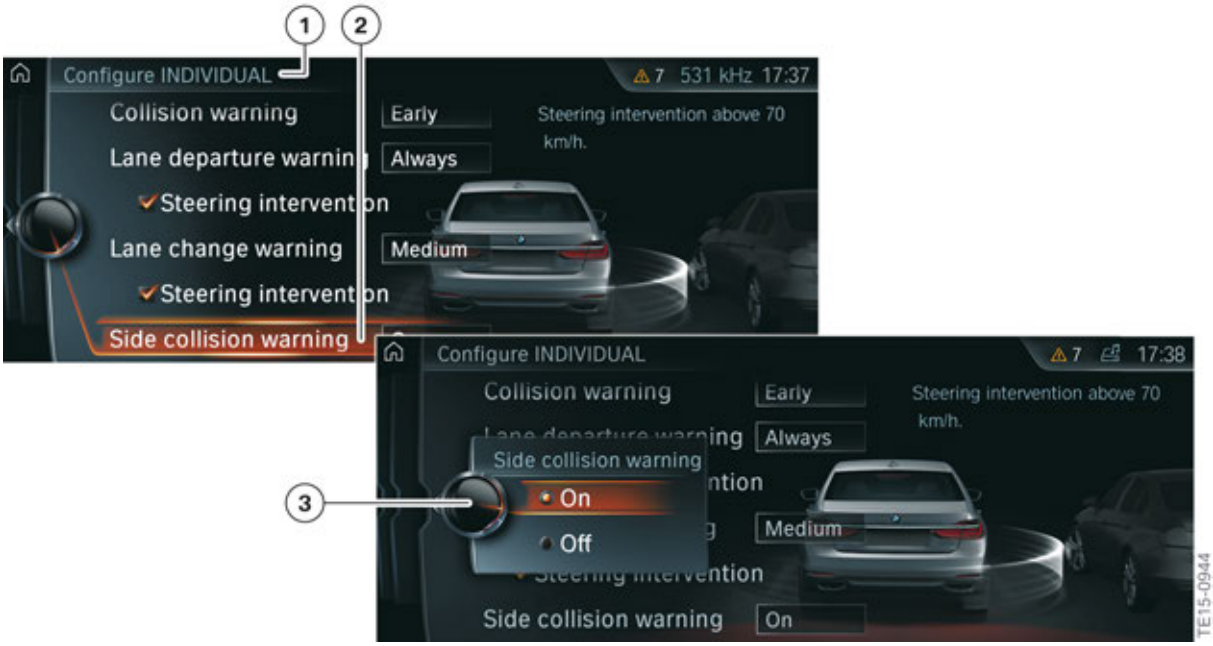

G12 Intelligent Safety view on the CID (Side Collision Avoidance)

Index	Explanation
1	"Configure INDIVIDUAL"
2	"Side Collision Avoidance"
3	"Side Collision Avoidance" (switching the Side Collision Avoidance with steering intervention on and off)

It is not possible to switch off the steering intervention for Side Collision Avoidance separately.

The Side Collision Avoidance automatically activates itself again after the vehicle moves off if the function was switched on at the time of the last engine shutdown.

10.1. Limits of the system

The function of the system may not be available or may only be available to a limited extent in the following situations:

- Heavy fog, rain or snow.
- At sharp bends or on narrow roadways.
- If the bumper is dirty, iced up or labels are placed over it.
- If driving at close proximity to a vehicle driving ahead.
- If the speed of the approaching vehicle is much higher than the driver's speed.

G12 Driver Assistance Systems

11. Road Sign Recognition

Road Sign Recognition displays Speed Limit Information. Speed limit signs are detected by the Road Sign Recognition system and displayed in the instrument cluster or the Head-Up Display in the form of road sign symbols.

Speed limit symbol shown in the instrument cluster

Index	Explanation
1	Road Sign Recognition (example: a detected speed limit sign is displayed)

The display of road signs is based on the evaluation of data from the navigation system and the evaluation of image data recorded by the KAFAS stereo camera.

The KAFAS stereo camera detects road signs at the edge of the road and also the variable displays of road sign holders.

The system takes the information stored in the navigation system into account and displays existing top speed limits on sections of road without signage.

Road Sign Recognition (Speed Limit Information) is part of the Active Driving Assistant optional equipment (OE 5AS) in the G12.

⚠

The system does not relieve the driver of personal responsibility for correctly judging the visibility and traffic situation. The driver is solely responsible for the vehicle and the speed at which it is driven.

G12 Driver Assistance Systems

11. Road Sign Recognition

11.1. Operation

The Road Sign Recognition can be switched on and off in the iDrive menu by making the following selection via the controller:

- "My Vehicle"
- "System settings"
- "Displays"
- "Instrument Cluster"
- Apply desired settings

11.2. Limits of the system

Road signs for speed limits that do not comply with the legal standard are not always detected. The same also applies for speed limit signs which are fully or partially covered by labels, dirt or vegetation. Long distances to the road sign, high driving speeds and poor weather conditions, particularly at night, make it more difficult for the system to recognize road signs reliably. To ensure the current speed limits are displayed as accurately as possible, the data of the navigation road map should be up-to-date.

The functionality of the Road Sign Recognition may be impaired in the following situations and may lead to incorrect information being displayed:

- Heavy fog, rain or snow.
- If signs are covered by objects.
- If driving at close proximity to a vehicle driving ahead.
- Strong light in the camera lens.
- If the windscreen in front of the interior mirror is misted over, soiled or covered by stickers, etc.
- As a result of incorrect detection by the camera.
- If the speed limits stored in the navigation system are incorrect.
- In areas not covered by the navigation system.
- In the event of deviations from the navigation, e.g. due to modified road layouts.
- When overtaking buses or trucks with speed limit stickers.
- If road signs do not correspond to the standard.
- When calibrating the camera immediately after vehicle delivery.

11. Road Sign Recognition

Road signs on parallel, branching-off or merging roads and on exits

Parallel roads are not recognized, neither by the KAFAS stereo camera nor with the help of the navigation map. Signs on these roads can be recognized and displayed as speed limits for the current road.

Speed limits for forking or emerging roads are generally also assumed and displayed for the current road.

Speed limits for exits off highways with or without an arrow as an additional character are generally evaluated correctly and suppressed in the display if driven past. This is only the case if the data on the navigation map is up-to-date.

In the case of road sign holders on the highway with different, lane-dependent speed limits, the speed limit which is closest to the vehicle's lane is displayed. There is no adaptation of the display after a later lane change.

Stickers on vehicles

Stickers with a speed limit on vehicles ahead or overtaken, such as trucks, buses, trailers or construction machinery, etc., may be incorrectly recognized as a currently valid speed limit and displayed.

Town/city limits

If the sign for the entrance to a village/town is not clearly recognized and the data from the navigation map is not up-to-date, the speed limit at the entrances to and exits from villages/towns may be displayed incorrectly.

Legal changes

If legally prescribed maximum speeds change, then these are only available after a software update. Up until the update the original/current but no longer valid speed limits are displayed.

⚠

The system does not replace the personal assessment of the traffic situation. Due to system restrictions and functional limitations, it may transpire that warnings and orders are not issued, are issued too late or are unwarranted. The Road Sign Recognition supports the driver and does not replace the human eye.

G12 Driver Assistance Systems

12. Proactive Driving Assistant

The Proactive Driving Assistant points out to the driver the ideal time at which to release the accelerator in order to reduce consumption, thus enabling the driver to save fuel.

Data from the navigation system is evaluated as the basis for the calculation. Using this data, sections of road ahead that require a reduction in speed can be detected in good time.

Relevant sections of road are:

- Intersections
- Bends
- Crossroads
- Roundabouts
- Entrances to towns
- Top speed limitations
- Highway exits

The Proactive Driving Assistant function is available in the G12 in conjunction with the Navigation System Professional optional equipment (OE 609).

To ensure the coasting function is used to its full potential, the Proactive Driving Assistant takes into account whether coasting is currently possible and adapts the time that the information is issued accordingly. The Proactive Driving Assistant actively cancels coasting if it is possible to reach a section of road ahead in coasting overrun mode.

The Proactive Driving Assistant helps drivers who are not familiar with the route or area to drive more efficiently.

G12 Proactive Driving Assistant displays in the instrument cluster

An indicator in the instrument cluster or Head-Up Display (only with optional equipment OE 610) alerts the driver that he is on a section of road relevant for the Proactive Driving Assistant and gives him the option to react accordingly.

The driver can activate or deactivate the indicator in the Head-Up Display separately.

G12 Driver Assistance Systems

12. Proactive Driving Assistant

The alert is issued even if the section of road ahead cannot yet be seen by the driver. This information is displayed in the instrument cluster or Head-Up Display (optional equipment OE 610) until the road section is reached. If the vehicle is decelerated considerably before reaching the road section, the indicator goes out before the section is reached.

Proactive Driving Assistant symbol in the instrument cluster and Head-Up Display

The maximum length of road section that can be displayed is restricted to approximately 1500 m.

An additional symbol displays the detected road section in the instrument cluster.

Display in the instrument cluster (additional symbol)	Display in Central Information Display	Explanation
		Cornering situation on the route
	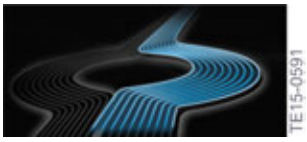	Roundabout on the route
	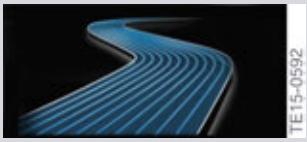	Stretch of road with bends
	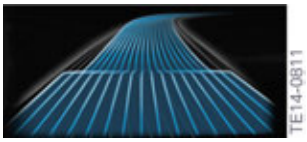	Speed limit on the route

In the driving style analysis display on the Central Information Display information is shown when a corresponding road section lies ahead.

G12 Driver Assistance Systems

12. Proactive Driving Assistant

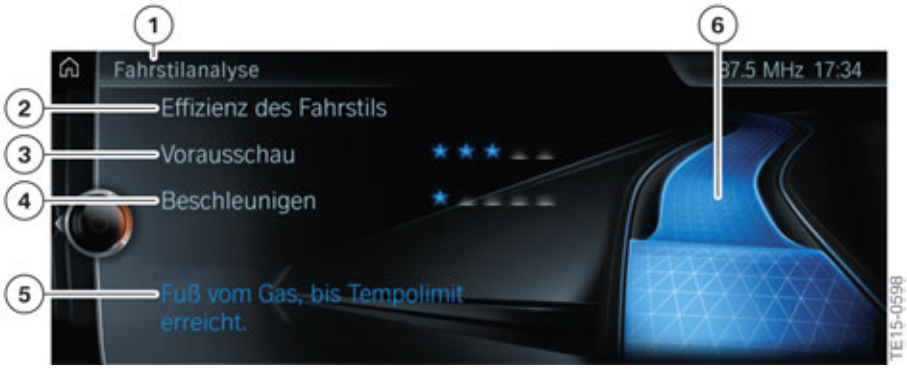

Driving style analysis display in Central Information Display

Index	Explanation
1	"Driving style analysis" menu
2	Efficiency of driving style table of values
3	Forecast table of values
4	Acceleration table of values
5	Display of ECO PRO tips
6	Symbolized road route

In the driving style analysis view the driver also has the option of displaying information on his driving style.

The ECO PRO driving style analysis display consists of a symbolized road route and a table of values. The road symbolizes the efficiency of the driving style. The more efficient the driving style the smoother the route. The table of values contains stars. The more efficient the driving style, the more stars there are in the table and the quicker the bonus range increases.

ECO PRO notes are displayed during the journey as support for an efficient driving style.

G12 Driver Assistance Systems

12. Proactive Driving Assistant

12.1. Operation

To use the Proactive Driving Assistant, ECO PRO mode or ECO PRO+ mode must be activated via the driving experience switch.

G12 Switch block with driving experience switch

The Proactive Driving Assistant can be switched on and off in the ECO PRO configuration menu.

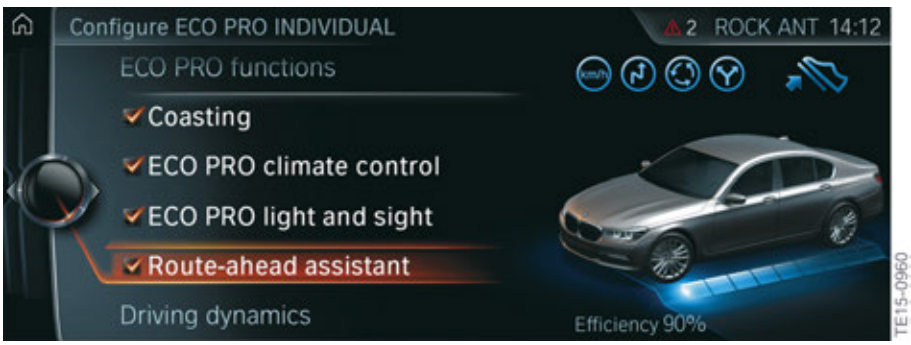

G12 ECO PRO view in the CID settings menu

To call up the display of the driving style analysis, make the following selection via the controller:

- "My Vehicle"
- "Technology in action"
- "Driving style analysis"

Driving style analysis view on the CID

The Proactive Driving Assistant can be used when the route guidance is either active or inactive. When the route guidance is not active, the most likely route is used for evaluation. However, the calculation can be performed more accurately, and therefore more efficiently, when the route guidance is active.

The reliability of the system depends on the up-to-dateness and quality of the navigation data.

12.2. Limits of the system

The Proactive Driving Assistant is not available in the following situations:

- Speed below 50 kph.
- Temporary and variable top speed limitation, such as on building sites.
- Quality of navigation data insufficient.
- Cruise control active.
- Trailer towing.

G12 Driver Assistance Systems

13. Alertness Assistant

The attentiveness assistant helps to avoid accidents caused by tiredness on long, monotonous journeys. It is part of the Active Protection equipment (OE 5AL) included in the basic equipment.

A change in the driver's driving behavior is perceived by the attentiveness assistant. In the event of increasing inattentiveness or if the driver is tired, the alertness assistant shows a display recommending that the driver take a break as a Check Control message in the Central Information Display (CID).

The alertness assistant is automatically active after each engine start from a speed of roughly 70 km/h. If the system is active, a driving behavior profile is created at the beginning of a journey. The following criteria are taken into consideration:

- Personal driving style, for example the steering behavior
- Driving conditions, for example the time or journey duration
- Breaks during a long journey
- Journey duration

13.1. Operation

If the changed driving behavior differs noticeably from the taught-in driving behavior of the alertness profile, the alertness assistant shows a break recommendation in the Central Information Display (CID).

While the display is shown on the CID the following settings can be selected using the controller:

- "Do not ask again"
- "Places to stop"
- "Remind me later" (in this case the break recommendation appears again after a journey duration of 20 minutes)

The break recommendation is only displayed once during an uninterrupted journey (except when "Remind later" is selected).

After a break a new break recommendation is not shown during the next 45 minutes of the journey. The system is reset if a break is longer than 50 minutes or if the break lasts longer than the last driving time. The driving behavior is re-taught.

The attentiveness assistant can be switched on and off in the iDrive menu. The driver can also set the level of sensitivity in this menu by making the following selection via the controller:

- "My Vehicle"
- "Vehicle settings"
- "Attentiveness Assistant"
- Select desired settings

G12 Driver Assistance Systems

13. Alertness Assistant

Alertness assistant display on the CID

Index	Explanation
1	"Attentiveness Assistant" menu
2	Additional note for the driver
3	"Sensitive"
4	"Standard"
5	"Off"

The settings differ from one another as follows:

Selected setting	Explanation
"Sensitive"	The break recommendation is issued earlier (significantly more sensitive or in other words earlier output compared to the "Standard" setting).
"Standard"	The break recommendation is issued with a defined value (in the same way as for BMW models up to now).
"Off"	A break recommendation is not issued.

13.2. Limits of the system

The functionality may be impaired in the following situations and no warning or an incorrect warning may be issued:

- If the clock is set incorrectly.
- If the speed is predominantly below approximately 70 km/h.
- If the driver adopts a sporty driving style, for example rapid acceleration or fast cornering.
- In active driving situations, for example frequent lane changes.
- Poor road condition.
- Strong crosswind.

⚠

The system does not relieve the driver of personal responsibility for correctly judging his physical condition. Increasing inattentiveness or fatigue may not be detected at all or in time.

G12 Driver Assistance Systems

14. Night Vision

In the G12, the Night Vision system is available in the form of BMW Night Vision with person and animal recognition optional equipment (OE 6UK).

Night Vision detects people and animals in optimum conditions at night up to a distance of approximately 100 m away and therefore assists the driver especially on dark and difficult stretches of road, such as when driving on single-lane roads with adjacent woods.

In potentially dangerous situations, the system warns the driver of people and animals on the road.

The Night Vision camera integrated in the BMW radiator grille records the area in front of the vehicle and sends the data to the Night Vision Electronics (NVE).

G12 Night Vision camera

Heating is switched on to avoid ice forming on the camera at temperatures below 5° C.

The image data is analyzed by the Night Vision Electronics control unit and the corresponding image information is sent to the head unit via the Color Video Blanking Signal.

G12 Night Vision Electronics (NVE) control unit

G12 Driver Assistance Systems

14. Night Vision

Hot objects with outlines that resemble people or animals are detected by the system and can be displayed on the CID if necessary.

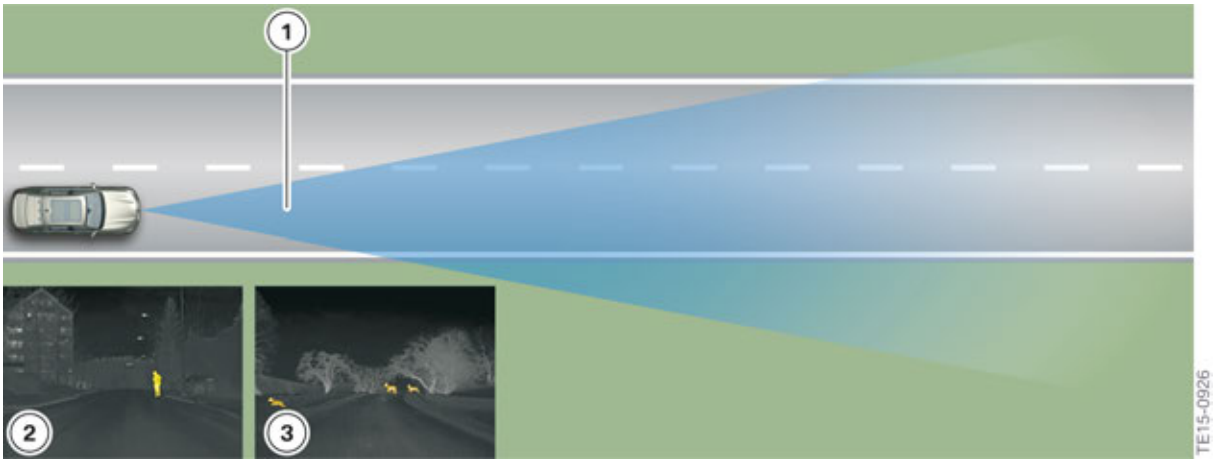

G12 Night Vision detection range

Index	Explanation
1	Night Vision camera detection range
2	Night Vision camera image showing detected person (display on the CID)
3	Night Vision camera image showing detected animals (display on the CID)

Object detection range

- Person recognition: up to about 100 m
- Recognition of large animals: up to about 150 m
- Recognition of medium-sized animals: up to about 70 m

Night Vision detects people and determines their position and distance from the vehicle. Taking into account the driving speed and steering angle, the system calculates whether there is a potential risk and displays a warning sign (early warning) in the instrument cluster and in the Head-Up Display, if present.

In critical situations a warning signal also sounds (acute warning).

The warning threshold values are also dependent on whether the person or the animal is moving or standing still. This is highlighted in the following graphic.

Early warning

The early warning is effected if a person or animal is detected inside the warning range. The early warning shows, depending on the location of the person or animal, a person or animal in yellow which is located inside the actual lane or is moving into the lane. Animals from a certain height can be detected, for example deer.

G12 Driver Assistance Systems

14. Night Vision

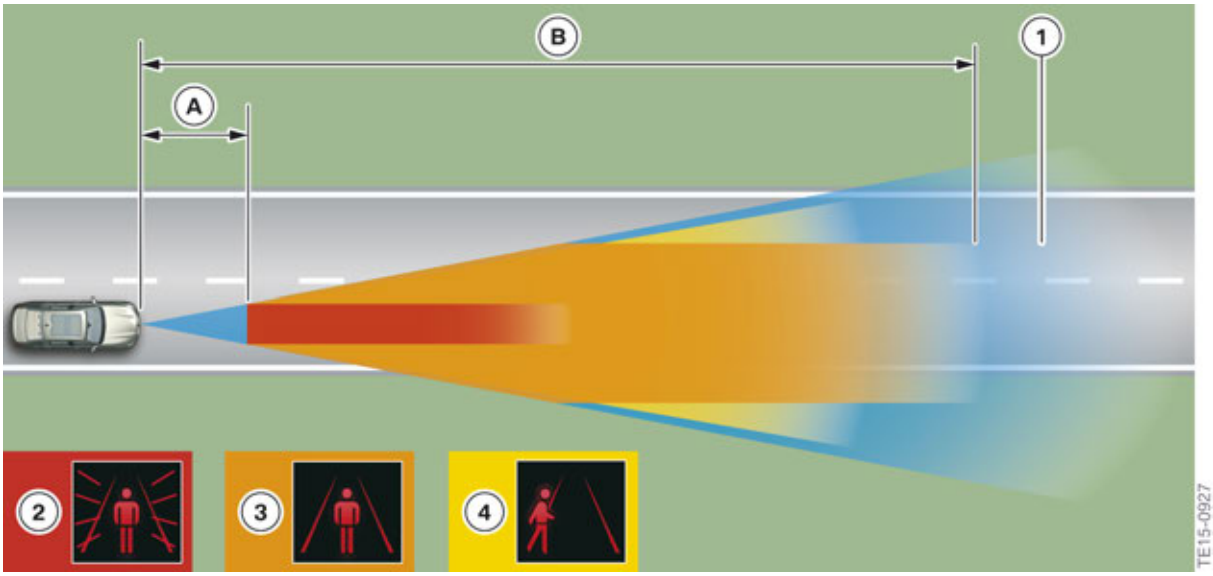

G12 Night Vision warning ranges (early warning)

Index	Explanation
A	Minimum distance about 8 m
B	Maximum distance for early warning of pedestrians about 100 m (the length depends on the driving speed)
1	Detection range of the Night Vision camera (opening angle about 24°)
2	Acute warning range when a person is detected
3	Warning range, early warning (person on the roadway)
4	Warning range, early warning (person crosses the roadway)

Acute warning

The acute warning is only effected in the case of immediate danger of a collision. The time of the acute warning is measured so that a collision can only be avoided by immediate emergency braking or by swerving. With the acute warning the brakes of the vehicle are prepared for emergency braking.

The acute warning in the instrument cluster and in the Head-Up Display shows a red flashing person or animal symbol on the roadway. In addition, an acoustic warning signal is sounded.

G12 Driver Assistance Systems

14. Night Vision

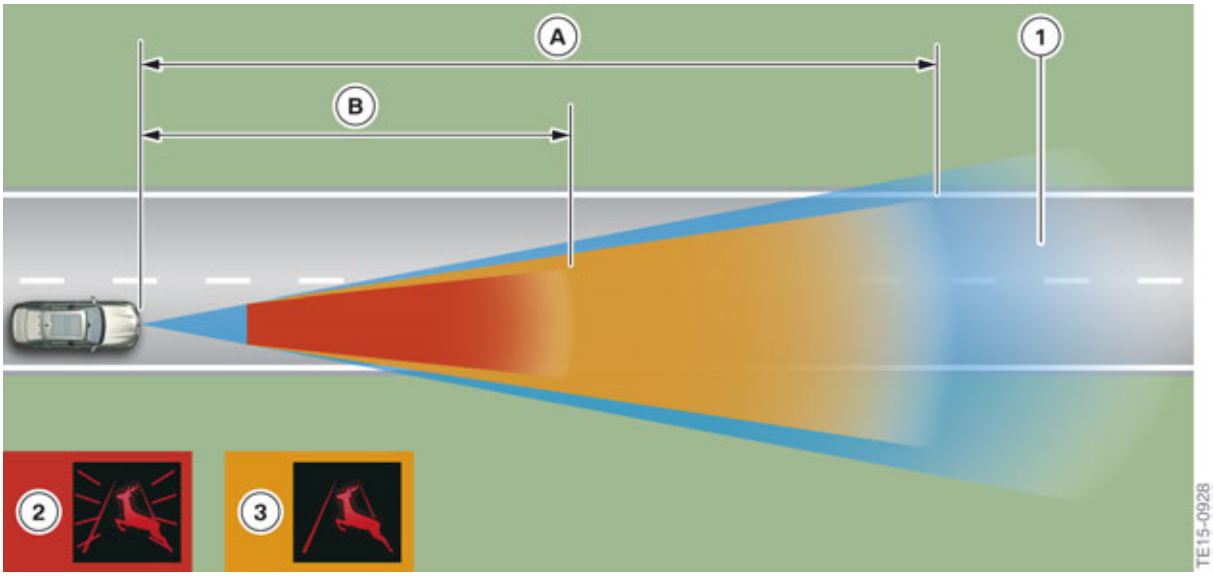

G12 Night Vision warning ranges (acute warning)

Index	Explanation
A	Maximum distance for early warning of animals about 160 m (the length depends on the driving speed and the size of the animal detected)
B	Maximum distance for acute warning of animals about 100 m (the length depends on the driving speed and the size of the animal detected)
1	Detection range of the Night Vision camera (opening angle about 24°)
2	Acute warning range when an animal is detected
3	Early warning range (the width of the detection range depends on the size of the animal and how it is moving)

Display in the CID

The pedestrian or animal warning is effected irrespective of the representation of the Night Vision camera image in the Central Information Display (CID).

The warning is no longer shown on the CID, but instead only appears in the instrument cluster and on the Head-Up Display. If the Night Vision camera image is active, identified pedestrians and animals are shown in yellow.

Night Vision camera image on the CID showing detected people

G12 Driver Assistance Systems

14. Night Vision

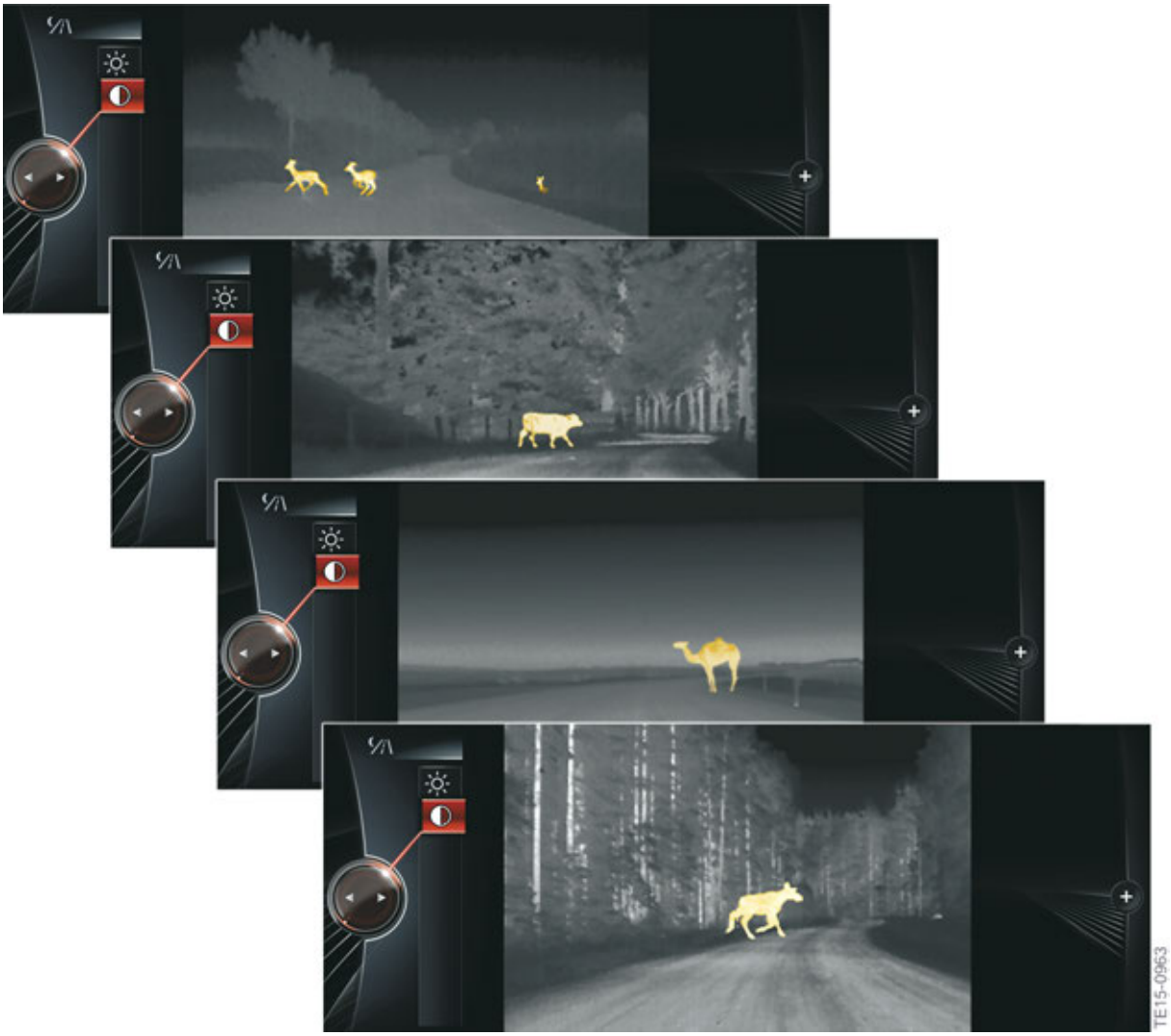

Night Vision camera image on the CID showing detected animals

G12 Driver Assistance Systems

14. Night Vision

14.1. System wiring diagram

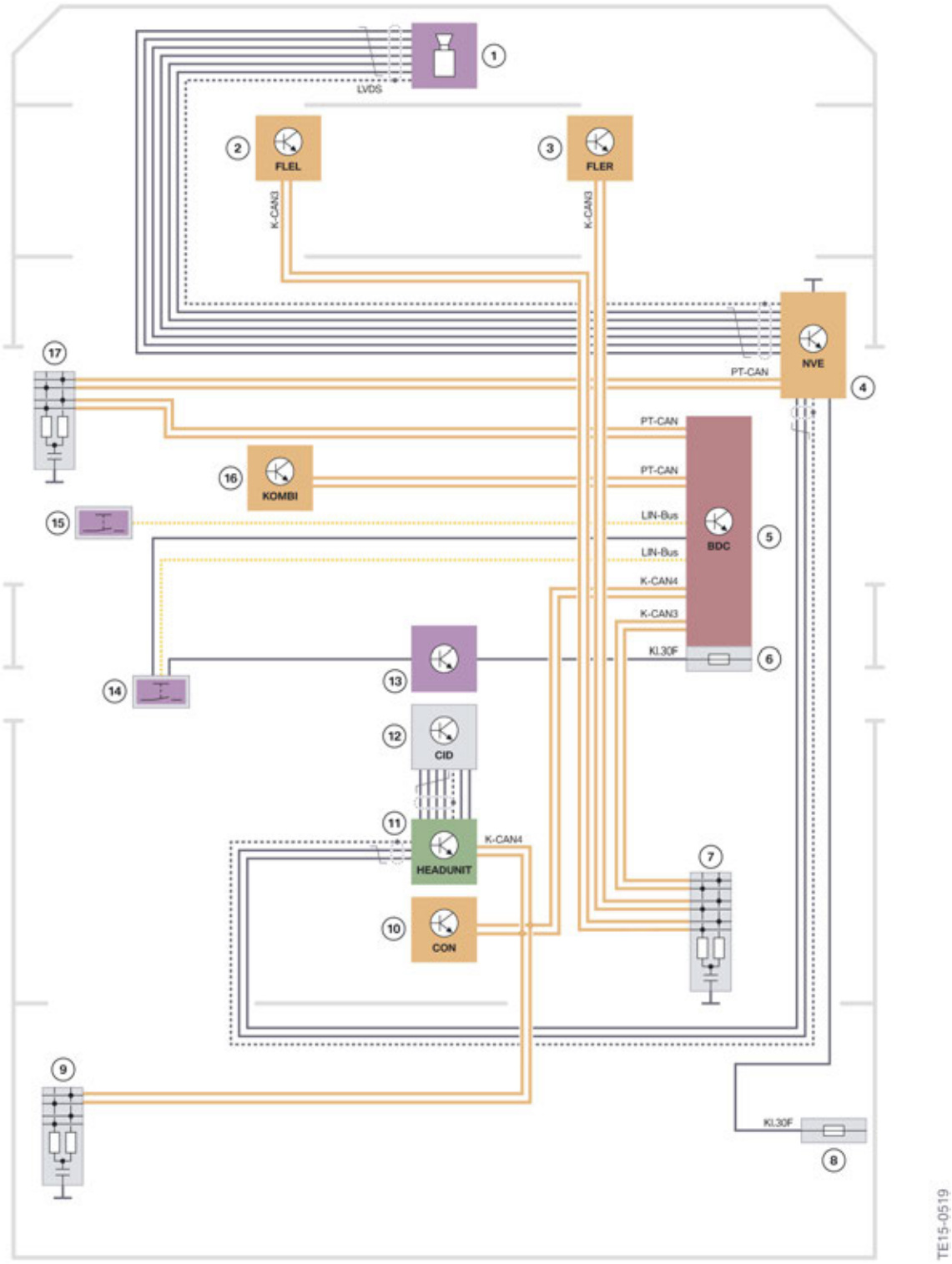

G12 Night Vision system wiring diagram

G12 Driver Assistance Systems

14. Night Vision

Index	Explanation
1	Night Vision camera
2	Frontal Light Electronics, Left (not used with the US NVE system)
3	Frontal Light Electronics, Right (not used with the US NVE system)
4	Night Vision Electronics (NVE)
5	Body Domain Controller (BDC)
6	Fuse in the Body Domain Controller (BDC)
7	CAN terminator
8	Fuse for rear right power distribution box
9	CAN terminator
10	Controller (CON)
11	Head Unit High 2
12	Central Information Display (CID)
13	Audio control panel
14	Intelligent Safety button
15	Light operating unit with integrated button for Night Vision
16	Instrument panel (KOMBI)
17	CAN terminator

14.2. Operation

Night Vision is automatically switched on every time the vehicle sets off when it is dark. The warning functions are therefore issued irrespective of the view on the Central Information Display. The driver can switch the Night Vision camera display on the CID on and off by pressing the Night Vision button in the light operating unit.

It is also possible to set the brightness and contrast of the Night Vision display via the iDrive.

G12 Button for thermal imaging camera/Night Vision

Index	Explanation
1	Night Vision button

14.3. Limits of the system

The functionality may be impaired in the following situations and no warning or an incorrect warning may be issued:

- On steep summits or dips and tight bends.
- If the camera is dirty or the protective screen is damaged.
- In heavy fog, rain or snow.
- If the outside temperatures are very high.

The person and animal recognition may also be impaired or may not issue the usual warnings. This can occur in the following cases:

- If the person or animal is fully or partially hidden, particularly the head.
- If the person is not in an upright position, e.g. if they are lying down.
- If a bike has non-conventional wheels, e.g. recumbent bicycle.
- If the system has been affected mechanically, e.g. after an accident.

In certain cases small animals may be entirely visible on the CID, but may not be identified by the object detection. As a consequence, a warning is also not issued.

⚠

The system does not relieve the driver of personal responsibility for correctly judging the visibility and traffic situation. The driver is solely responsible for the vehicle and the speed at which it is driven.

G12 Driver Assistance Systems

15. Cameras

The optional equipment Surround View (OE 5DL) is part of Driver Assistance Plus ZDB package and provides support when parking, maneuvering, as well as at unclear exits and crossroads. In the G12, the Surround View optional equipment (OE 5DL) is only available in conjunction with the rear view camera optional equipment (OE 3AG).

Panorama View is part of the Surround View optional equipment (OE 5DL).

The rear view camera is available as standard equipment (OE 3AG).

15.1. Surround view

The Surround View optional equipment (OE 5DL) shows the vehicle surroundings and displays them in TOP View and 3D View on the Central Information Display.

The system comprises the front camera, the two cameras integrated in the exterior mirrors, the rear view camera (RFK) and the Top Rear Side View Camera (TRSVC) control unit. The cameras record the area from various, selectable angles and send this information to the TRSVC control unit via Ethernet. The images from the four cameras are combined into a panorama view around the vehicle from different angles using 3D computer graphics. The video signals are transmitted from the TRSVC control unit via an Ethernet line to the head unit. From there the video signal is transmitted to the Central Information Display via an Automotive Pixel Link line. The driver can choose from preset views or can freely select the view (for example tow bar zoom and car wash entrances).

In addition, assistance functions such as guidance lines can be shown on the CID.

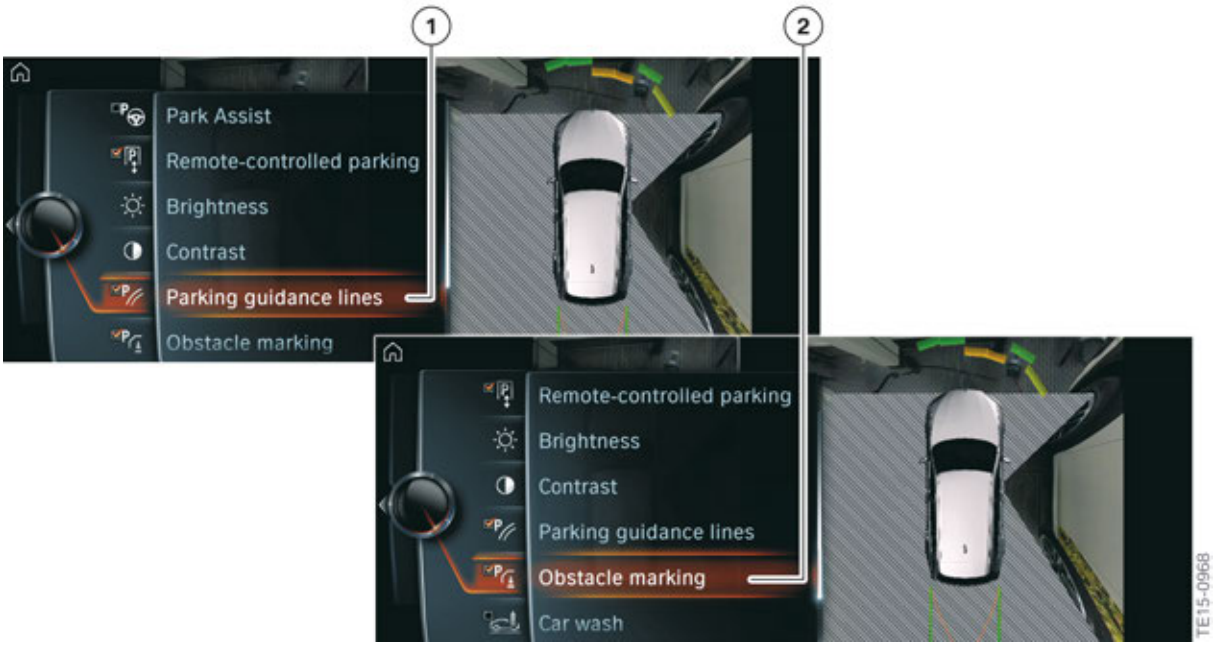

G12 Configuration menu view for Obstacle marking and Parking assistance lines on the CID

Index	Explanation
1	"Parking assistance lines"
2	"Obstacle marking"

G12 Driver Assistance Systems

15. Cameras

The following camera angles can be displayed:

- Automatic camera angle
- Side view
- Front camera
- Panorama View
- Reversing camera
- Moving camera angle

15.1.1. Automatic camera angle

The system automatically shows the most appropriate camera angle depending on the driving situation, thus providing the driver with optimum assistance when parking and maneuvering. The automatic camera angle shows a steering-dependent view and takes into account the respective direction of travel and the distance information from the Park Distance Control (PDC).

As soon as obstacles are detected, the view changes to a fixed display of the area in front of or behind the vehicle, or changes to the corresponding side view if required.

15.1.2. Side view

This view helps the driver to position the vehicle next to the curb or other obstacles at the side of the vehicle by displaying the side surroundings. The side view is from the rear to the front and automatically focuses on potential obstacles if there is a collision risk.

Both the left and right sides of the vehicle are recorded.

15.1.3. Front camera

The front camera supports the driver when parking and maneuvering. The area in front of the vehicle is recorded by the front camera and shown on the Central Information Display. The front camera view cannot be selected separately. The driver must select the "Auto" camera angle to view it or if desired, switch on the "Panorama View" function (see next section).

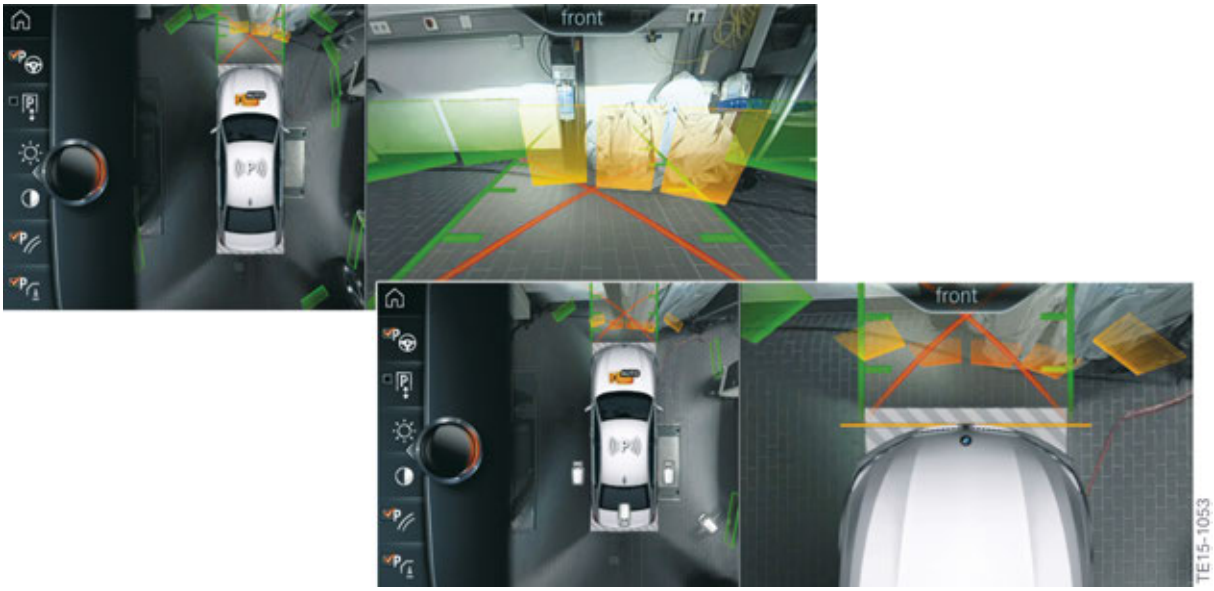

G12 Front camera view on the CID

Areas around the vehicle that are not visible due to the camera angle of view are shown with grey crosshatching.

15.1.4. Panorama View

Panorama View enables the driver to see the cross traffic at blind exits and intersections before proceeding and provides the driver with optimum assistance in this situation. Road users that are hidden by obstacles to the side of the vehicle are sometimes only seen by the driver very late or not at all. To improve the view, the front and rear view cameras record the lateral roadway area. Depending on which drive position is engaged, the front or rear view camera can be activated.

G12 Panorama View on the CID

Yellow lines in the screen display mark the front and rear ends of the vehicle. The camera image is badly distorted in some areas and is therefore not suitable for estimating distances.

The function can be activated using the Panorama View button. Press the button again to deactivate the function. The Panorama View function is automatically deactivated at speeds above approximately 15 km/h. Panorama View is also deactivated after a drive position change (from "D" to "R" or the opposite).

Panorama View (GPS-based)

The GPS-supported, automatic activation of the Panorama View function has been implemented in the G12.

G12 Automatic switch on at a set activation point

Positions, at which the Panorama View should switch itself on automatically, can be saved as activation points, provided that a GPS signal is received. A maximum of ten activation points can be saved for the front camera.

To save the activation points, the driver must proceed as follows:

- Stop after reaching the place where the Panorama View should switch itself on automatically.
- Press the Panorama View button and then tilt the controller to the left.
- Then select "Add activation point" (the current position is displayed) and confirm by selecting "Add activation point".

G12 Setting activation points

Index	Explanation
1	"Add activation point"

If possible, the activation points are saved with the town/city and street or with the GPS coordinates. The direction of travel is also saved in conjunction with the activation point.

The driver can display the saved activation points on the CID.

G12 Displaying activation points

Index	Explanation
1	"Show activation points"

The use of activation points can be switched on and off via iDrive.

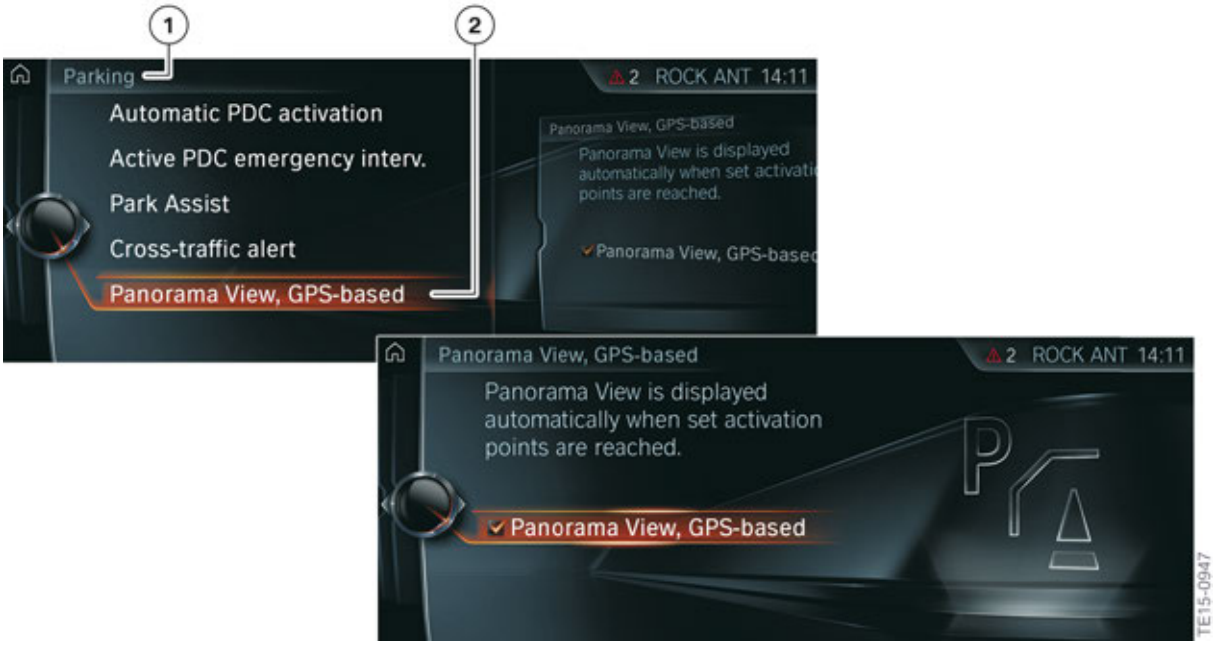

G12 Panorama View activation menu on the CID

Index	Explanation
1	"Parking" menu
2	"Panorama View, GPS-based"

15.1.5. Reversing camera

The rear view camera supports the driver when parking and maneuvering. The area behind the vehicle is recorded by the rear view camera and shown on the Central Information Display.

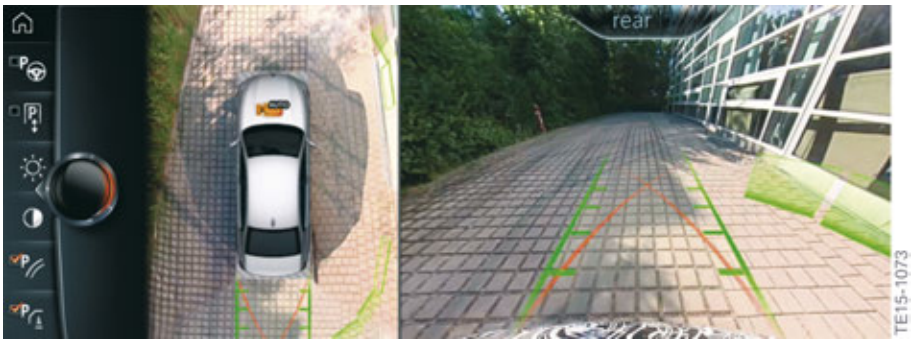

G12 Rear view camera, view on the CID

15.1.6. Moving camera angle

When the moving camera angle is selected, a circular trajectory is shown around the vehicle on the CID. Predetermined angles can be selected on the circular trajectory by turning the controller or using the touch function.

In vehicles with the gesture control optional equipment (OE 6U8), the moving camera angle can also be controlled in this way.

The current angle is identified by a camera symbol. Depending on the view, the surroundings of the vehicle or a partial area of the surroundings are shown on the CID.

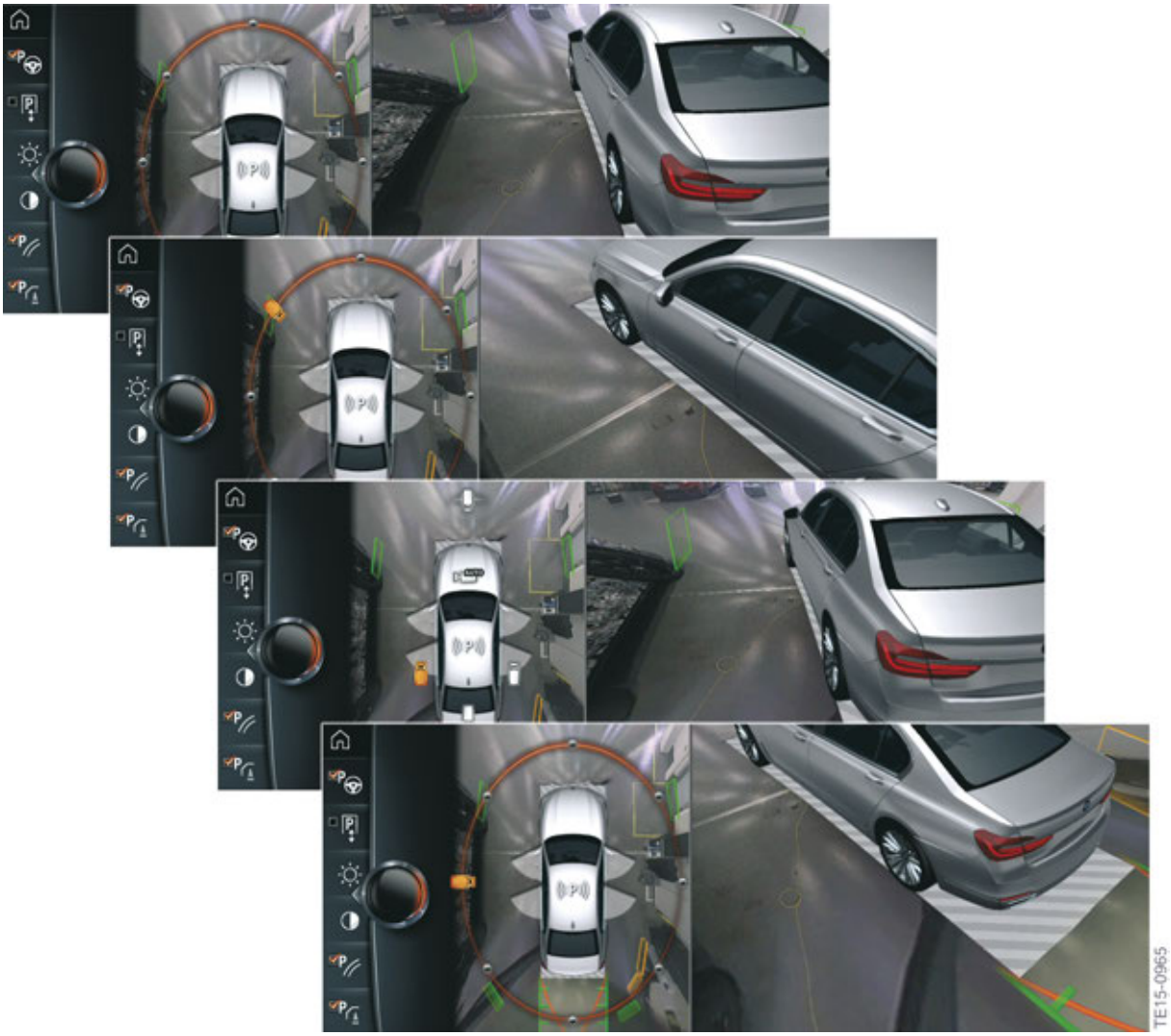

G12 Exterior camera view (moving camera angle) on the CID

To leave this view, tilt the controller to the side, press it or touch the highlighted camera symbol via the touch screen.

If gesture control is being used, the gesture symbol is shown on the right half of the CID screen.

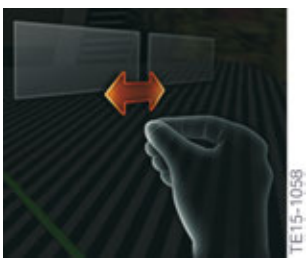

G12 Rotating the camera view using gesture control

G12 Driver Assistance Systems

15. Cameras

15.2. Overview of exterior camera operating menu

Once the camera systems have been activated successfully the driver has the option of selecting the appropriate view or camera via iDrive.

G12 Switch block with Panorama View button

Index	Explanation
1	Parking assistance button
2	Panorama View button

The camera systems can be activated (depending on the vehicle equipment) as follows:

- Manually by pressing the parking assistance button or the camera button (Panorama View).
- By engaging drive position "R".
- Automatically via the "Auto PDC" function .
- Automatically via the GPS-supported automatic activation of the Panorama View function, provided that activation points have been saved.

G12 Driver Assistance Systems

15. Cameras

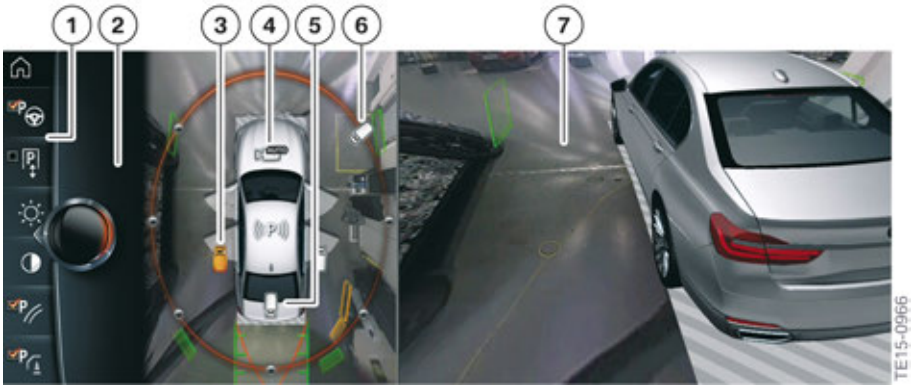

G12 Exterior cameras view (camera angles) on the CID

Index	Explanation
1	Toolbar
2	Selection window
3	Side view
4	Automatic camera angle
5	Reversing camera
6	Moving camera angle
7	Camera image

Other settings and options can be found in the toolbar, depending on the vehicle equipment. The following functions may be available:

- Switching the "Parking Maneuver Assistant" function on and off
- "Brightness" range of adjustment
- "Contrast" range of adjustment
- Switching the "Parking assistance lines" on and off
- Switching the "Obstacle marking" on and off
- Activating the "Car wash" function
- "Settings" menu (various settings can be made, such as use of the activation points with Panorama View)

G12 Driver Assistance Systems

15. Cameras

G12 Operating menu for exterior cameras and Parking Maneuver Assistant

15.3. Assistant function

If required, the driver can receive additional assistance from the "Car wash" functions.

15.3.1. Car wash view

The car wash view assists the driver when entering a car wash. When the car wash view is selected, immediately before entering the car wash, a bird's eye view is displayed on the CID. To enable the driver to align the vehicle more easily, at the same time the vehicle's tire tracks are shown on the display.

The car wash view can be activated via iDrive in the toolbar under the "Car wash" menu item.

G12 PDC car wash view on the CID

Index	Explanation
1	"Car wash"

15.3.2. Side protection

The side protection warns against obstacles at the side of the vehicle and thus supports the driver when parking and maneuvering.

To protect the sides of the vehicle from collisions with obstacles, additional obstacle markings are shown to the side of the vehicle on the CID if necessary, these obstacles are tracked by the nearest camera.

G12 Side protection view (additional obstacle markings)

More information on the side protection function can be found in section 18.

15.3.3. Door opening angle

When the vehicle is stopped and the selector lever position "P" is engaged, the maximum opening angle of the doors is displayed on the Central Information Display.

If there is an obstacle near the door and it is detected by the side protection, this is marked on the Central Information Display. The obstacle marking display only points out objects in the area of the door. It is not possible for a view from the camera systems to be displayed, as the door area is simulated. Therefore, the driver is only informed that there is an object at the side of the vehicle; it is not certain that the door will definitely collide with the identified object. The driver must judge this for himself.

G12 Door opening angle view on the CID

The "Parking assistance lines" and "Obstacle marking" features already used in other BMW models can also be activated and deactivated via iDrive in the toolbar under the relevant menu items.

The camera systems do not relieve the driver of personal responsibility for correctly judging the traffic situation. There is still a risk of an accident. The driver's driving style should be adapted to the traffic conditions. The driver should check the traffic conditions and the vehicle's surroundings by looking around and react accordingly if required.

15.4. System components

Front camera

The front camera is installed in the center between the two front ornamental grills on the G12.

G12 Front camera

Top view camera

The two top view cameras are installed in the exterior mirrors on the G12.

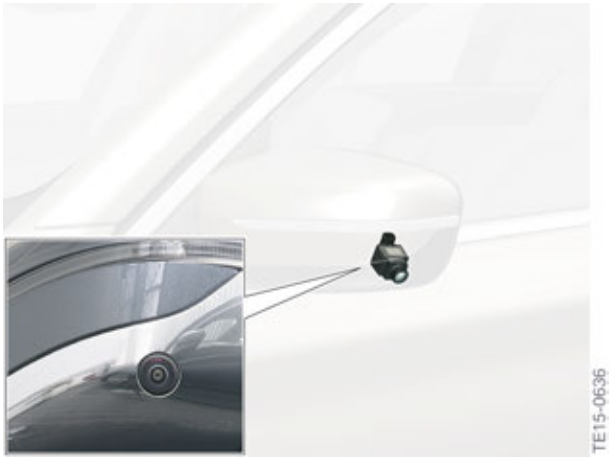

G12 Left top view camera

Index	Explanation
1	Exterior mirror camera

15.4.1. Reversing camera

The rear view camera supports the driver when parking and maneuvering. The area behind the vehicle is shown on the Central Information Display. Guidance lines integrated in the image provide the driver with additional assistance with distances, the turning circle and obstacle markings function, if required.

The driving lane lines are dependent on the steering angle and are continually adjusted when steering wheel movements are made.

The turning circle lines can only be shown in the rear view camera image in conjunction with the driving lane lines. The turning circle lines show the shape of the smallest possible turning circle on an even roadway. From a certain steering-wheel angle, only one turning circle line is shown.

The rear view camera is located in the trunk lid handle strip.

G12 Rear view camera

The control unit is integrated in the rear view camera and is the bus user at K-CAN3. The video signals are transmitted directly to the Head Unit High 2 (HU-H2) via a CVBS line. An Ethernet connection for the rear view camera (on non 5DL cars) is being planned for a later version.

In vehicles with the Surround View optional equipment (OE 5DL) a rear view camera without an integrated control unit is installed. The reversing camera is connected to the TRSVC control unit via Ethernet in vehicles with Surround View (OE 5DL).

15.4.2. TRSVC control unit

The exterior cameras record the area around the vehicle from various angles and send this information to the TRSVC control unit via Ethernet. The video signals are transmitted from the TRSVC control unit to the head unit via an Ethernet line. The head unit transmits the signals to the Central Information Display via an Automotive Pixel Link line.

The installation location of the TRSVC control unit is in the foot well on the driver's side.

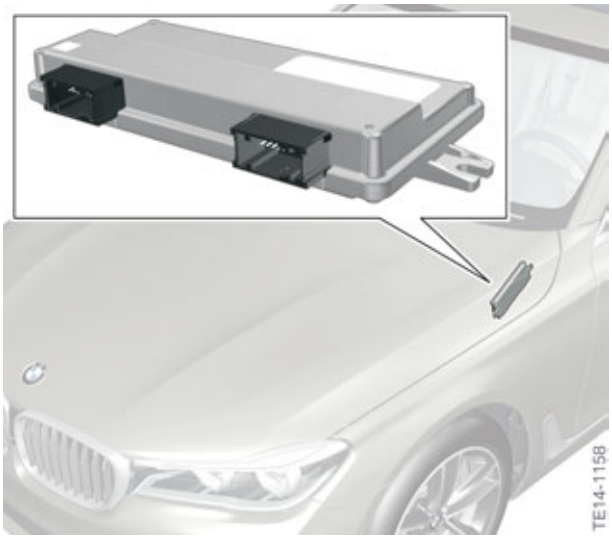

G12 TRSVC control unit

15.5. System wiring diagram

The system wiring diagram on the next page shows an overview of the system components used when parking and maneuvering the vehicle. Depending on the vehicle equipment, partial scopes may also be installed.

G12 Driver Assistance Systems

15. Cameras

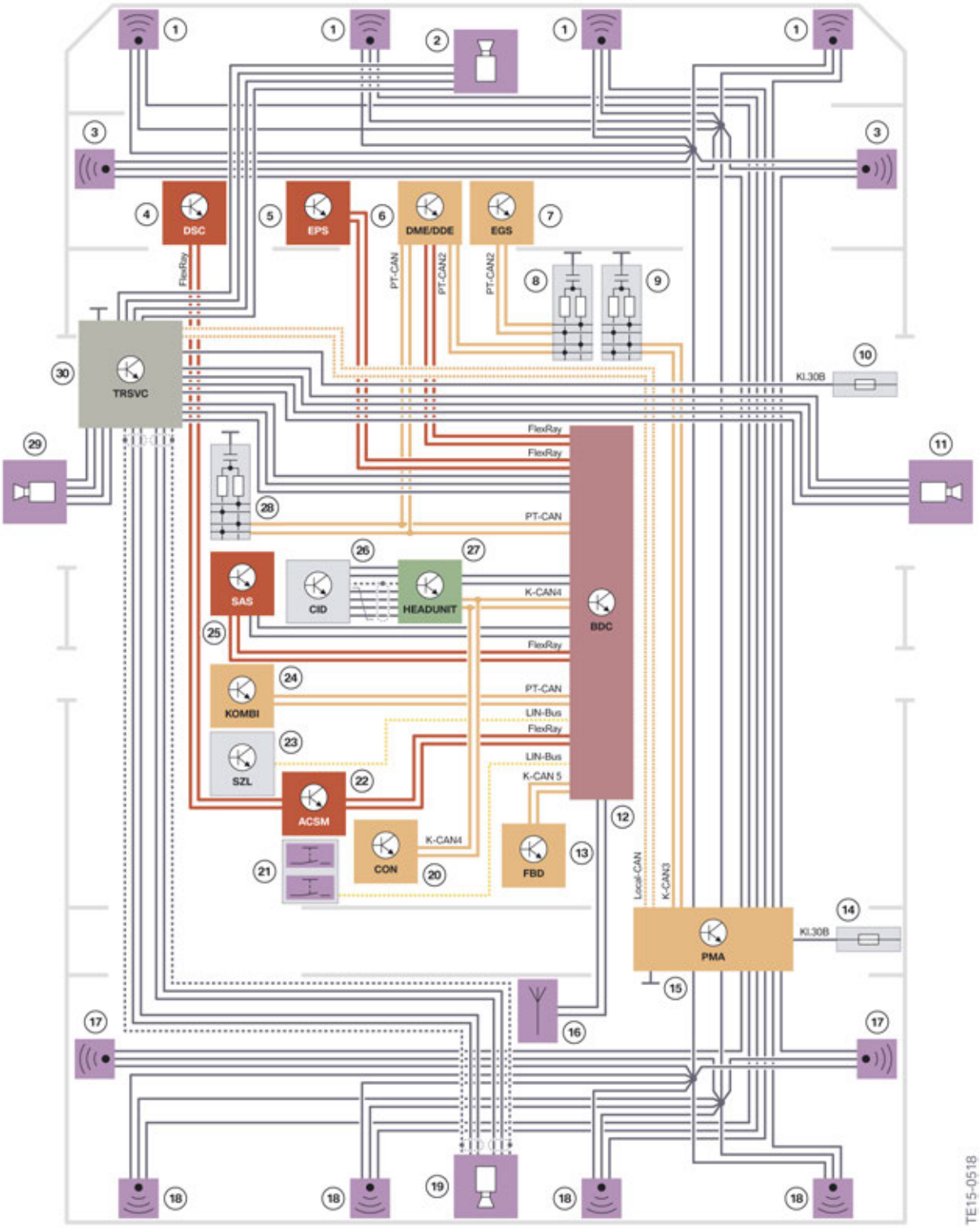

G12 Parking and maneuvering system wiring diagram

G12 Driver Assistance Systems

15. Cameras

Index	Explanation
1	Ultrasonic sensors for Park Distance Control, front
2	Front camera
3	Ultrasonic sensors for Parking Maneuver Assistant
4	Dynamic Stability Control (DSC)
5	Electronic Power Steering (EPS)
6	Digital Motor Electronics (DME)
7	Electronic transmission control (EGS)
8	CAN terminator
9	CAN terminator
10	Fuse for front right power distribution box
11	Right side view camera
12	Body Domain Controller (BDC)
13	Remote control receiver (FBD)
14	Fuse for rear right power distribution box
15	Control unit for Parking Maneuver Assistant (PMA)
16	Remote Control Parking aerial
17	Ultrasonic sensors, Park Distance Control, rear side
18	Ultrasonic sensors, Park Distance Control, rear
19	Rear view camera (RFK)
20	Controller (CON)
21	Parking assistance button and button for camera activation
22	Advanced Crash Safety Module (ACSM)
23	Steering column switch cluster (SZL)
24	Instrument panel (KOMBI)
25	Control unit for optional equipment system (SAS)
26	Central Information Display (CID)
27	Head Unit High 2 (HU-H2)
28	CAN terminator
29	Left side view camera
30	Top rear side view camera (TRSVC) control unit

G12 Driver Assistance Systems

16. Park Distance Control

Park Distance Control (PDC) assists the driver when maneuvering in and out of a parking space. The current distance from an obstruction is indicated by acoustic signals and on a visual display.

G12 Park Distance Control (PDC) view on the CID

The front and rear Park Distance Control (OE 508) is included in the G12 standard equipment.

The distance from an obstruction is measured by four ultrasonic sensors in the rear bumper panel and four additional ultrasonic sensors in the front bumper panel.

16.1. System components

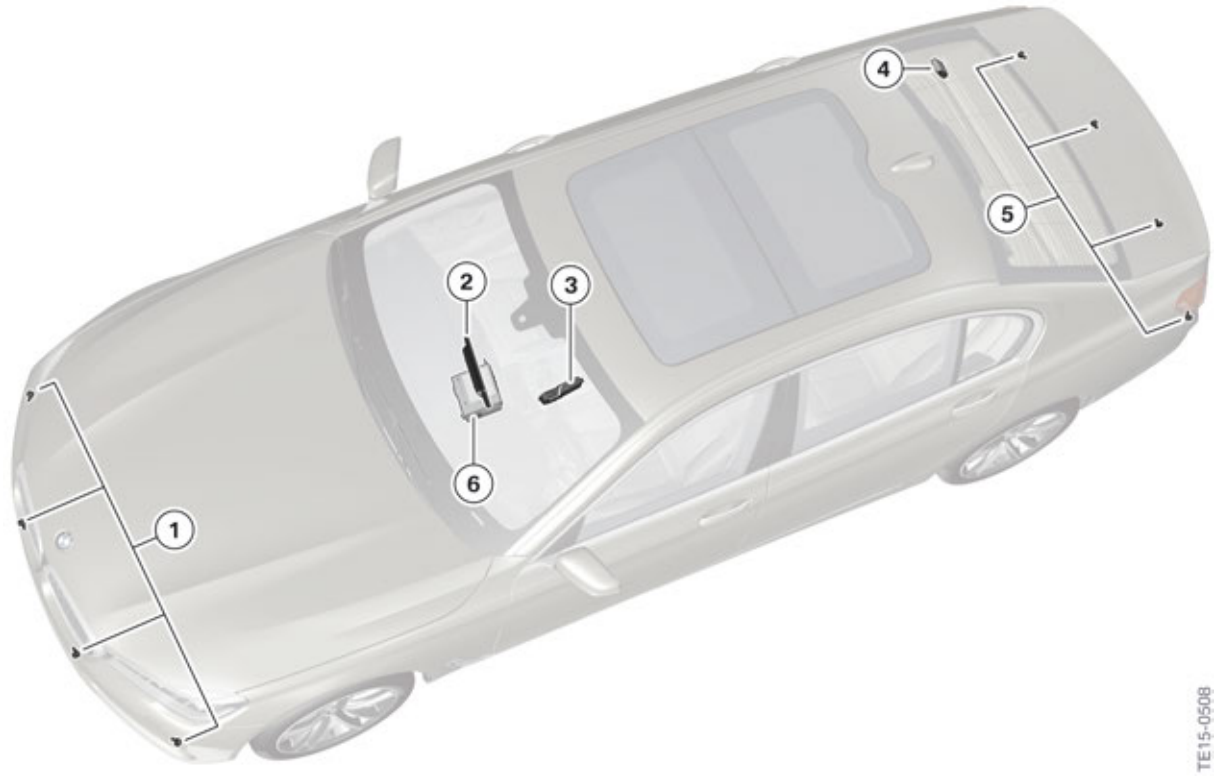

G12 Park Distance Control system components

Index	Explanation
1	Ultrasonic sensors for Park Distance Control, front
2	Central Information Display (CID)
3	Operating unit
4	Control unit for Parking Maneuver Assistant (PMA)
5	Ultrasonic sensors, Park Distance Control, rear
6	Head Unit High 2 (HU-H2)

Vehicles that do not have the Parking Maneuver Assistant but do have the Park Distance Control have a separate control unit, which is recognized as the PMA control unit by diagnosis and is also referred to by this name in the bus diagram. In other words, there is no longer a difference in the naming of the PDC and PMA control unit (there are however differences in the hardware design between the control units and the software is adapted to the equipment specification).

G12 Control unit for Parking Maneuver Assistant (PMA)

16.2. Auto PDC

Automatic activation of the Park Distance Control not only with drive position "R" engaged, but also with "D" engaged, has been implemented in the G12.

Auto PDC is also activated automatically if the vehicle is approaching an object at a speed below approximately 5 km/h.

For example:

The driver is driving along a road at approximately 50 km/h and after some time approaches an entrance gate on the right-hand side of the road. The entrance gate is 2.80 m wide and there is a wall on each side of it. The vehicle turns right to drive into the entrance gate. Let us assume that in this example space is very restricted and given the difficult curve radius the vehicle is approaching the left-hand wall of the entrance gate at a distance of less than approximately 0.6 m. In this case, the Park Distance Control would be activated automatically, if on approaching the wall the speed of the vehicle does not exceed approximately 4 km/h.

G12 Driver Assistance Systems

16. Park Distance Control

The Park Distance Control is activated automatically, if:

- there is an object closer than 0.6 m from the front of the vehicle when driving forwards
- there is an object closer than 1.5 m from the rear of the vehicle when reversing
- the speed driven does not exceed approximately 4 km/h

The PDC view is automatically displayed on the CID. The activation distance of the Park Distance Control depends on the respective situation and therefore may vary.

A sound is only output if the detected object (in front of or behind the vehicle) is directly in the lane (risk of collision). If the detected object is not directly in the lane, there is only visual acknowledgement on the CID.

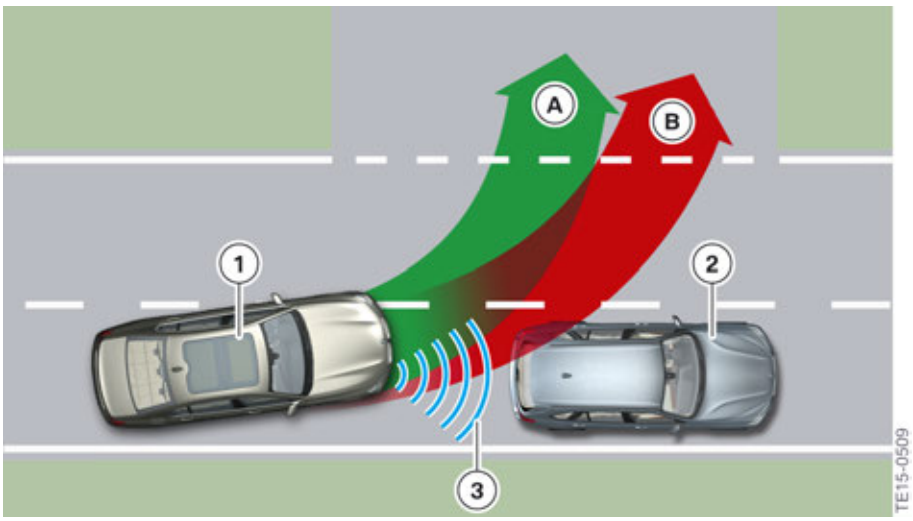

Automatic PDC

Index	Explanation
A	Lane without object contact (the driver receives visual acknowledgement)
B	Lane with object contact (the driver receives visual and acoustic acknowledgement)
1	Turning vehicle
2	Detected object
3	Detection of obstacle by the ultrasonic sensors

If an object has been detected by Auto PDC, the system must be reactivated so that it cannot be accidentally switched on, for example in a car wash. Reactivation is effected by:

- driving speed > 5 km/h
- drive position change

If a drive position change is made into neutral, the Park Distance Control is not activated automatically, again to avoid it being switched on, for example in a car wash.

The automatic switch-on function when obstacles are detected can be switched on and off via iDrive.

16.3. Active Park Distance Control

In G12 vehicles with the Parking Maneuver Assistant optional equipment (OE 5DP), the Park Distance Control function has been extended to include the active Park Distance Control function. This automatically brakes the vehicle to a halt when it is travelling at walking speed (< approximately 6 km/h) if an object is detected behind the vehicle.

If the accelerator pedal is pressed and an obstacle is detected, the brakes are preconditioned and gentle initial braking is initiated as a warning for the driver. If the accelerator pedal is not pressed and the vehicle is very close to the obstacle, the function brakes the vehicle with the maximum possible brake force until it comes to a standstill. This can potentially avoid a collision or reduce the damage.

The automatic brake intervention can be overridden at any time by pressing the accelerator pedal. Consequently, after the vehicle is automatically braked to a standstill, it is possible to continue to approach the obstruction by gently pressing the accelerator pedal.

The active Park Distance Control function can be switched on and off via iDrive.

If the Dynamic Stability Control (DSC) is switched off, then the active Park Distance Control is also deactivated. If the active Park Distance Control is switched on when the Dynamic Stability Control is switched off, the DSC is automatically switched on at the same time.

⚠

The system does not relieve the driver of personal responsibility for correctly judging the traffic situation. The driver should check the traffic conditions and the vehicle's surroundings by looking around and react accordingly if required.

16.4. Side protection

Vehicles with the Parking Maneuver Assistant optional equipment (OE 5DP) have side protection. Obstacles that are detected by the four side ultrasonic sensors integrated in the bumpers can be displayed by the Park Distance Control system.

Display in the Central Information Display (CID)	Meaning
Colored markings	Warning of detected obstacles
Grey markings	The area next to the vehicle has not yet been recorded
No markings	No obstacles have been detected

The system only shows stationary obstacles that were earlier detected by the ultrasonic sensors when driving past.

It is not able to detect whether an obstacle has since moved. For this reason, the markings on the display are shown in grey after the vehicle has been stationary for roughly 13 seconds.

More information on the side protection function can be found in section 18.6.

16.5. Operation

The Park Distance Control system is enabled in the following situations:

- If drive positions R or D are engaged when driving readiness is switched on.
- If the parking assistance button in the switch block next to the controller is pressed when driving readiness is switched on.
- If Auto PDC is activated and all marginal conditions for automatic activation are met (see section 16.2 "Auto PDC").

G12 Switch block with parking assistance button

Index	Explanation
1	Parking assistance button

16.5.1. Auto PDC

Automatic switch-on of this function when obstacles are identified can be switched on and off in the "Settings" menu using the controller. To do this proceed as follows:

- "My Vehicle"
- "Vehicle settings"
- "Parking"
- "Automatic PDC activation"
- Apply desired setting

The setting is stored for the ID transmitter currently being used.

Automatic Park Distance Control on the CID

Index	Explanation
1	"Parking" menu
2	"Automatic PDC activation"

16.5.2. Active Park Distance Control

The active Park Distance Control function can be switched on and off in the "Settings" menu using the controller. To do this proceed as follows:

- "My Vehicle"
- "Vehicle settings"
- "Parking"
- "Active PDC emergency interv."
- Apply desired setting

The setting is stored for the ID transmitter currently being used.

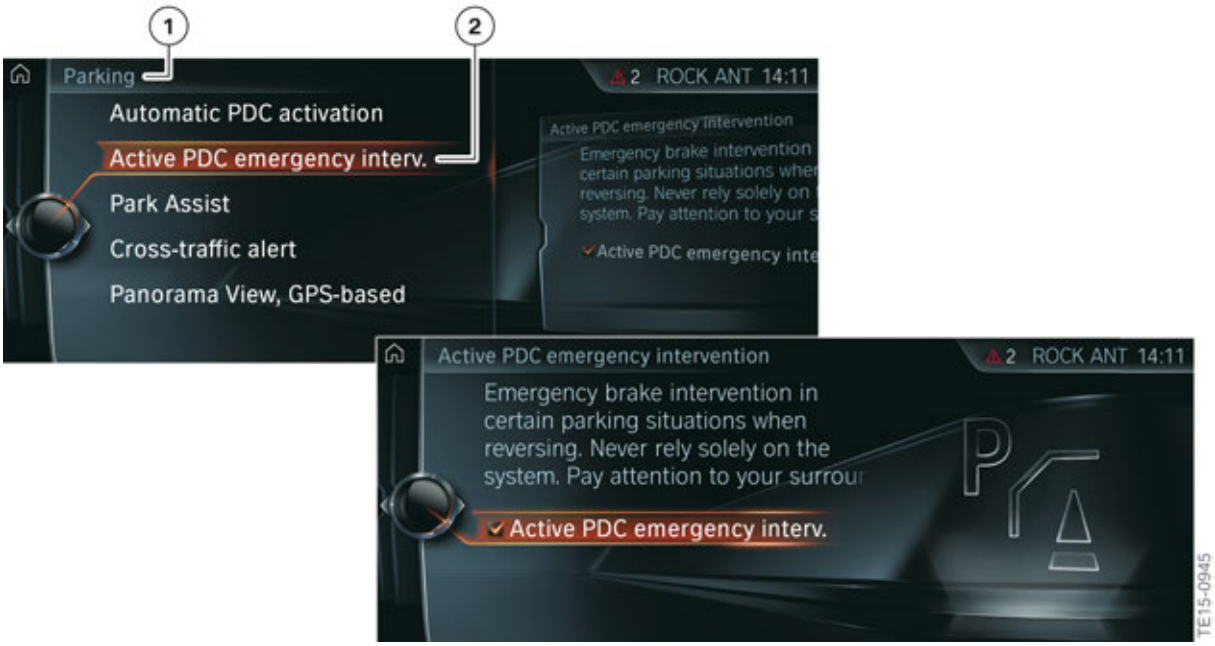

Active Park Distance Control on the CID

Index	Explanation
1	"Parking" menu
2	"Active PDC emergency interv."

16.5.3. Acoustic signal output

The driver is notified about the results of the distance measurements and the distance warnings acoustically via the audio speakers and optically via the Central Information Display (CID). As the vehicle approaches an object, the corresponding position is indicated by an intermittent tone from the audio speaker. If, for example, an object is detected behind the vehicle to the left, the rear left speaker emits an acoustic signal. A continuous alarm sounds when the object is about 25 cm or less away. The volume of the acoustic signal of the Park Distance Control system can be adjusted in relation to the audio playback of the entertainment system.

Park Distance Control volume control menu on the CID

Index	Explanation
1	"System settings"
2	"Sound"
3	"Volume settings"
4	"PDC"

16.6. Deactivation criteria

Similar to other BMW models, the deactivation is distance-/speed-based. The switch-off is effected after a journey of about 50 m or at a speed over 36 km/h.

If a fault develops, a Check Control message ("PDC has malfunctioned. Have system checked.") is displayed in the Central Information Display (CID). In addition, the detection range of the sensors is shown shaded in the Central Information Display (CID).

16.7. Limits of the system

Due to the physical limits during the ultrasonic measurement, obstructions may not be detected by the Park Distance Control system. Several examples of this are shown below:

- If the objects are thin or wedge-shaped.
- When the objects are low.
- When objects that, due to their shape, have corners and sharp edges.
- With snow.
- If the objects have a porous surface.

A warning may also be displayed although there is no obstruction in the detection range. This may be the case in the following situations:

- When it is raining heavily.
- If the sensors are heavily soiled or iced over.
- If the sensors are covered with snow.
- If the street surface is rough.
- If there are bumps, e.g. speed bumps.
- In large right-angled buildings with smooth walls, e.g. underground car parks.
- Due to heavy exhaust gas fumes.
- Due to other ultrasound sources.

To ensure the ultrasonic sensors remain fully operational, they must be kept clean and free of ice. When cleaning the sensors using a high pressure cleaner, avoid direct and sustained contact with a high-pressure water jet. Furthermore, when using high pressure cleaners, a distance of at least 30 cm from the sensors must be maintained.

⚠

The Park Distance Control cannot replace the driver's personal judgement of the traffic situation. Also check the traffic situation around the vehicle by looking around, otherwise there may be a risk of an accident as a result of road users or objects which lie outside the detection range of the Park Distance Control. Loud sound sources outside and inside the vehicle could drown out the PDC signal.

G12 Driver Assistance Systems

17. Remote Control Parking

17.1. Introduction

17.1.1. Scope of functions

Remote Control Parking is used for the first time in the BMW 7 Series. This new assistance system enables the vehicle to be maneuvered in and out of a parking space remotely using the BMW display key. The system assists the driver to park in tight parking bays or enclosed spaces (such as garages or in multi-storey car parks), where it is difficult for the driver to get in and out of the vehicle.

The advantages of this are as follows:

- Avoiding difficulties getting in and out of the vehicle.
- Avoiding scraping the doors when getting in and out of the vehicle.
- More efficient use of parking spaces.

The Remote Control Parking function takes over the following vehicle functions (taking into account the system limits):

- Longitudinal guidance (drive position change, acceleration, braking).
- Lateral guidance (minimum steering correction).
- Starting and switching off the engine.
- Assistance in monitoring the vehicle surroundings (using ultrasonic sensors and cameras, although the driver remains responsible for this).
- Switching the low-beam headlights on and off.
- Releasing and engaging the electric parking brake.

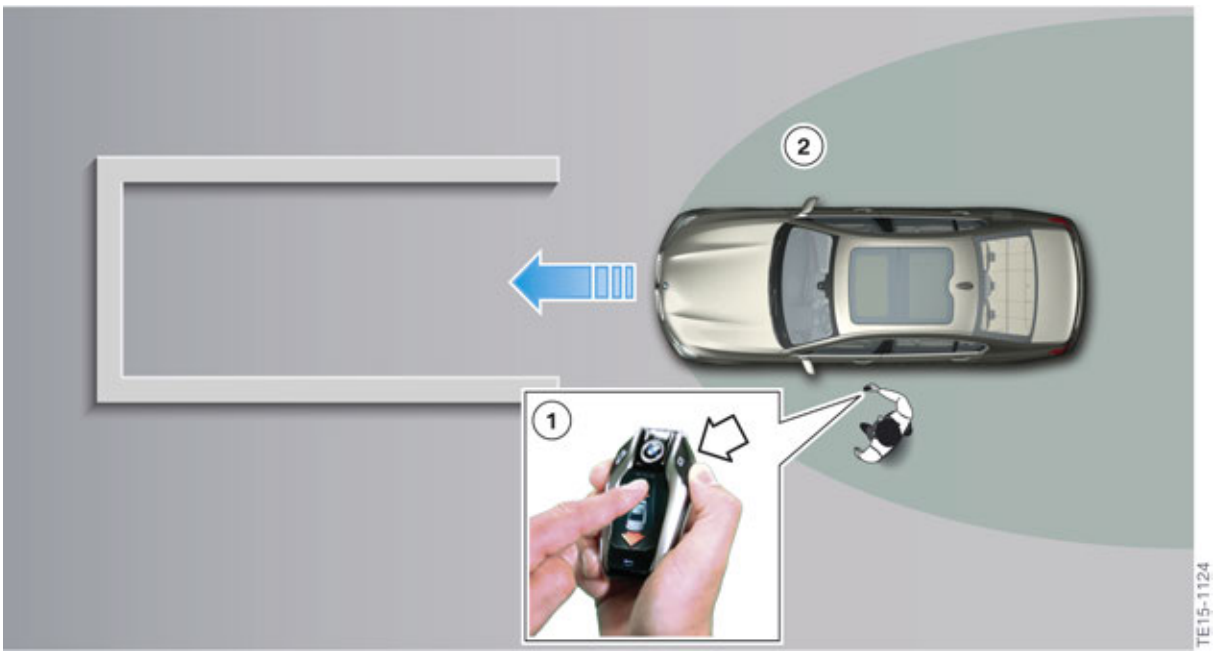

Remote Control Parking

G12 Driver Assistance Systems

17. Remote Control Parking

Index	Explanation
1	BMW display key
2	Remote Control Parking operating range

The entire parking procedure is monitored by the Park Distance Control and Parking Maneuver Assistant ultrasonic sensors and the Surround View cameras within their system limits. The driver is outside the vehicle while it is being parked. He must however check the situation around the vehicle by looking around and can cancel the parking procedure at any time using the display key. If the driver leaves the operating range, the vehicle stops automatically.

During the parking procedure the vehicle can be moved approximately 1.5 times the vehicle length using the BMW display key. The speed of the process is approximately 1.1 mph (1.8 km/h). Minimal steering corrections are only made when moving forwards into the parking space. When pulling out of a space using the Remote Control Parking function, steering interventions are not made. Thus, it is only possible to pull out of the parking space in a straight line.

The remote-controlled driving in and out of a parking space are not linked. The driver can park his vehicle himself and then maneuver out of the parking space using the display key and vice versa. However, the vehicle can only be parked in a space in a forwards direction.

The Remote Control Parking, optional equipment (OE 5DV), can only be ordered in conjunction with the following optional equipment:

- Rear view camera (OE 3AG)
- Comfort Access (OE 322)
- BMW display key (OE 3DS)
- Surround View (OE 5DL)
- Parking Maneuver Assistant (OE 5DP)

The graphic below shows an overview of the possible situations in which the remote-controlled parking function can be used.

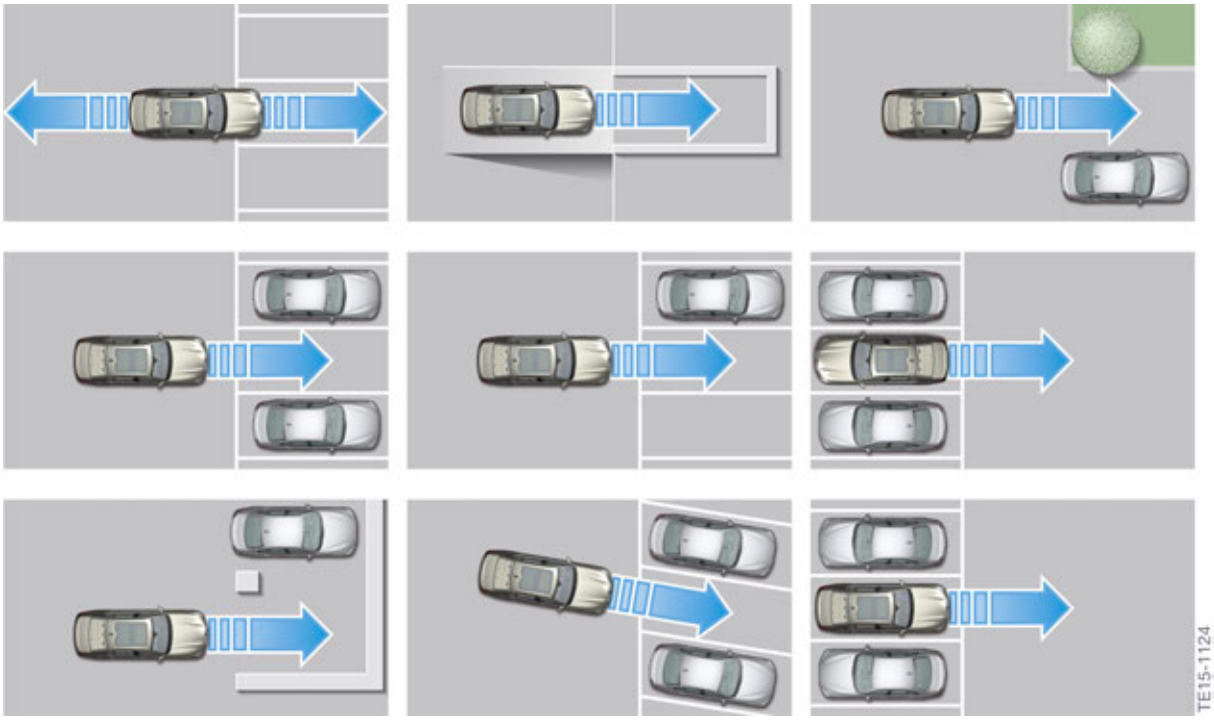

Overview of possible Remote Control Parking use cases

17.1.2. Requirements of parking spaces

To ensure the Remote Control Parking function can automatically maneuver the vehicle into a space, certain prerequisites must first be met.

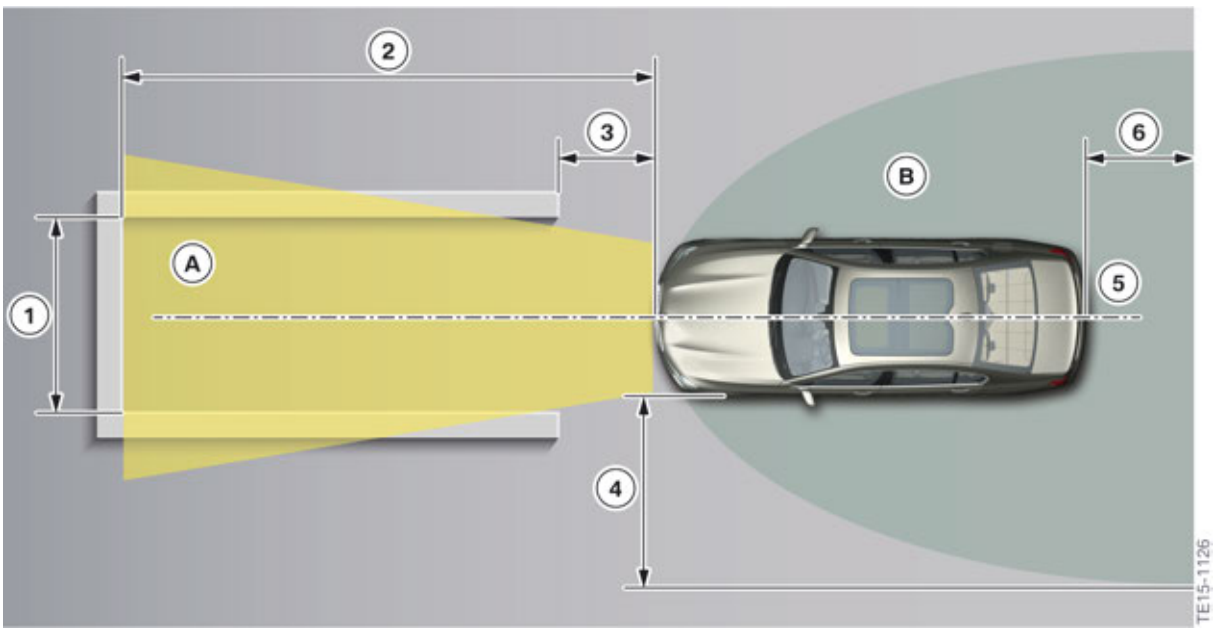

Prerequisites for Remote Control Parking

17. Remote Control Parking

Index	Explanation
A	Potential parking area
B	Operating range
1	Minimum parking space width 8.8 ft (2.7 m)
2	Maximum movement range 29.5 ft (9 m)
3	Distance to parking space, maximum 6.5 ft (2 m)
4	Maximum distance of driver from side of vehicle 5 ft (1.5 m)
5	Maximum 3° turn angle and 10 cm offset to the centre of the parking space are compensated for by small steering adjustments
6	Maximum distance of driver from rear of vehicle apprx. 10 ft (3 m)

Remote Control Parking can be used on inclines and downhill gradients of up to 5%.

The following table shows an overview of situations in which remote-controlled parking of the vehicle into a space is possible or not possible.

Parking situation	Description
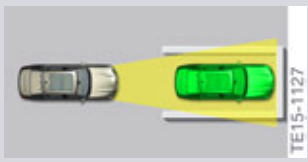	Vehicle parks forwards in a straight line.
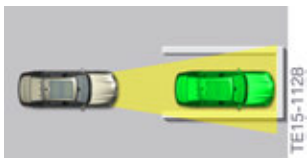	Vehicle parks forwards in a straight line despite slight offset.
	Vehicle parks forwards and minimal steering adjustments are made.
	Vehicle parks forwards and stops. Turn angle too large. Solution: stop vehicle in central position in front of parking space (multiple-move parking maneuvers possible).
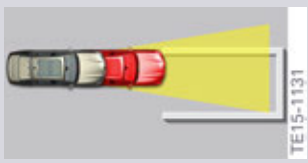	Vehicle parks forwards and stops. Offset too large. Solution: stop vehicle in central position.

17.2. Park procedure

17.2.1. BMW display key

The BMW display key contained in the Remote Control Parking optional equipment (OE 5DV) is supplied instead of a standard remote key and supports all the standard remote control functions.

The following additional functions are available:

- Calling up the status of doors and windows.
- Calling up the status of the alarm system.
- Switching the auxiliary heater on and off.
- Calling up the range.
- Calling up Service Information.
- Remote Control Parking.

The display is a 2.2” LCD touch screen display with a resolution of 320 x 240 pixels.

BMW display key

Index	Explanation
1	Opening/closing the tailgate
2	Unlocking
3	Locking
4	Programmable button
5	Touch screen display

17. Remote Control Parking

Index	Explanation
6	Remote Parking button
7	Back
8	Switching display on/off
9	Micro USB port

The touch screen display and Remote Control Parking button on the BMW display key are used to operate the Remote Control Parking function. This makes the function intuitive to use and provides the driver with messages on the action required to operate the function and system limits.

The Remote Control Parking button must be held down for the duration of the parking maneuver, otherwise parking will not start or the vehicle will initiate emergency braking if the button is released (electric parking brake subsequently engaged). If the data transfer between the vehicle and BMW display key is interrupted, the vehicle is also decelerated to a standstill, as the data can only be transmitted in the vicinity of the vehicle.

The BMW display key shows the driver a variety of targeted instructions and fault messages, giving him direct feedback and information on operating the Remote Control Parking function.

Examples of instructions/fault messages:

- Roadway unsuitable.
- Move closer to vehicle.
- Connection to vehicle faulty.
- Close hood.
- Parking space too narrow.
- Engage selector lever position P, switch off engine and get out.
- Remote Control Parking successfully completed.
- Clean viewing aperture of the cameras.
- Press parking button to continue.

17.2.2. Activation

Remote Control Parking must be activated before use. The graphic below shows an overview of activation.

The system does not relieve the driver of personal responsibility for correctly judging the traffic and parking situation. Due to the limits of the system, it cannot automatically react adequately in all situations. There is a risk of an accident. Check the traffic conditions and parking situation, and react accordingly if required.

Unauthorized persons, e.g. children, can set the vehicle in motion using the BMW display key, without anyone being in the vehicle. There is a risk of an accident. Protect the BMW display key from unauthorized use.

Remote Control Parking activation

Index	Explanation
1	Activate the display by pressing the button on the side of the key and then unlock it by swiping your finger upwards on the display.
2	Establish a connection to the vehicle. To do so, either select Remote Control Parking in the main menu and then hold down the Remote Control Parking button, or hold down the Remote Control Parking button immediately after unlocking the display.
3	Start the engine using the BMW display key.
4	Control the direction of travel of the vehicle by pressing the arrow symbols or sliding the vehicle symbol.

17.2.3. Parking

The following table outlines the remote-controlled parking procedure and the functions carried out on the vehicle in the process.

		Driver	Vehicle
1		1 Stops in front of parking bay/ enclosed space 2 Switches off engine and engages selector lever in "P" position 3 Gets out of vehicle 4 Activates Remote Control Parking using the BMW display key	
2	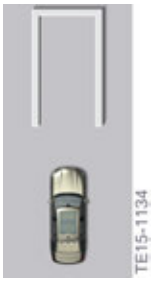	1 Positions himself in the operating range 2 Holds down the Remote Control Parking button 3 Waits until operational readiness is displayed 4 Starts the engine using the BMW display key	• Activates the electric parking brake • Starts the engine • Activates the service brake • Releases the electric parking brake
3		• Presses forwards direction arrow on BMW display key while checking the vehicle surroundings	• Drive position change from "P" to "D" • Releases service brake • Drives into parking space • Maintains set speed • Adjusts distance • Carries out steering adjustments

		Driver	Vehicle
3		• Changes of direction are possible at any time • Presses reverse direction arrow on BMW display key	• Brakes to a standstill • Drive position change from "D" to "R" • Releases service brake • Reverses • Maintains set speed • Adjusts distance
4		• To change direction again, presses forwards direction arrow on BMW display key	• Brakes to a standstill • Drive position change from "R" to "D" • Releases service brake • Drives into parking space • Maintains set speed • Adjusts distance • Carries out steering adjustments
5		1 When the parking procedure has been completed successfully, releases the Remote Control Parking button 2 Switches off the engine using the BMW display key 3 Deactivates Remote Parking using the BMW display key 4 Locks vehicle	• Brakes to a standstill • Activates the service brake • Drive position change from "D" to "P" • Engages electric parking brake • Switches off engine

The vehicle can be stopped at any time using the BMW display key:

- By releasing the direction arrow (vehicle brakes to a standstill by means of a gentle brake intervention).
- By releasing the Remote Control Parking button (vehicle carries out emergency braking and engages the electric parking brake).

17.2.4. Pulling out of a parking space

The following table outlines the remote-controlled procedure for pulling out of a space and the functions carried out on the vehicle in the process.

		Driver	Vehicle
1		1 Positions himself in the operating range 2 Activates Remote Control Parking using the BMW display key	• Engine is off • Selector lever position "P" and electric parking brake are engaged
2		1 Holds down the Remote Control Parking button 2 Waits until operational readiness is displayed 3 Starts the engine using the BMW display key	• Starts engine • Activates the service brake • Releases the electric parking brake
3		• Presses reverse direction arrow on BMW display key while checking the vehicle surroundings	• Drive position change from "P" to "R" • Releases service brake • Drives out of parking space • Maintains set speed • Adjusts distance
4	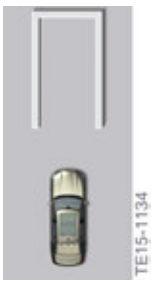	1 When the reversing procedure has been completed successfully, releases the Remote Control Parking button 2 Switches off the engine using the BMW display key 3 Deactivates Remote Control Parking using the BMW display key	• Brakes to a standstill • Activates the service brake • Drive position change from "R" to "P" • Engages electric parking brake • Switches off engine

17.2.5. Braking due to objects

If objects are detected, the Remote Control Parking function brakes the vehicle to a standstill and prevents it from rolling away (activates the service brake and engages selector position "P").

The vehicle can only be braked for objects that are continually detected by the ultrasonic sensors. Objects that are, for example, too flat or are outside the detection range of the ultrasonic sensors cannot be detected. If the driver is not paying attention, there is a risk of an accident or danger of material damage.

If the detected object has been removed, the function can continue within 30 s. If this time period expires, the Remote Control Parking switches off the engine and engages the electric parking brake.

The vehicle can be stopped at any time using the BMW display key:

- By releasing the direction arrow (vehicle brakes to a standstill by means of a gentle brake intervention)
- By releasing the Remote Control Parking button (vehicle carries out emergency braking and engages the electric parking brake).

To ensure the brake intervention feature during Remote Control Parking is working, the brake system undergoes a check during activation of Remote Control Parking. The brake pistons are activated at a defined pressure and the resulting brake pressure build-up is evaluated. If the brake pressure build-up is outside a defined range, Remote Control Parking will be deactivated.

17.2.6. Cut-off events

The Remote Control Parking function does not have any reduced functional characteristics. A fault or cut-off event either deactivates the system or causes the vehicle to be decelerated to a standstill.

Cut-off events include:

- Opening the doors, hood or trunk lid.
- Pressing the brake or accelerator pedal (carried out by a person inside the vehicle).
- Steering interventions.
- Operating the electric parking brake or gear selector switch (carried out by a person inside the vehicle).
- Exceeding the maximum movement range.
- Selecting another function using the BMW display key.
- System fault.
- Failure or contamination of the ultrasonic sensors.
- State of charge of the BMW display key battery too low (remote-controlled parking not possible below approx. 50% absolute state of charge).
- Releasing the Remote Control Parking button.
- Background noise.
- BMW display key outside the operating range.
- Maximum speed exceeded.
- Exceeding the 5% maximum incline or downhill gradient.

17.3. System overview

The top rear side view camera (TRSVC) and optional equipment system (SAS) control units are the central system components of the Remote Control Parking function. The Park Distance Control and Parking Maneuver Assistant ultrasonic sensors, and the Surround View cameras record the area around the vehicle. The Comfort Access antennas and Remote Control Parking antenna are used to detect the location of the driver and BMW display key.

The following graphic shows the components required for Remote Control Parking in addition to those that make up the Parking Maneuver Assistant function.

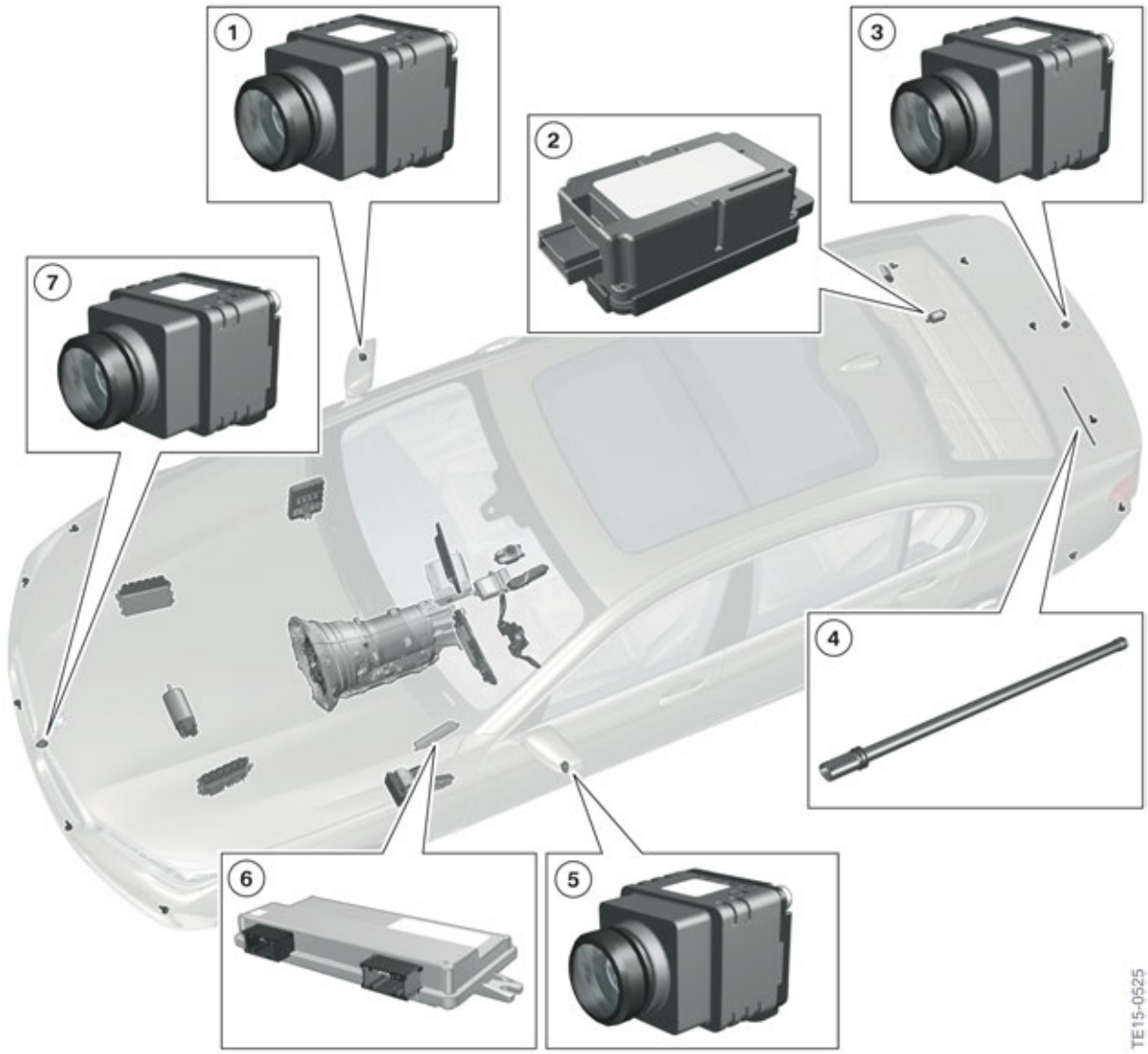

Remote Control Parking system components

G12 Driver Assistance Systems

17. Remote Control Parking

Index	Explanation
1	Right side view camera
2	Remote control receiver (FBD)
3	Rear view camera (RFK)
4	Remote Control Parking antenna
5	Left side view camera
6	Top rear side view camera (TRSVC) control unit
7	Front camera

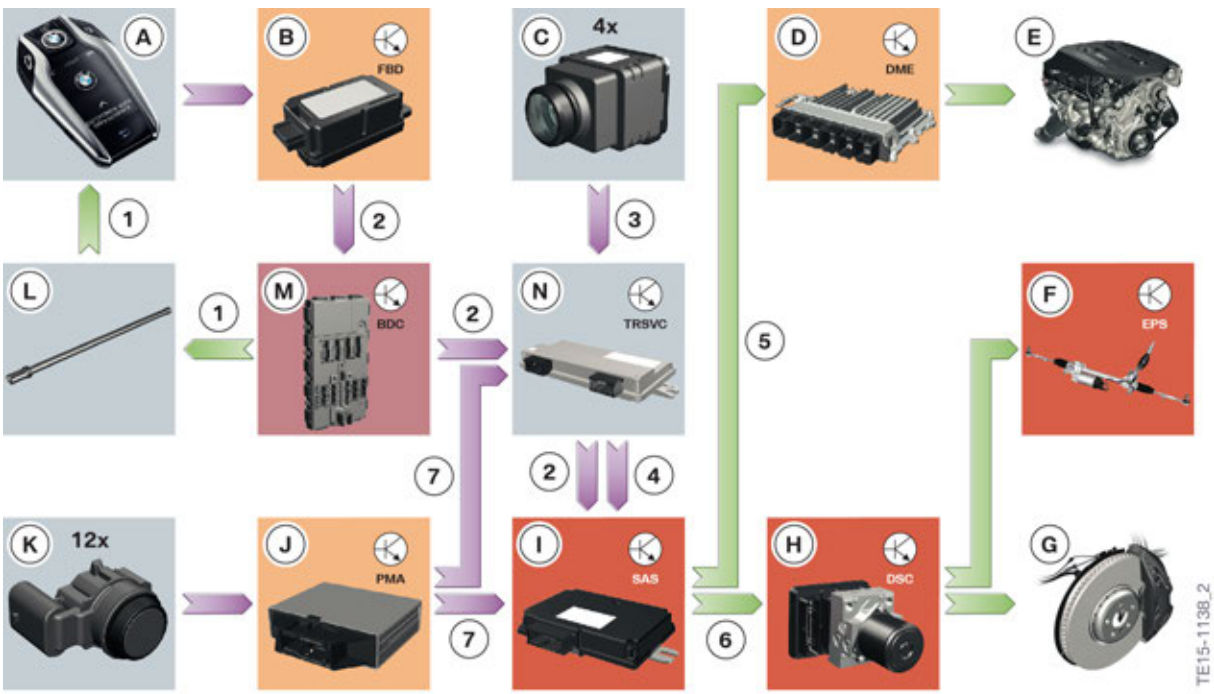

Remote Control Parking inputs/outputs

Index	Explanation
A	BMW display key
B	Remote control receiver (FBD)
C	Surround View cameras
D	Digital Motor Electronics (DME)
E	Drive
F	Electromechanical power steering (EPS)
G	Brake system
H	Dynamic Stability Control (DSC)
I	Control unit for optional equipment system (SAS)

Index	Explanation
J	Control unit for Parking Maneuver Assistant (PMA)
K	Ultrasonic sensors
L	Remote Control Parking antenna
M	Body Domain Controller (BDC)
N	Top rear side view camera (TRSVC) control unit
1	Location detection of the driver and BMW display key
2	Requested direction of travel
3	Camera data from Surround View
4	Curve nominal value
5	Drive torque nominal value
6	Steering and braking torque nominal value
7	Information about potential objects and their positions

Longitudinal guidance

After successfully activating the Remote Control Parking function and pressing the dedicated button, the driver indicates the desired direction of travel by pressing the corresponding arrow symbol. The requested direction of travel (2) is sent to the remote control receiver (B) and then on to the SAS control unit (I) via the Body Domain Controller (M) and TRSVC control unit (N). During the parking procedure, the Body Domain Controller checks whether the driver is within the operating range (1) with the help of the Remote Control Parking antenna (L) and the Comfort Access antennas. Installing the Remote Control Parking antenna increases the operating range behind the vehicle, compared to the area that would be covered by the Comfort Access antennas alone.

The SAS control unit, which is responsible for the longitudinal guidance, determines the relevant nominal values (5 and 6) from this and sends them to the DSC control unit (H) and the Digital Motor Electronics (DME) (D).

The system brakes and accelerates automatically according to the distance information from the Parking Maneuver Assistant function (PMA) (7 and J).

Lateral guidance

While Remote Control Parking is being activated, the TRSVC control unit (N) measures the parking space with the help of the ultrasonic sensors (K) and the Surround View cameras (C). The parking end straight line and maximum permitted curve are calculated using this as a basis and sent to the SAS control unit (I). The SAS control unit then uses this data to calculate the “curve nominal value” (4). The curve nominal value is the curve of the path that the vehicle is to follow.

The SAS control unit sends the calculated curve nominal value to the DSC control unit (H), where it is converted to a steering torque that is then implemented by the EPS. The driving speed is also calculated in the DSC control unit.

17.3.1. Limits of the system

The system does not relieve the driver of personal responsibility for correctly judging the traffic and parking situation. Due to the limits of the system, it cannot automatically react adequately in all situations. There is a risk of an accident or danger of material damage. The driver should check the traffic conditions and parking situation, and react accordingly if required.

Remote Control Parking cannot be used when trailer towing.

The function may be restricted in the following situations:

- On uneven surfaces, e.g. gravel roads.
- On slippery surfaces.
- On steep inclines or downhill gradients.
- If leaves have gathered or snow has piled up in the parking space.
- If an emergency spare wheel is fitted.
- If a parking space that has already been measured changes.
- If there are ditches or chasms.

Due to the technical system limits of the ultrasonic measurement, the system may react incorrectly or not at all.

Limits of the ultrasonic measurement:

- If there are small children or animals.
- If the sensors are dirty, iced up, damaged or incorrectly adjusted.
- If trailer towbars and couplings are connected to other vehicles.
- If there are objects projecting above the vehicle, e.g. wall projections or shelves.

Further information can be found in the Owner's Handbook for the vehicle.

G12 Driver Assistance Systems

18. Cross Traffic Alert

The Cross Traffic Alert is used for the first time in the G12. This warning assists the driver when maneuvering out of a parking space and in other everyday situations where it is difficult to see the traffic, such as at blind entrances and exits.

Depending on the vehicle equipment, the Cross Traffic Alert is available for the front and rear.

The system can detect objects that are approaching the vehicle from the side, either from the front or rear (depending on the vehicle equipment). The driver is made aware or, if necessary, warned of cross traffic by the Cross Traffic Alert when maneuvering out of a parking space or entering the cross traffic.

18.1. Functional principle

If a moving object is detected, which based on the current speed would be in the area in front of or behind the vehicle in approximately the next three seconds, a visual and acoustic warning is issued.

When a Cross Traffic Alert Rear is issued, the LED in the mirror glass is also switched on. The Blind Spot Detection signal unit is used as an indicator. The indicator is switched on in either the left or right mirror depending on the direction from which the object is approaching the vehicle.

The Cross Traffic Alert works up to a speed of approximately 7 km/h. Another prerequisite of the function is that the side radar sensors are able to detect the road or approaching object. The radar sensors can detect objects up to approximately 30 to 40 m away from the vehicle.

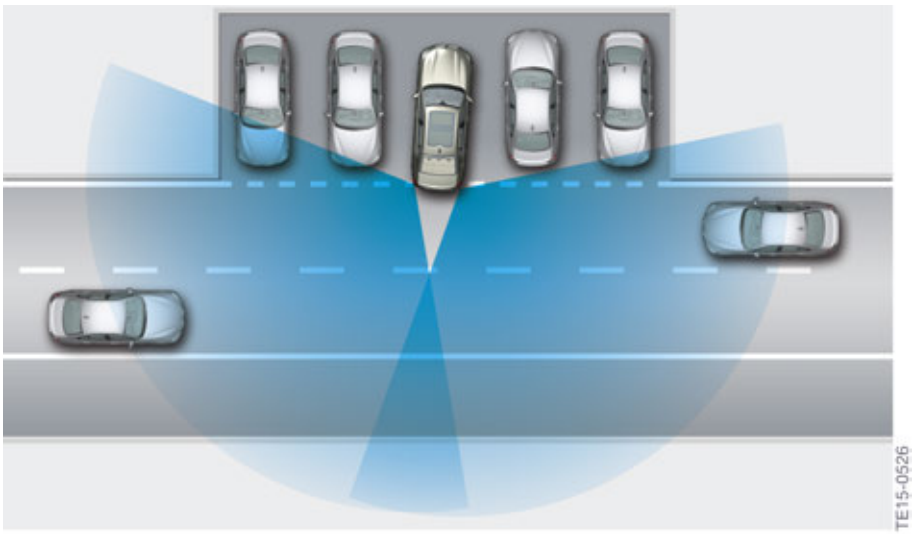

G12 Cross Traffic Alert Rear example: maneuvering out of a parking space

Depending on the vehicle equipment, different versions of the Cross Traffic Alert and displays on the Central Information Display are available.

18. Cross Traffic Alert

18.2. Cross Traffic Alert Rear

The Cross Traffic Alert Rear assists the driver when reversing out of a parking space and warns of potential collisions with cross traffic in traffic situations where it is difficult to see obstructions.

The Cross Traffic Alert Rear function is included in the Active Driving Assistant (OE 5AS) optional equipment.

The warning is displayed in the Park Distance Control image on the Central Information Display.

In conjunction with the rear view camera optional equipment (OE 3AG), the Cross Traffic Alert Rear will be extended to include an additional display on the Central Information Display in a later version. The warning will be shown in the form of a red bar in the camera's video screen.

The Cross Traffic Alert Rear is enabled if the driver engages the "R" drive position or the Park Distance Control is active.

In vehicles with the Surround View optional equipment (OE 5DL), the Cross Traffic Alert Rear is also enabled if Panorama View has been activated.

The Cross Traffic Alert Rear is available at speeds from 0 to approximately 7 km/h.

18.3. Cross Traffic Alert Front

The Cross Traffic Alert Front assists the driver when entering the cross traffic from exits and blind intersections.

The Cross Traffic Alert Front is included in the Active Driving Assistant Plus (OE 5AT) optional equipment. If the Cross Traffic Alert Front is installed, the Rear version is activated automatically.

The warning is displayed in the Park Distance Control image on the Central Information Display.

The Cross Traffic Alert Front is enabled if the Park Distance Control is active and the speed of the vehicle does not exceed approximately 7 km/h.

In vehicles with the Surround View optional equipment (OE 5DL), the Cross Traffic Alert Front is also enabled if Panorama View has been activated.

Like the Cross Traffic Alert Rear, the Cross Traffic Alert Front function is available at speeds from 0 to approximately 7 km/h.

G12 Driver Assistance Systems

18. Cross Traffic Alert

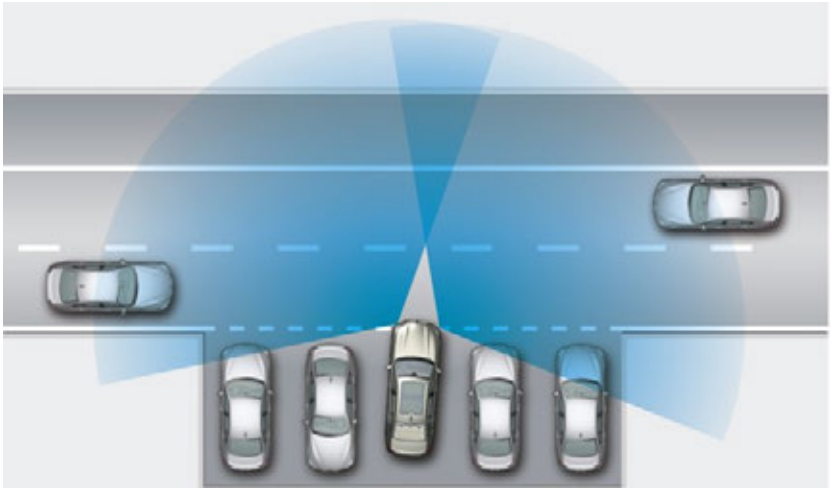

G12 Cross Traffic Alert Front example: maneuvering out of a parking space

18.4. Displays

The respective peripheral region in the PDC view flashes red if vehicles are detected by the sensors.

G12 Cross Traffic Alert in the PDC view

In vehicles with the Surround View optional equipment (OE 5DL), the warning is shown on the Central Information Display in the PDC view image and in the front camera and rear view camera video images in the form of a red bar.

If Panorama View is activated, the Cross Traffic Alert is shown in the form of a red bar on the Central Information Display.

G12 Driver Assistance Systems

18. Cross Traffic Alert

G12 Panorama View (Cross Traffic Alert Front)

The Cross Traffic Alert is available to the driver for both the front and rear views.

G12 Panorama View (Cross Traffic Alert Rear)

18.5. Operation

The Cross Traffic Alert can be switched on and off in the iDrive menu by making the following selection via the controller:

- "My Vehicle"
- "Vehicle settings"
- "Parking"
- "Cross Traffic Alert"

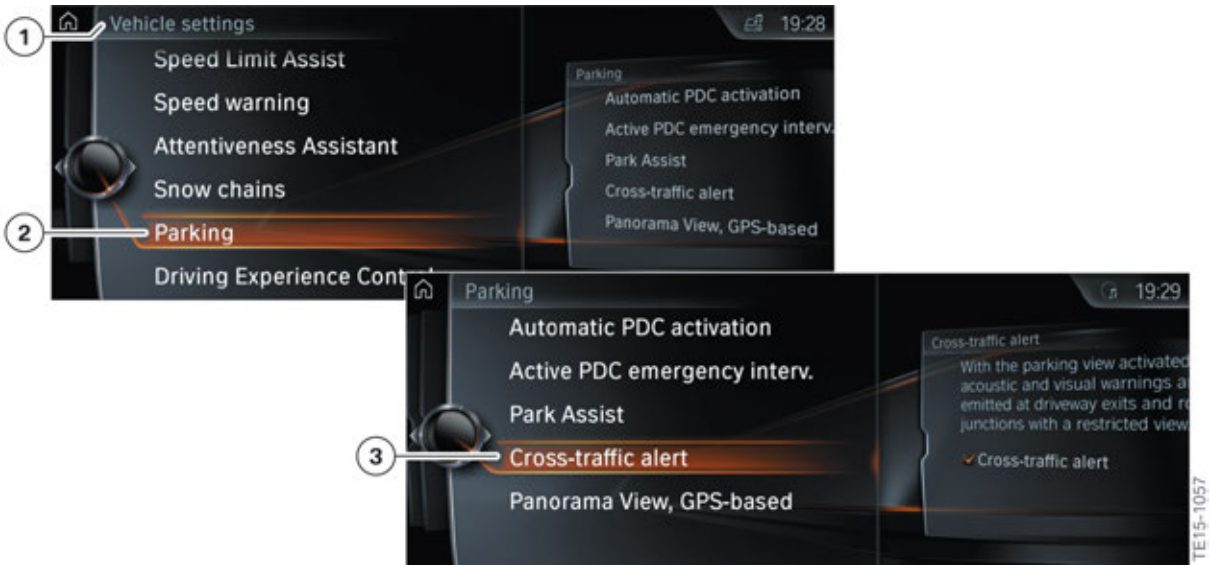

G12 Cross Traffic Alert activation on the CID

Index	Explanation
1	"Vehicle settings"
2	"Parking"
3	"Cross Traffic Alert" (switching the Cross Traffic Alert on and off)

If the Cross Traffic Alert has been activated in the iDrive menu, the function is switched on automatically as soon as the Park Distance Control or Panorama View is active.

The Cross Traffic Alert is deactivated automatically in the following situations:

- If the driver's vehicle is travelling at a speed higher than walking speed (threshold value approximately 7 km/h).
- If the Active Lane Keeping Assistant and Traffic Jam Assistant is active.
- If the driver is currently parking using the Parking Maneuver Assistant.

18.6. Limits of the system

The function may be restricted in the following situations:

- If there are other objects in the field of view of the sensors that are concealing the cross traffic.
- In heavy fog, rain or snow.
- If the bumper is dirty or iced up.
- If stickers have been attached near the radar sensors on the bumper.
- If the speed of the approaching vehicle is very high.
- If crossing objects are moving very slowly.
- On sharp bends.

If a trailer socket is being used, for example to operate a trailer or bicycle carrier, the Cross Traffic Alert is not available for the area behind the vehicle.

G12 Driver Assistance Systems

19. Parking Maneuver Assistant

The Parking Maneuver Assistant (PMA) supports the driver in many ways. The assistant measures the size of a gap between cars and decides based on the result whether the gap is large enough on the one hand and relieves the driver of the task of maneuvering into the space on the other. The Parking Maneuver Assistant (OE 5DP) is optional equipment in the G12 and is offered as part of the Driver Assistance Plus (ZDB) package.

19.1. System components

Below is an overview of important sensors and operating elements:

- The parking assistance button is the central control panel for the Parking Maneuver Assistant function (position 8).
- Two additional ultrasonic sensors in the front bumper measure parking spaces while driving (position 1).
- The distance from an obstruction is measured by four ultrasonic sensors in the rear bumper panel and four additional ultrasonic sensors in the front bumper panel (positions 11 and 19).
- Two additional ultrasonic sensors are installed in the rear bumper to precisely detect the size of a transverse parking space during the parking maneuver. The additional ultrasonic sensors measure the distance to detected objects.

G12 Driver Assistance Systems

19. Parking Maneuver Assistant

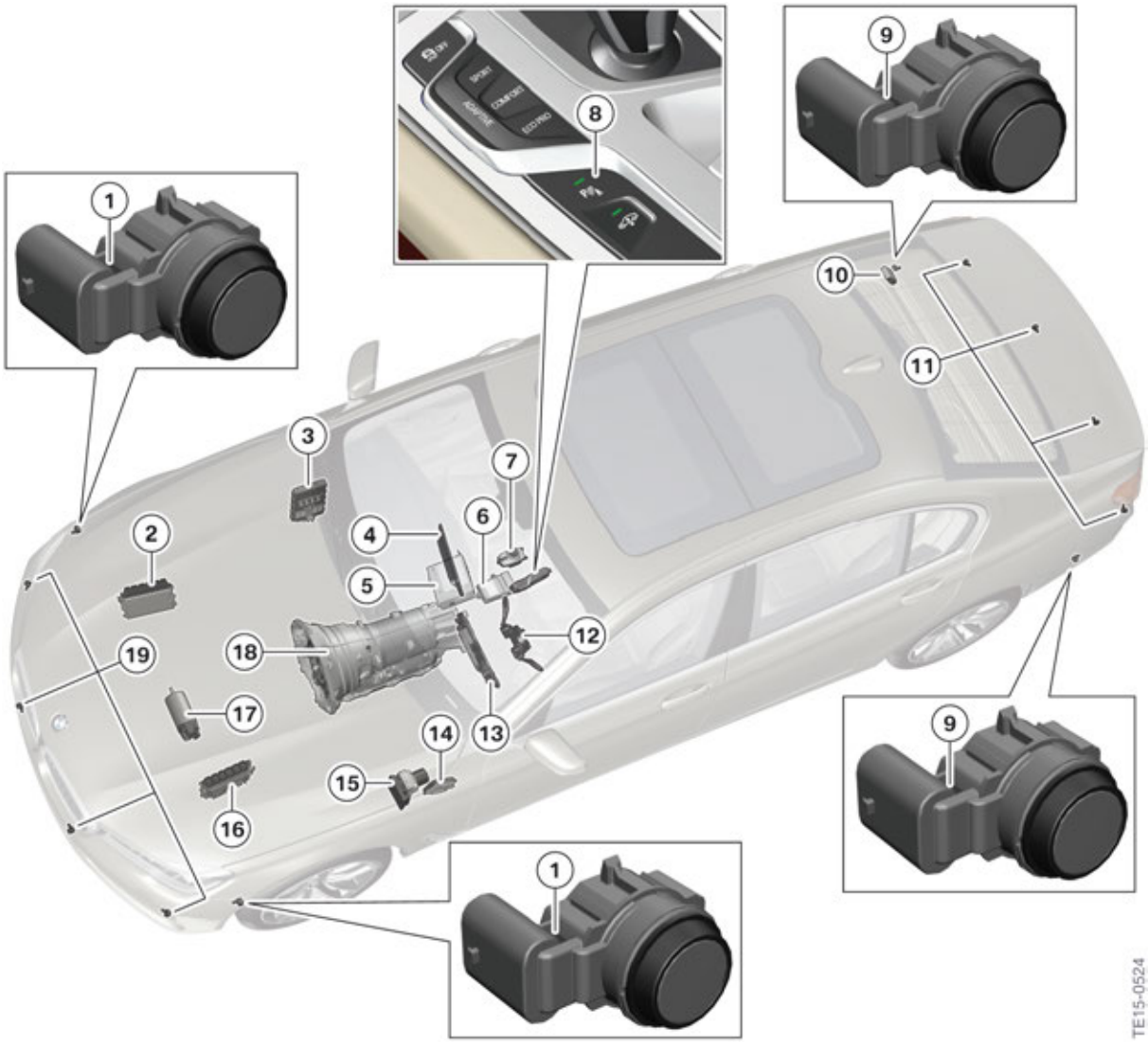

G12 Parking Maneuver Assistant system components

Index	Explanation
1	Ultrasonic sensors of Parking Maneuver Assistant
2	Digital Motor Electronics (DME)
3	Body Domain Controller (BDC)
4	Central Information Display (CID)
5	Head Unit High 2 (HU-H2)
6	Advanced Crash Safety Module (ACSM)
7	Controller (CON)
8	Parking assistance button
9	Ultrasonic sensors, Park Distance Control, rear side
10	Control unit for Parking Maneuver Assistant (PMA)

Index	Explanation
11	Ultrasonic sensors, Park Distance Control, rear
12	Steering column switch cluster (SZL)
13	Instrument panel (KOMBI)
14	Control unit for optional equipment system (SAS)
15	Dynamic Stability Control (DSC)
16	Digital Engine Electronics 2 (DME2)
17	Electronic Power Steering (EPS)
18	Electronic transmission control (EGS)
19	Ultrasonic sensors for Park Distance Control, front

19.2. System wiring diagram

The system wiring diagram on the next page shows an overview of the system components used when parking and maneuvering the vehicle. Depending on the vehicle equipment, partial scopes of supply may also be installed.

G12 Driver Assistance Systems

19. Parking Maneuver Assistant

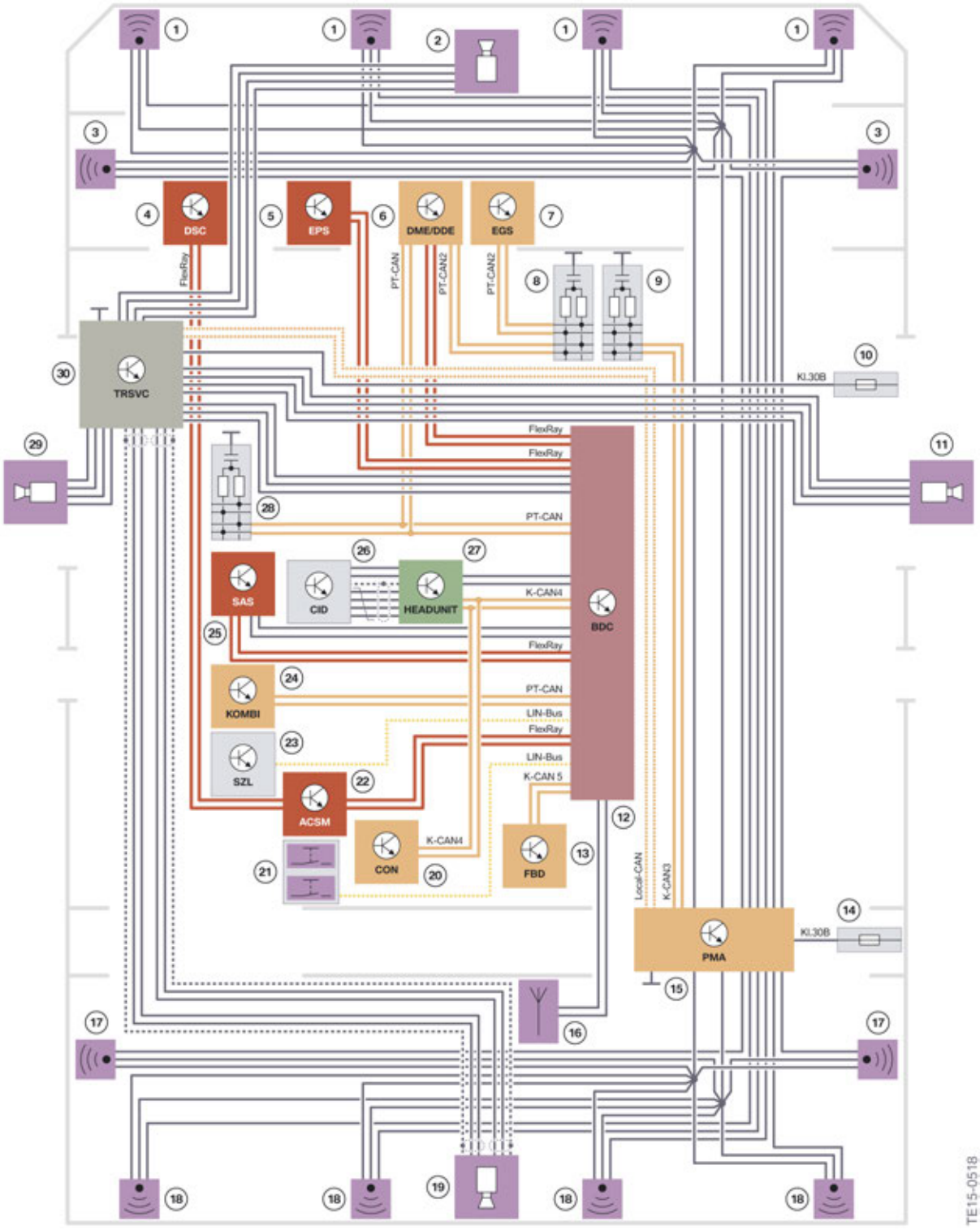

G12 Parking and maneuvering system wiring diagram

G12 Driver Assistance Systems

19. Parking Maneuver Assistant

Index	Explanation
1	Ultrasonic sensors for Park Distance Control, front
2	Front camera
3	Ultrasonic sensors for Parking Maneuver Assistant
4	Dynamic Stability Control (DSC)
5	Electronic Power Steering EPS
6	Digital Motor Electronics (DME)/
7	Electronic transmission control (EGS)
8	CAN terminator
9	CAN terminator
10	Fuse for front right power distribution box
11	Right side view camera
12	Body Domain Controller (BDC)
13	Remote control receiver (FBD)
14	Fuse for rear right power distribution box
15	Control unit for Parking Maneuver Assistant (PMA)
16	Remote Control Parking antenna
17	Ultrasonic sensors, Park Distance Control, rear side
18	Ultrasonic sensors, Park Distance Control, rear
19	Rear view camera (RFK)
20	Controller (CON)
21	Parking assistance button and button for camera activation
22	Advanced Crash Safety Module (ACSM)
23	Steering column switch cluster (SZL)
24	Instrument panel (KOMBI)
25	Control unit for optional equipment system (SAS)
26	Central Information Display (CID)
27	Head Unit High 2 (HU-H2)
28	CAN terminator
29	Left side view camera
30	Top rear side view camera (TRSVC) control unit

19.3. Control unit

In vehicles with the Parking Maneuver Assistant optional equipment (OE 5DP), the Park Distance Control and Parking Maneuver Assistant functions are provided by the PMA control unit.

G12 Control unit for Parking Maneuver Assistant (PMA)

19.4. Functional principle

The Parking Maneuver Assistant function facilitates maneuvering into parking spaces that are parallel (parallel parking) and perpendicular (bay parking) to the roadway. The system measures potential parking spaces when driving past at a speed below approximately 35 km/h without the system having been activated.

The parking spaces are measured by two additional ultrasonic sensors, which are integrated into the front wheel arch. These two sensors are connected to the Parking Maneuver Assistant (PMA) control unit, which also incorporates the Park Distance Control function. The function of the two ultrasonic sensors is similar to that of the Park Distance Control (PDC). Ultrasonic pulses are sent and echo impulses are received.

Two additional ultrasonic sensors are installed in the rear bumper of the G12 to precisely detect the size of a transverse parking space during the parking maneuver. The additional ultrasonic sensors measure the distance to detected objects.

If a parking space of a sufficient length and width is found and the system is activated, the driver is shown the space on the Central Information Display.

The Parking Maneuver Assistant function then takes over the vehicle handling entirely, including steering, braking and gear selection.

Spaces that do not have a vehicle at either side are also recognized as suitable parking spaces. This makes it possible to park behind only one object.

The driver is still responsible for monitoring the vehicle environment and can intervene in the automatic parking maneuver at any time if required due to the vehicle environment. When searching for a parking space and when parking, all relevant information is presented to the driver in an integrated display; from the parking space itself to the status of the parking assistant and corresponding handling instructions through to distances from other objects.

Personal responsibility:

- Directly monitor gaps and the parking procedure and intervene if necessary, as otherwise there is a risk of accidents.
- If a parking space that has already been measured changes, the system does not take this into account.
- The system does not take loads that project above the vehicle into account during parking.
- The Parking Maneuver Assistant (PMA) may steer the vehicle over or up onto curbs. You should therefore use the facility for active intervention at any time with caution as you may otherwise damage wheels and tires or the vehicle itself.

The Parking Maneuver Assistant (PMA) does not relieve the driver of personal responsibility during parking. Therefore, be attentive in order to be able to actively intervene at any time. Otherwise, there is a risk of an accident.

19.5. Functional prerequisites

To use the Parking Maneuver Assistant function, the following basic prerequisites must be met:

- The doors must be closed
- The tailgate must be closed
- The driver's seat belt must be fastened
- The parking brake must be released

19.5.1. Measuring parking spaces

Parking spaces are measured while driving. The following parameters apply:

- Driving forwards straight-ahead up to about 35 km/h
- Maximum distance to the row of parked vehicles: 1.5 m

Detecting the curb

If a curb is detected within the range of the ultrasonic sensor while the system is searching for a parking space, the parking space is for the most part a space that is parallel to the road.

In the case of parking spaces that are perpendicular to the roadway, the curb is usually outside the detection range of the ultrasonic sensors (range about 4.2 m).

G12 Driver Assistance Systems

19. Parking Maneuver Assistant

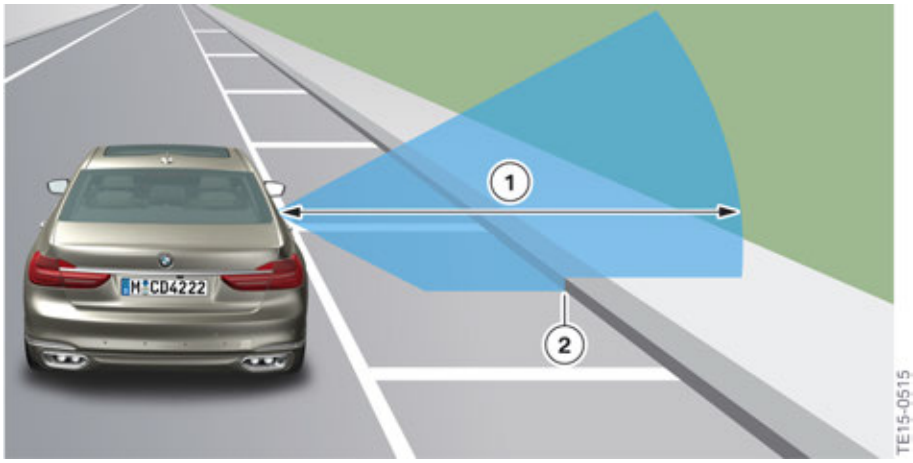

G12 Curb detection via the ultrasonic sensors

Index	Explanation
1	Range about 4.2 m; opening angle of ultrasonic sensors vertical ± 30°
2	Kerb detection

19.5.2. Suitable parking spaces parallel to the roadway (parallel parking)

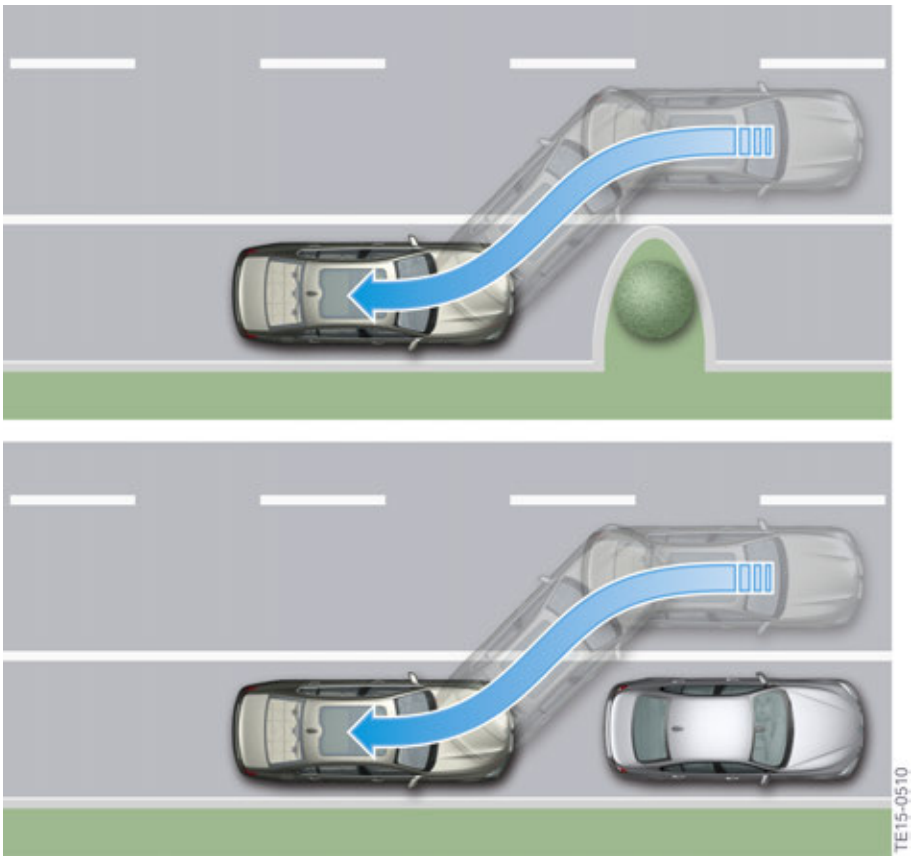

G12 Principle of parallel parking

Size of parking space	vehicle length plus about 0,8 m
Length of objects	at least 0.5 m
Minimum number of detected objects	1
Minimum depth of parking space	about 1.5 m

The minimum length of an object detected by the vehicle must be approximately 0.5 m. With an object length of 0.5 m, a curb must still be detected by the PMA sensors for the purpose of parking in a parallel (curbside) parking space so as to ensure that the parking space is a parallel one.

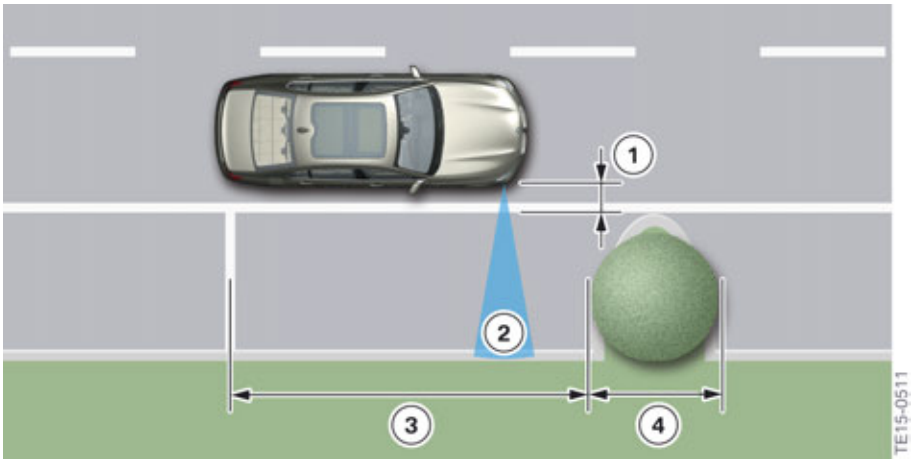

G12 Requirements of parallel parking spaces

Index	Explanation
1	Maximum distance to the row of parked vehicles or objects: 1.5 m
2	Opening angle of the ultrasonic sensor horizontal: ± 40°, range about 4.2 m
3	Length of the parking space: vehicle length plus about 0.8 m
4	Object or vehicle length at least 0.5 m

19.5.3. Suitable parking spaces perpendicular to the roadway (bay parking)

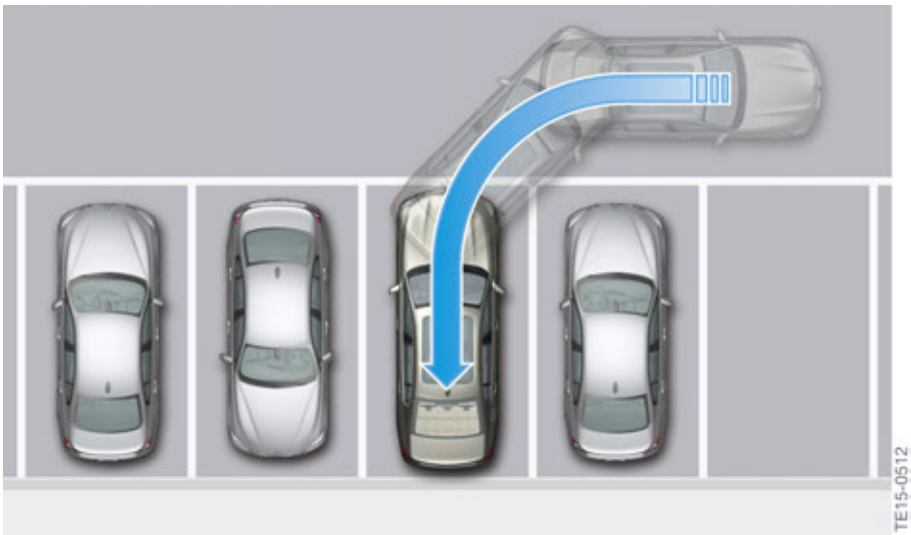

G12 Principle of bay parking

G12 Driver Assistance Systems

19. Parking Maneuver Assistant

The depth of perpendicular (cross) parking spaces must be gauged by the driver himself. Due to technical limits the system can only approximately determine the depth of perpendicular (cross) parking spaces.

G12 Requirements of bay parking spaces

Index	Explanation
1	Maximum distance to the row of parked vehicles: 1.5 m
2	Opening angle of the ultrasonic sensor horizontal: ± 40°, range about 4.2 m
3	Minimum depth of the parking space: own vehicle length
4	Vehicle or object width at least 0.5 m
5	Width of the parking space: vehicle width plus about 0.7 m up to max. 5 m

Different bay parking spaces

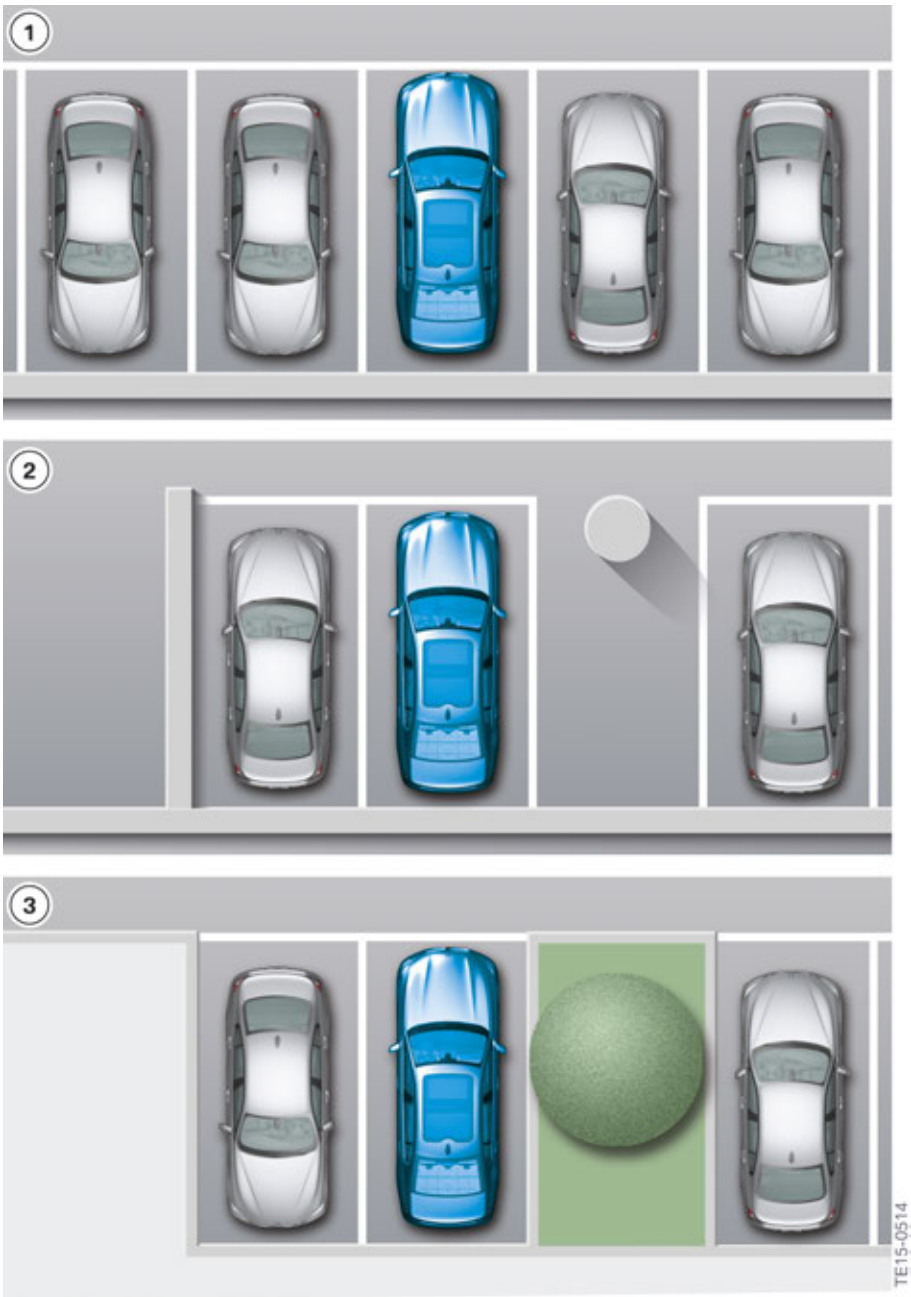

G12 bay parking spaces

Index	Explanation
1	Standard parking space between two passenger cars
2	Parking space with post (underground car park)
3	Parking space with obstacles (public car park)

19.5.4. Detection of a universal parking space

Due to the technical system limits, the vehicle does not always detect the correct parking space. Situations may occur where parking spaces are wrongly detected, or parking spaces that are unsuitable or not actually classed as parking spaces are detected.

The below graphic shows a situation where this may be the case.

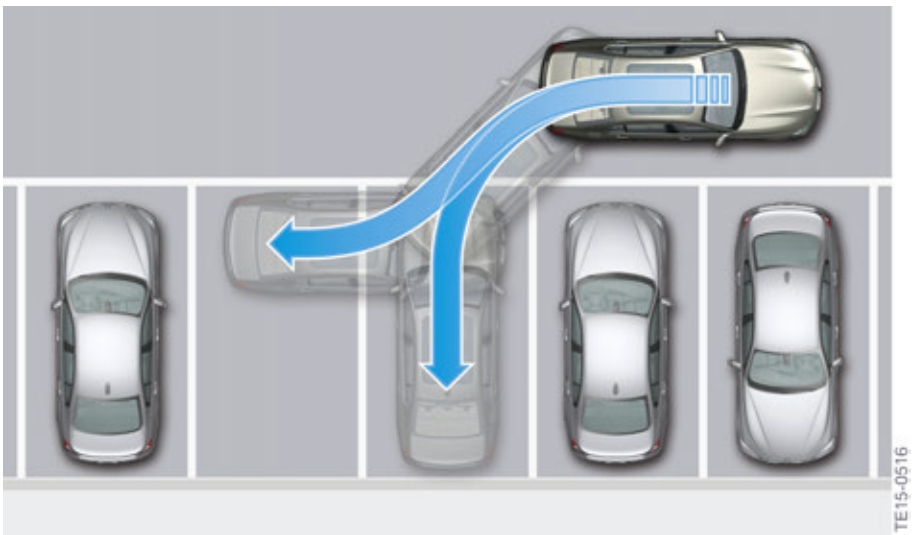

G12 Detection of a universal parking space

The detected parking space is big enough to park the vehicle in both perpendicularly and parallel to the roadway. Because of the **absence** of a curb, the vehicle cannot correctly determine the parking space. The vehicle proposes a universal parking space. In this case, the driver must decide how he wants to maneuver into the parking space.

The following display appears on the Central Information Display when the vehicle has detected a universal parking space.

G12 Universal parking space display on the CID

19.6. Side protection

The side protection warns against obstacles at the side of the vehicle and thus supports the driver when parking and maneuvering.

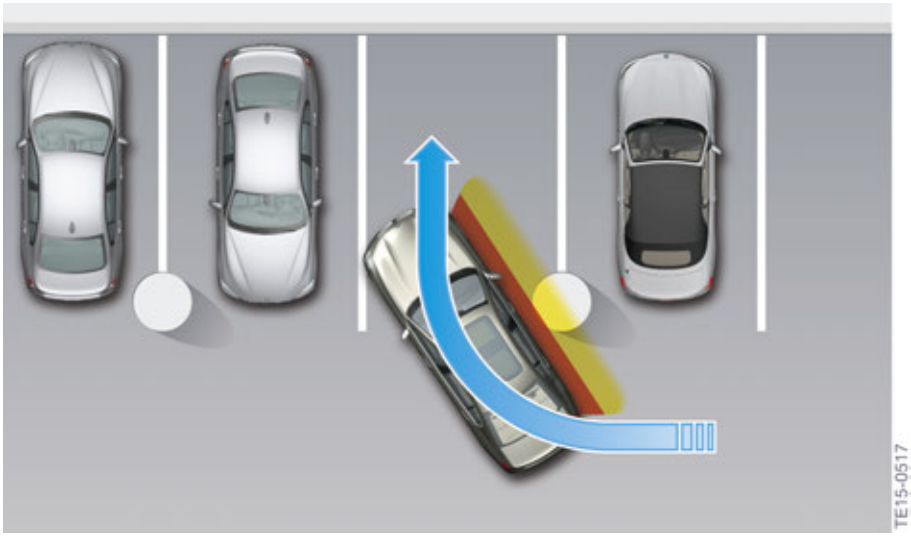

G12 Side protection

Four side ultrasonic sensors, two integrated in the front bumper and two integrated in the rear bumper, measure the distance to an obstruction. Obstructions detected by the sensors are tracked along the side of the vehicle as it moves. They are shown on the Central Information Display and, in situations where a collision is imminent, an acoustic warning also sounds.

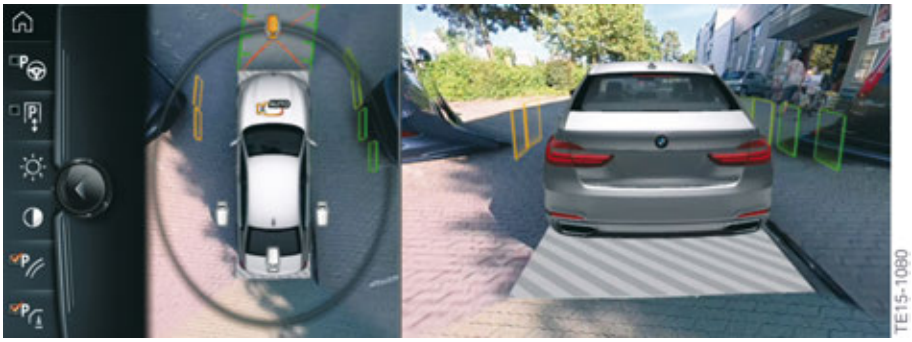

G12 Side protection view on the CID

Obstructions approaching the stationary vehicle are not taken into account, as in this case the system cannot evaluate the situation properly. The prerequisite for identifying obstructions is that the (driver's) vehicle is moving.

The distance markings shown on the CID are displayed for approximately 13 seconds once the vehicle has stopped. The markings are only shown again once the vehicle starts moving.

19.7. Operation

There are two ways to activate the Parking Maneuver Assistant function:

- Activation via parking assistance button.
- Activation by "Engaging reverse gear" followed by "iDrive controller operation".

Activation via parking assistance button

When the PMA is activated via the parking assistance button in the center console the parking assistance menu in the Central Information Display (CID) is displayed. As soon as a parking space is found, the driver receives handling instructions that guide him through the parking procedure with the support of the system. When parking automatically, the driver must hold down the parking assistance button until the parking procedure is complete.

G12 Switch block with parking assistance button

Index	Explanation
1	Parking assistance button

Activation by "Engaging reverse gear" followed by "iDrive controller operation"

When reverse gear is engaged, the Parking Maneuver Assistant menu is displayed on the Central Information Display accompanied by the status of the parking space search. The Parking Maneuver Assistant (PMA) is however not yet activated. This is indicated to the driver by the Parking Maneuver Assistant symbol in the toolbar of the CID. In order to park supported by the system, the parking operation must be activated via the controller by selecting the corresponding symbol in the symbol bar at the Central Information Display (CID). When parking automatically, the driver must hold down the parking assistance button until the parking procedure is complete.

19.7.1. Parking procedure (parallel parking)

A check mark then appears on the right below the Parking Maneuver Assistant symbol on the Central Information Display to tell the driver that Parking Maneuver Assistant is active.

If the Parking Maneuver Assistant function is activated during the journey using the parking assistance button, the driver is informed about the parking space search on the CID. When a parking space is found, it appears on the corresponding page on the CID. The driver is also instructed to stop the vehicle at the same time.

G12 Parking procedure using PMA (parallel parking)

The driver is instructed to confirm the parking space by using the turn indicator corresponding to the parking direction.

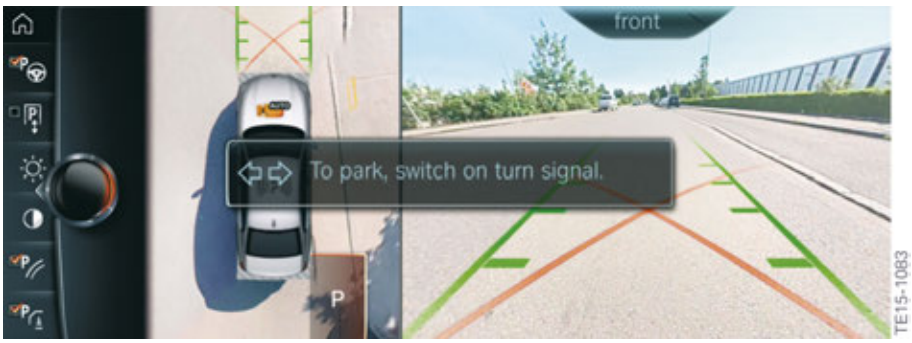

G12 Parking procedure using PMA (parallel parking)

The parking procedure can now be started by pressing the parking assistance button. The parking assistance button must be held down. Then the driver must release the brake.

G12 Parking procedure using PMA (parallel parking)

The button must be held down continuously until the parking procedure is complete.

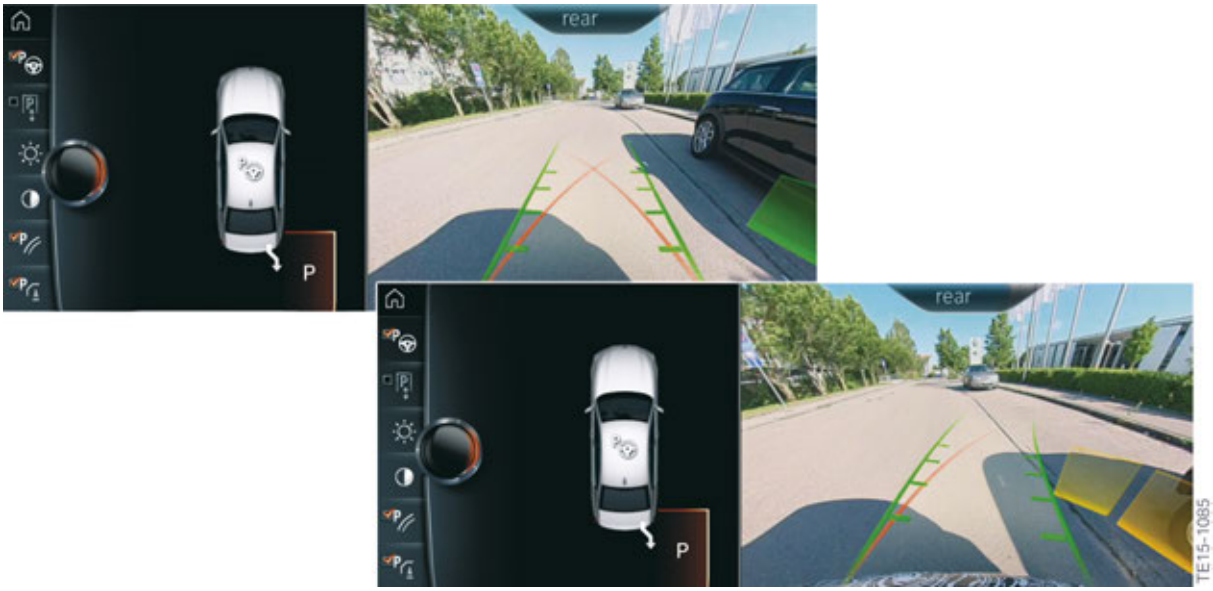

G12 Parking procedure using PMA (parallel parking)

Upon completion, an acoustic signal sounds and a confirmation message appears to tell the driver that the parking procedure is complete. The Parking Maneuver Assistant engages "P" thus preventing the vehicle from rolling away.

G12 Parking procedure using PMA (parallel parking)

19.7.2. Parking procedure (bay parking)

The graphics on the next page show the bay parking process.

G12 Driver Assistance Systems

19. Parking Maneuver Assistant

G12 Parking procedure using PMA (bay parking)

19.7.3. Deactivation criteria

Manual deactivation criteria

The Parking Maneuver Assistant (PMA) can be deactivated at any time if necessary by the driver via the controller by selecting the corresponding symbol in the symbol bar on the Central Information Display (CID). Another way to deactivate the Parking Maneuver Assistant (PMA) is to release the parking assistance button in the switch block next to the iDrive controller.

If a fault develops, a Check Control message ("The PDC has malfunctioned. Have system checked.") is displayed in the Central Information Display (CID).

Automatic deactivation criteria

The Parking Maneuver Assistant (PMA) is switched off automatically when the following events occur:

- The parking assistance button is released.
- The driver holds on to the steering wheel or steers himself.
- A gear is selected that does not correspond to the instruction on the control display.
- When accelerating.
- The parking brake is secured.
- The turn indicator opposite the required parking side is switched on.
- At speeds above about 10 km/h.
- Possibly if the roadway is covered with snow or is slippery.
- The tailgate is open.
- Possibly if the objects are difficult to overcome, e.g. curbs.
- If obstructions suddenly appear.
- A maximum number of parking maneuvers or the parking duration has been exceeded.

19.8. Limits of the system

The detection of objects can test the ultrasonic measurement system to its limits. Several examples of this are shown below:

- With trailer tow bars and couplings.
- If the objects are thin or wedge-shaped.
- If the objects are projecting and elevated, e.g. wall projections or loads.
- If the objects have corners and sharp edges.
- If the objects have fine surfaces or structures, e.g. fences.

Low objects that are already displayed, e.g. curbs, may fall within the blind spot of the sensors before or after a continuous alarm sounds. It would not be possible to detect objects that are higher up and projecting, e.g. wall projections. Parking spaces may be detected although these are not suitable.

There may be other functional limitations in the following situations, for example:

- If the sensors are soiled or iced up.
- In heavy fog, rain or snow.
- On uneven surfaces, e.g. gravel roads.
- On slippery surfaces.
- On steep inclines or downhill gradients.
- If leaves have gathered or snow has piled up in the parking space.

To ensure the ultrasonic sensors remain fully operational, they must be kept clean and free of ice. When cleaning the sensors using a high pressure cleaner, avoid direct and sustained contact with a high-pressure water jet. Furthermore, when using high pressure cleaners, a distance of at least 30 cm from the sensors must be maintained.

⚠

The Parking Maneuver Assistant (PMA) cannot replace the driver's personal judgement of the traffic situation. Also check the traffic situation around the vehicle by looking around, otherwise there may be a risk of an accident as a result of road users or objects which lie outside the detection range of the Park Distance Control. Loud sound sources outside and inside the vehicle may mask the acoustic signals of the Parking Maneuver Assistant (PMA) or the Park Distance Control (PDC).

G12 Driver Assistance Systems

20. Cruise Control

20.1. Introduction

Two cruise control functions can be used in the G12. The cruise control with braking function (DCC) is part of the basic equipment.

ACC Stop&Go can also be obtained if the customer opts for the Active Driving Assistant Plus optional equipment (OE 5AT).

Other features of the Active Driving Assistant Plus optional equipment (OE 5AT) are the Active Lane Keeping Assistant and the Traffic Jam Assistant. When used in conjunction with these systems, ACC Stop&Go provides optimum support for the driver.

The cruise control systems support the driver with adapting the speed, distance and driving style to the traffic conditions, but do not relieve him of his responsibility. The driver must actively intervene, e.g. by braking, steering or taking evasive action, as otherwise there is a risk of an accident.

20.2. Cruise control with braking function

The cruise control with braking function is included as part of the G12's basic equipment. The system is also Known as "Dynamic Cruise Control" (DCC). Dynamic Cruise Control (DCC) supports the driver on roads with less traffic by keeping the speed constant irrespective of rolling resistances (incline, downhill driving and vehicle load). In spite of the support, the driver remains responsible for control of the vehicle. It is possible to override the DCC function at any time by braking or accelerating the vehicle.

20.2.1. Control functions

Cruise control

The cruise control calculates a target acceleration or deceleration based on the speed set by the driver and the actual speed.

Acceleration and deceleration

The driver can specify the set speed or acceleration via the rocker switch on the multifunction steering wheel (MFL).

Cruise control on bends

Another purpose of this function, also referred to as the "lateral acceleration controller", is to prevent the lateral acceleration from increasing above an acceptable level when cornering with the cruise control switched on. A lateral acceleration is calculated from the driving speed and yaw rate. This value is compared with a speed-dependent limit in order to achieve the following seemingly contradictory objectives:

- Disruptive and overly restrictive interventions are avoided if the driver himself would also prefer high lateral acceleration.
- Useful interventions and therefore also significant limitations in dynamics are effected at high speeds. Most drivers find an overly high lateral acceleration in these situations unpleasant, which is why a lower limit value is used.

The output variable for the cornering cruise control is also used as a set-point value for the longitudinal acceleration.

Prioritization of the partial set-point value

The set-point value with the highest priority according to the situation is selected from the longitudinal acceleration set-point values for the control functions referred to above. Signals are filtered to prevent abrupt jumps when adjusting the set-point values.

Estimation of disturbance force

An acceleration or brake force must be calculated in order to be able to apply the prioritized longitudinal acceleration with the assistance of the actuators. Example: more driving power is required to achieve the same longitudinal acceleration during an uphill journey than on the flat. If the vehicle needs to decelerate when travelling up hill, less braking force is required compared to driving on the flat. In order to be able to correctly calculate the forces required, the precise value of the gradient and also the weight of the vehicle, the rolling resistance, the drag and other acceleration forces must be known. As a sensor system that can monitor all of these disturbances does not exist, an estimated value is calculated instead by comparing the following two variables:

- Actual movement variables of the vehicle.
- Anticipated movement variables of the vehicle as a result of the driving power and braking forces currently acting on the vehicle.

The extent of the disturbing force determined using this method is taken into account during subsequent processing of the longitudinal acceleration setpoint value by means of addition or subtraction.

20.2.2. Activation of the actuators

Driving power and/or braking forces must be introduced in order to produce the longitudinal acceleration calculated by the control functions and thus compensate for disturbing forces acting on the vehicle. To accelerate the vehicle, a setpoint value for the drive is usually transmitted. In exceptional cases during downhill driving on a steep gradient, it may be necessary to activate the brake to ensure the acceleration does not exceed a specific value.

If the vehicle needs to be decelerated, the extent of the contribution that may be required by the drive towards the deceleration, and therefore the braking effect of the engine and transmission, is initially determined. This value is output to the Digital Motor Electronics (DME) or and electronic transmission control (EGS). If this value cannot be achieved by the drivetrain alone, the additional amount required is transmitted to the Dynamic Stability Control (DSC).

The vehicle's brake lights are also switched on if the brakes are noticeably actuated in order to produce the desired deceleration.

20.2.3. Operation

The driver has the option of adjusting the set speed in small or large increments, which is then set and maintained by the system by controlling the drive and brakes. It can be changed using the left-hand switch block on the multifunction steering wheel (MFL). The speed is increased or reduced by 1 km/h by tapping the rocker switch. Each time the rocker button is pressed beyond the pressure point, the speed increases or reduces by 10 km/h. The DCC steadily maintains a selected speed from about 30 km/h.

The set speed is indicated in the instrument cluster (KOMBI) in the familiar way; by a mark that moves round the speed reading. Notes are added to the displays in the instrument cluster if necessary.

If the vehicle's own deceleration is not sufficient to maintain the preset speed, the brake is activated accordingly.

The adjustment range for the set speed is limited to a maximum of 210 km/h.

If ECO PRO or SPORT mode is activated, the cruise control is also set to a fuel-efficient or sporty driving style. Due to the fuel-efficient driving style in ECO PRO driving mode, in some situations the vehicle's speed may exceed or drop below the set speed, for example on downhill gradients or inclines.

G12 Driver Assistance Systems

20. Cruise Control

G12 Dynamic Cruise Control (DCC) buttons

Index	Explanation
1	Button for activating or deactivating the Dynamic Cruise Control (DCC)
2	Rocker switch for changing the set speed
3	“SET” button for setting the speed of cruise control
4	Button for calling up a saved set speed/temporarily switching off the cruise control

The system is interrupted automatically in the following situations:

- If the brakes are used.
- If the selector lever position is moved out of position "D".
- If the Dynamic Traction Control (DTC) is activated or the Dynamic Stability Control (DSC) is deactivated.
- If the Dynamic Stability Control (DSC) is performing an adjustment.

20.3. Active Cruise Control with Stop&Go function

The Active Cruise Control with Stop&Go function, ACC Stop&Go, is offered for the G12 as part of Active Driving Assistant Plus optional equipment (OE 5AT).

ACC Stop&Go adjusts a driver-specified set speed and, if required by the traffic situation, also automatically adjusts the preselected following distance to the vehicle driving ahead (detected vehicles include passenger cars, trucks and motorbikes). The application range of ACC Stop&Go ranges from higher speeds down to a standstill. The distance and the speed are automatically adjusted in this range.

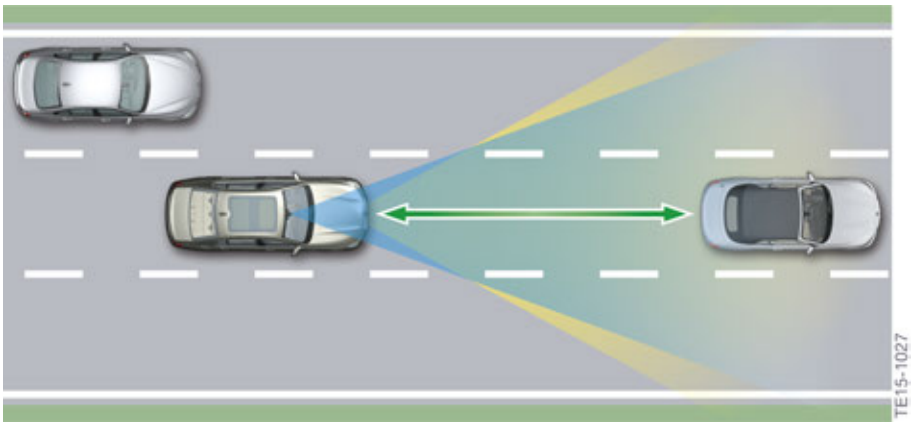

G12 Active Cruise Control

Depending on the stationary time, driving off from a standstill is performed automatically or in response to a prompt by the driver. ACC Stop&Go not only detects vehicles that are slowly coming to a halt, but also stationary vehicles.

Due to improved monitoring in front of the vehicle, the system is capable of reacting more quickly to vehicles swinging in and out and turning off.

The extended application range has been achieved by the incorporation of the KAFAS stereo camera. Image data is evaluated by the ACC Stop&Go system. The KAFAS control unit clearly detects vehicles when their rear ends are recorded by the camera. In addition, the KAFAS control unit ensures that the driving lane information, vehicle positions and movements are determined.

In addition to image data, radar data is also gathered and evaluated by the radar sensors. This fusion of image and radar data makes possible the clear identification of lane markings and the distinction between stationary vehicles and other fixed objects.

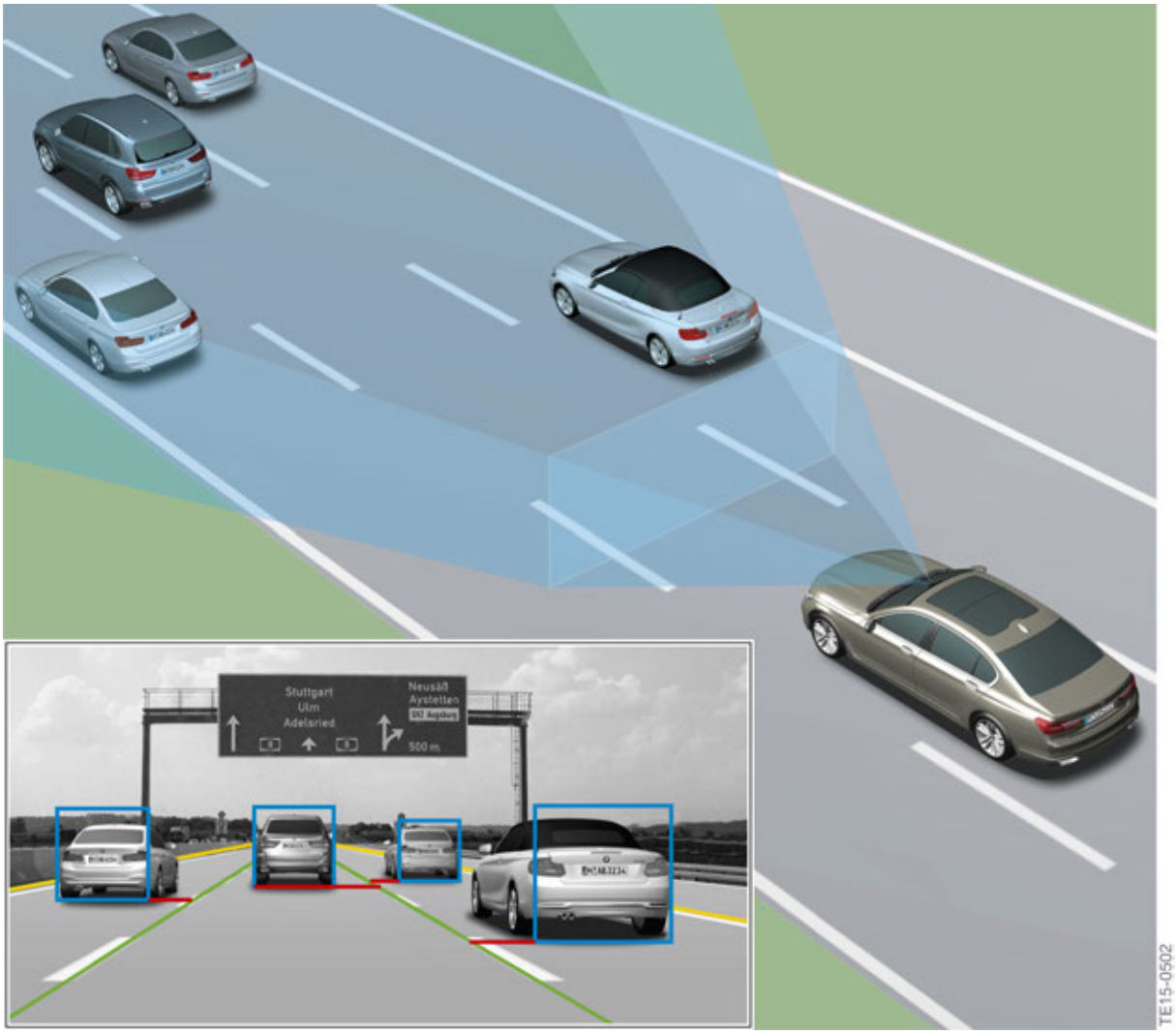

Object detection provided by a combination of radar sensor and KAFAS stereo camera

A 77 GHz radar sensor emits bundled electromagnetic waves. The echoes reflected by objects are received and evaluated by the radar sensor. This enables information about objects located in front of the radar sensor to be obtained. This information includes size, distance and the deduced speed. The radar sensor of the system can identify vehicles ahead up to a distance of 200 m, to a large extent irrespective of weather conditions.

The sensor is located behind the air inlet grille on the front bumper.

G12 Installation location of front radar sensor for ACC Stop&Go

Index	Explanation
1	Sensor for ACC Stop&Go
2	Removable grille

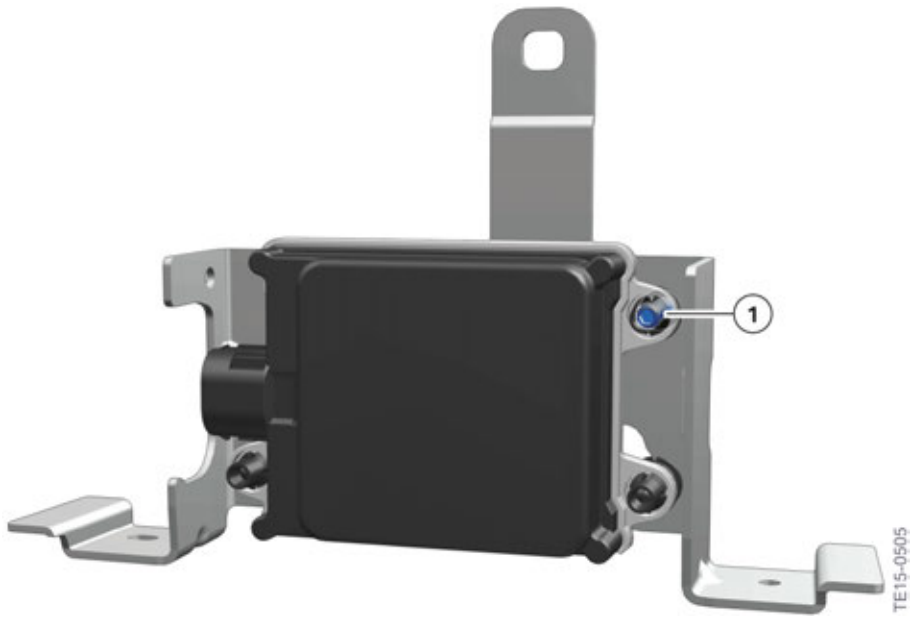

G12 Front radar sensor for ACC Stop&Go

Index	Explanation
1	Adjustment feature

Thanks to the radar sensor's improved detection capability and alignment with the image data from the KAFAS stereo camera, vehicles in neighboring lanes are also detected. If these vehicles are driving in their own lane, then ACC Stop&Go adapts the speed to the vehicle pulling in or vehicle ahead. As a result, a time lag selected by the driver is constantly maintained.

ACC Stop&Go adjusts the speed if there is no vehicle driving directly ahead and automatically switches to distance control if the sensor system detects a slower vehicle in its lane. The system's Stop&Go function brings the vehicle to a complete standstill if necessary.

If the vehicle ahead drives off again after a standstill, the driver is informed with a note.
To drive off again, the driver must acknowledge this information by pressing the RES/CNCL button or the accelerator pedal. Only if the duration of the standstill is very short (about 3 seconds) is the starting process effected fully automatically by ACC Stop&Go.

In this way, ACC Stop&Go supports the driver not only in flowing traffic, but also in traffic jam situations, both on multiple-lane highways and ordinary roads and on urban arterial and ring roads.

The adjustment range for the set speed is limited to a maximum of 210 km/h.

If ECO PRO or SPORT mode is activated, the Active Cruise Control with Stop&Go function is also set to a fuel-efficient or sporty driving style. Due to the fuel-efficient driving style in ECO PRO driving mode, in some situations the vehicle's speed may exceed or drop below the set speed, for example on downhill gradients or inclines.

20.3.1. Control functions

The calculations are performed in the optional equipment control unit SAS.

Cruise control

In principle, the cruise control in the ACC Stop&Go system works in exactly the same way as the Dynamic Cruise Control (DCC) system.

Cruise control on bends

The cruise control of the ACC Stop&Go on bends is based on the control characteristics of the Dynamic Cruise Control (DCC). If an object is lost on bends, the system waits to see whether the object reappears (transition curve). The vehicle only accelerates if it does not reappear or the sensor system no longer detects an object. Tight bends are detected via the data of the Dynamic Stability Control system (DSC) and the navigation system and the speed adjusted if necessary.

Distance control (ranging)

The distance control is the core function of the ACC Stop&Go system.

The driver can select a desired distance in four stages using the multifunction button on the multifunction steering wheel (MFL). From this preselection ACC Stop&Go calculates the reference distance to the vehicle driving ahead for the control. In vehicles with the Driving Assistant Plus optional equipment (OE 5AT), the distance is adjusted using the rocker button.

ACC Stop&Go calculates the reference distance for the control from this preselection. The following distance most recently selected is saved depending on the key being used.

The reference distance during the journey is proportional to the driving speed. At a lower driving speed and at standstill, the proportional distance to the driving speed is no longer used for the ACC Stop&Go, but a fixed value in metres.

If a vehicle moves into the driver's lane, which is anticipated due to the current driving condition, or if the driver is approaching a vehicle driving ahead, the ACC Stop&Go function discretely adapts the speed to the vehicle pulling in or vehicle ahead.

The distance control uses the prepared object data with the highest diagnostic statistic as input variables. The distance control takes into consideration the following situations in particular:

- **Maximum values for acceleration and deceleration:**
  The maximum values for acceleration and deceleration of the ACC Stop&Go system below about 50 km/h are dynamic values. They correspond to the acceleration and deceleration values that the driver would use himself and considers comfortable. In situations where sharper deceleration is required than the system offers as part of the speed adjustment feature, a visual and acoustic signal is issued to the driver to inform him to take over vehicle handling. Depending on the situation, the ACC Stop&Go accelerates by a maximum of about 2 m/s² and decelerates by a maximum of about 4 m/s².
- **Stop and start stability:**
  In the case of very heavy traffic and very low driving speed, the risk of rear-end collisions increases through heavy acceleration and braking. The ACC Stop&Go distance controller is therefore designed to decelerate as early as possible, but not more than the vehicle ahead. The system can decelerate by up to 2.5 m/s² at the most during subsequent operation, and by up to 4 m/s² at the most when stopping.

Request to take over vehicle handling

When ACC Stop&Go is no longer able to maintain a safe distance or a critical situation is detected, e.g. on account of very high differential speeds or an insufficient maximum deceleration, two short warning signals sound and the orange vehicle symbol in the instrument cluster or the Head-Up Display (optional equipment OE 610) flashes. The system continues to perform its control function and prompts the driver to take over vehicle handling and to keep their distance accordingly.

20.3.2. Operation

Activation and deactivation

The activation and deactivation of the ACC Stop&Go and the Dynamic Cruise Control are almost the same. ACC Stop&Go can either be activated while driving or at a standstill. For safety reasons, when the vehicle is at a standstill the function can only be put in Standby mode or deactivated while the foot brake is applied.

If the function is active, it can be interrupted by pressing the RES/CNCL button. The distance and speed will no longer be maintained and the set speed is greyed out in the instrument cluster.

The driver can select a desired distance in four stages using the left-hand multifunction button on the multifunction steering wheel (MFL). The last selected following distance is saved depending on the key being used.

G12 Driver Assistance Systems

20. Cruise Control

The following graphic shows the button assignment for the assistance systems on the multifunction steering wheel (MFL) in vehicles **with** the Active Driving Assistant Plus optional equipment (OE 5AT):

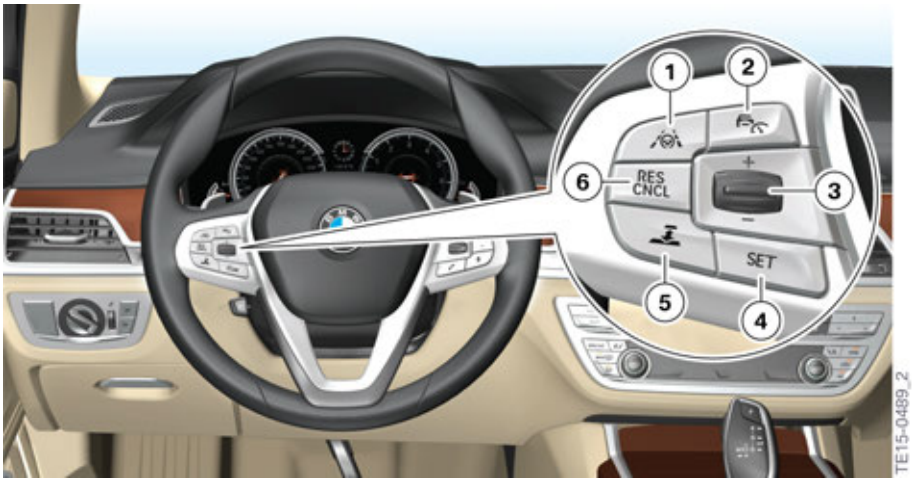

G12 Buttons for ACC Stop&Go with Active Driving Assistant Plus optional equipment (OE 5AT)

Index	Explanation
1	Button for activating or deactivating the Active Lane Keeping Assistant and Traffic Jam Assistant
2	Button for activating or deactivating ACC Stop&Go
3	Rocker switch for changing the set speed
4	“SET” button for setting the speed of cruise control
5	Button for adjusting the distance of the driver's vehicle to the vehicle driving ahead
6	Button for calling up a saved set speed/temporarily switching off the cruise control

The following conditions must also be satisfied for activation:

- Seat belt fastened and doors closed
- Drive position "D" engaged and brake pressed
- Engine running
- Parking brake not activated
- Camera and radar sensor operational
- No system faults detected

The system is interrupted automatically in the following situations:

- If the brakes are used.
- If the selector lever position is moved out of position "D".
- If the Dynamic Traction Control (DTC) is activated or the Dynamic Stability Control (DSC) is deactivated.
- If the Dynamic Stability Control (DSC) is performing an adjustment.
- If the seat belt is unfastened and the driver's door is opened in a stationary vehicle.
- If the system has not detected an object for a long time, e.g. on rarely frequented sections of road with no distinct edge.
- If the detection range of the radar is impaired, e.g. due to contamination or heavy precipitation.
- Following a longer immobilization period, if the vehicle has been decelerated to a standstill by ACC Stop&Go.

The set speed is indicated in the instrument cluster in the familiar way; by a mark that moves round the speed reading. If ACC Stop&Go is activated, this mark is green, whereas in "Standby" mode it is grey and the last set speed is displayed. After the ACC Stop&Go function is activated or after the driver has adjusted the set speed, the current digital value is displayed. If the distance is changed, a symbol appears briefly as an acknowledgement. The screen symbol masks are for example the set speed and the distance bar. With each subsequent operation the display is shown for another three seconds.

The distances set by the driver, as well as the distances to any vehicles driving ahead, that must be maintained to ensure a safe distance are displayed between the two round instruments (speed reading and engine speed display). The distance setting is stored for the ID transmitter currently being used. Like for DCC, it is also necessary that the symbol screen masks are complemented if necessary with notes in the instrument cluster for ACC Stop&Go.

With active control the displays are also shown in the Head-Up Display (optional equipment OE 610).

If the system can no longer adjust a safe distance, for example due to very high differential speeds, then the driver is prompted to take over the vehicle handling by a flashing red vehicle symbol and an acoustic signal.

Displays in the instrument cluster when ACC Stop&Go is activated

G12 Driver Assistance Systems

20. Cruise Control

Symbols	Explanation
TE15-0971	Display lights up black/grey, no vehicle symbol shown: System has been interrupted.
TE15-1033	Distance control briefly paused, as the accelerator pedal is pressed.
TE15-0972	Vehicle symbol and distance bars flash red and a signal sounds: Request for intervention by braking and, if required, evasive action.
TE15-0973	Distance control (ranging) active: ACC Stop & Go adjusts to the set distance (distance 1). The speedometer mark for the Active Cruise Control with Stop&Go function also lights up green in the speed reading.

Symbols	Explanation
	Distance control (ranging) active: ACC Stop&Go adjusts to the set distance (distance 2). The speedometer mark for the Active Cruise Control with Stop&Go function also lights up green in the speed reading.
	Distance control (ranging) active: ACC Stop&Go adjusts to the set distance (distance 3). The speedometer mark for the Active Cruise Control with Stop&Go function also lights up green in the speed reading. Distance 3 is about half the value of the km/h display in metres and is pre-set automatically when the system is first switched on.
	Distance control (ranging) active: ACC Stop&Go adjusts to the set distance (distance 4). The speedometer mark for the Active Cruise Control with Stop&Go function also lights up green in the speed reading.

20.3.3. System wiring diagram

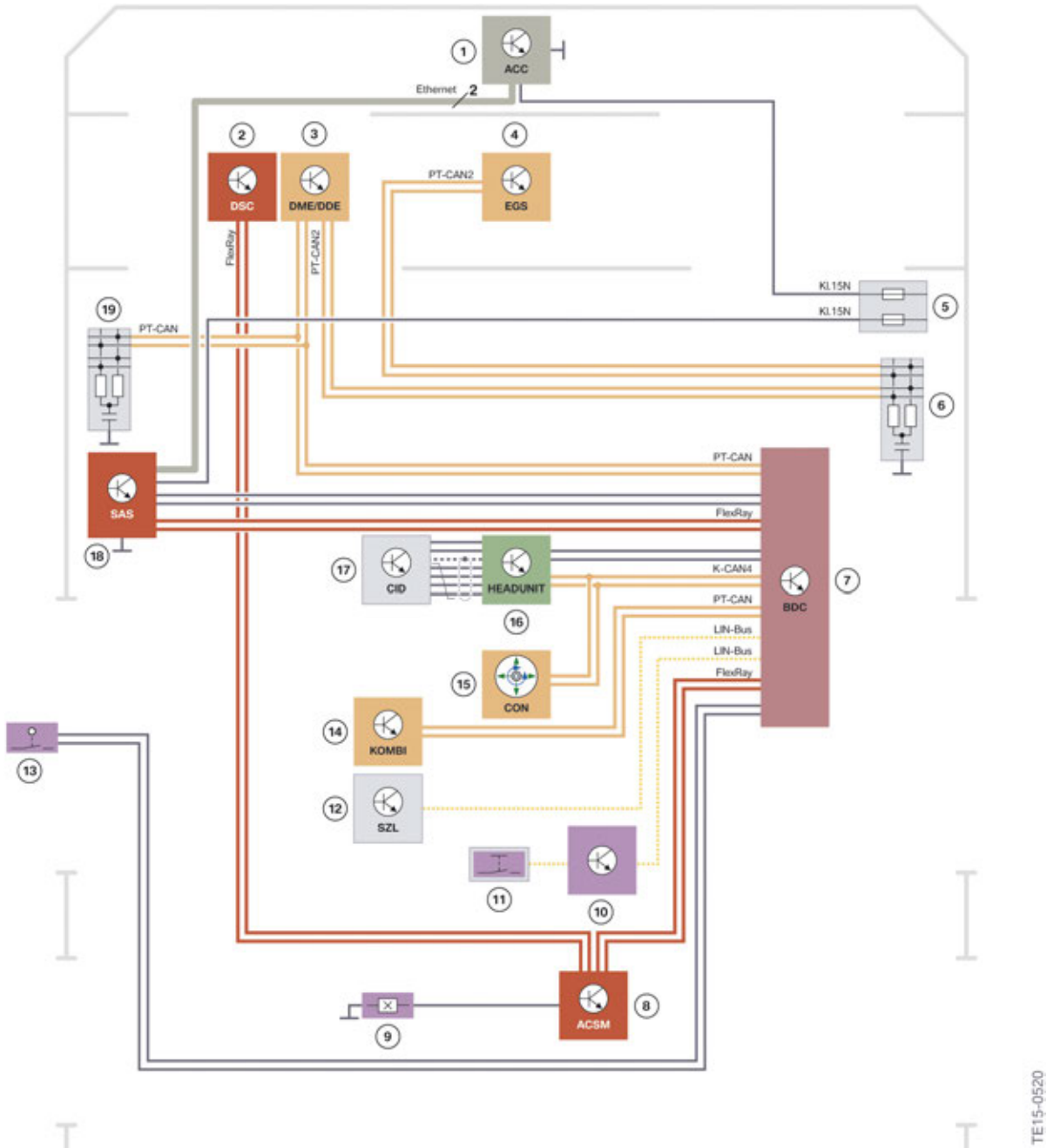

G12 System wiring diagram for Active Cruise Control with Stop&Go

G12 Driver Assistance Systems

20. Cruise Control

Index	Explanation
1	Active Cruise Control (ACC) Stop&Go
2	Dynamic Stability Control (DSC)
3	Digital Motor Electronics (DME)
4	Electronic transmission control (EGS)
5	Fuse for front right power distribution box
6	CAN terminator
7	Body Domain Controller (BDC)
8	Advanced Crash Safety Module (ACSM)
9	Seat belt buckle contact, driver's seat
10	Audio control panel
11	Intelligent Safety button
12	Steering column switch cluster (SZL)
13	Door contact, driver's door
14	Instrument panel (KOMBI)
15	Controller (CON)
16	Head Unit High 2 (HU-H2)
17	Central Information Display (CID)
18	Control unit for optional equipment system (SAS)
19	CAN terminator

G12 Driver Assistance Systems

21. Speed Limit Warning

The driver has the option of setting a speed at which a warning is issued when the system is activated and the preset speed is exceeded.

21.1. Operation

The speed limit warning can be switched on and off in the iDrive menu, as well as the speed setting at which the warning should be issued, by making the following selection via the controller:

- "My Vehicle"
- "Vehicle settings"
- "Speed limit warning"
- "Warning at:"
- Turn controller until the desired speed is displayed
- Press controller
- Speed limit warning is saved

Speed limit warning display on the CID

This increased the speed range in which the system can be used from 40 km/h to 60 km/h.

The below graphic shows when the lateral guidance systems were introduced:

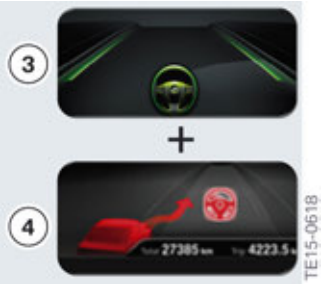

Overview of Lateral Guidance Assistants

Index	System	Functional characteristics of the systems
3	Traffic Jam Assistant (from 2015 with launch of G12)	• 0 - 70 km/h • Traffic jam following distance control with lane center guidance • No road-type restrictions
3	Active Lane Keeping Assistant (from 2015 with launch of G12)	• 70 - 210 km/h • Lane center guidance • No road-type restrictions
4	Active Lane Keeping Assistant with Side Collision Avoidance (from 2015 with launch of G12)	• 30 - 70 km/h (warning in form of single steering wheel pulse) • 70 - 210 km/h (corrective steering interventions) • Active steering interventions in situations where a collision is imminent • No road-type restrictions

The Active Lane Keeping Assistant with Side Collision Avoidance have been introduced for the first time in the G12.

G12 Driver Assistance Systems

23. Lane Keeping & Traffic Jam Assistants

The Active Lane Keeping Assistant and Traffic Jam Assistant is part of the Active Driving Assistant Plus optional equipment (OE 5AT).

The system assists the driver in keeping the vehicle in lane by initiating corrective steering interventions if required.

G12 Active steering intervention

23.1. Functional principle

Depending on the speed, the system is guided by the lane edges or vehicles driving ahead. The position of the lane edges and the vehicle driving ahead is determined with the help of five radar sensors and the KAFAS stereo camera.

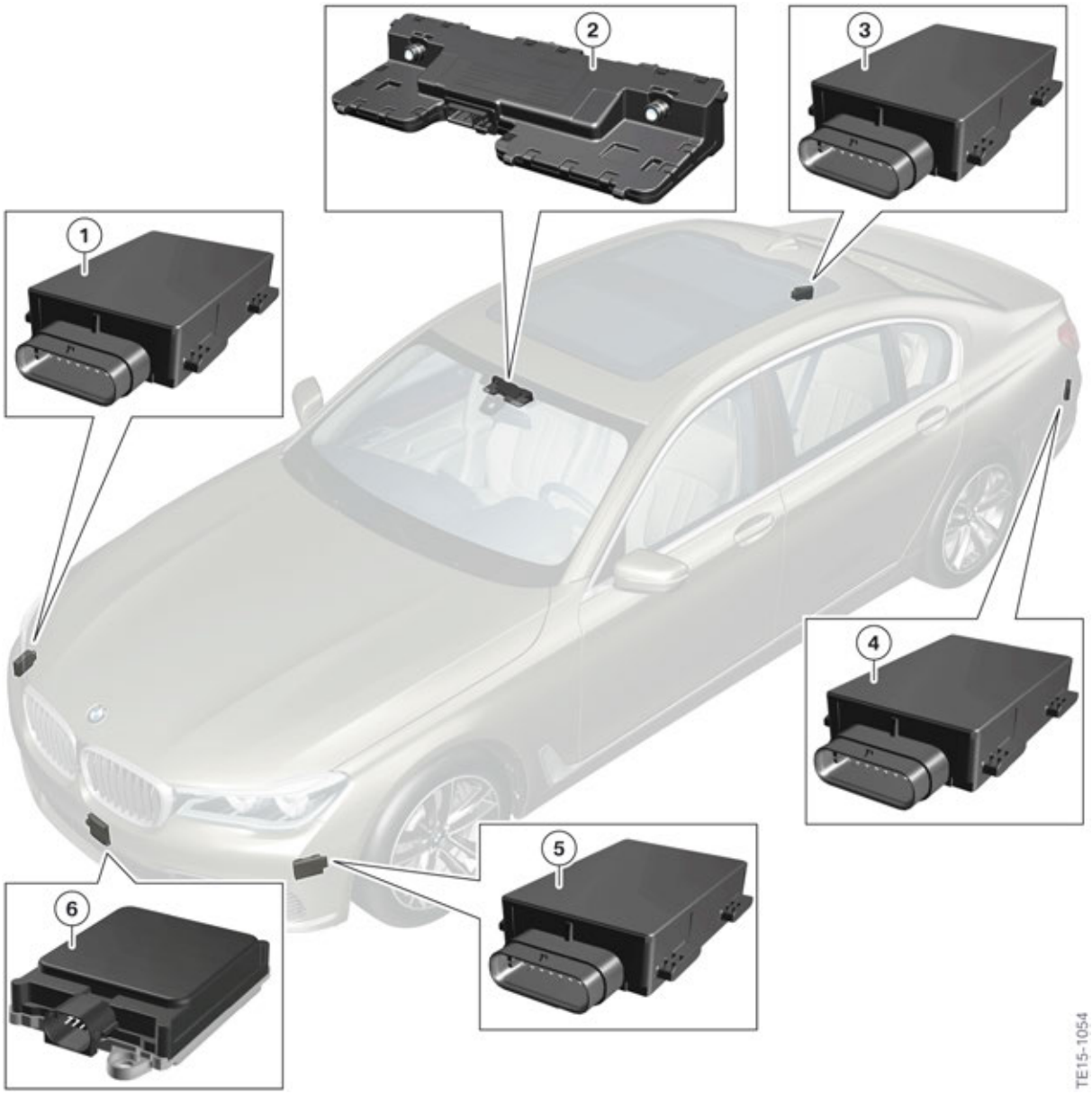

G12 Installation locations of radar sensors and KAFAS stereo camera

Index	Explanation
1	Control unit for radar sensor, right (RSR)
2	KAFAS stereo camera
3	Blind Spot Detection, right (primary)
4	Blind Spot Detection, left (secondary)
5	Control unit for radar sensor, left (RSL)
6	Active Cruise Control (ACC) (FRR)

G12 Driver Assistance Systems

23. Lane Keeping & Traffic Jam Assistants

The system has two sub-functions: the Traffic Jam Assistant (second generation) and the Active Lane Keeping Assistant.

The Traffic Jam Assistant can be used within the speed range of 0 to 70 km/h, the Active Lane Keeping Assistant on the other hand from 70 to 210 km/h.

The table below shows an overview of the differences between the two sub-functions:

Traffic Jam Assist	Active Lane Keeping Assistant
Speed range 0 - 70 km/h	Speed range 70 - 210 km/h
Corrective steering interventions in the direction of the vehicle driving ahead	Corrective steering interventions in the direction of the center of the lane
Detected lane markings taken into consideration	Gaps in lane markings can be bridged for a limited time by aligning with vehicle ahead

If the Traffic Jam and Active Lane Keeping Assistants are activated, Side Collision Avoidance is also interlinked.

23.1.1. Hands-off-Detection

To ensure the driver is alert and able to react, he is urged to always have both hands on the steering wheel when the Active Lane Keeping Assistant and Traffic Jam Assistant are activated (established in the German road traffic regulations). If the driver takes both hands off the steering wheel rim, control is stopped after a few seconds during active control and the driver is requested to take over steering.

A capacitive sensor (hands-off detection sensor) with corresponding touch detection electronics in the steering wheel determines whether the steering wheel is being touched.

The electronic touch detection is installed in the steering wheel below the driver's airbag.

G12 Steering wheel with touch detection control unit

The hands can only be detected on the steering wheel rim, not on the steering wheel spokes, hub or impact plate.

The sensor consists of a mat which is wrapped round the steering wheel rim.

G12 Sensor mat for touch detection

Index	Explanation
1	Sensor mat
2	Connection for capacitive touch detection
3	Connection for steering wheel heating

The Active Lane Keeping Assistant and Traffic Jam Assistant is deactivated a few seconds after a hand is no longer touching the steering wheel rim. In order to be able to use these systems, the steering wheel must be grasped. When driving with gloves on or with a steering wheel cover fitted, the sensor may not be able to detect contact with the steering wheel, which means the system may not be able to be used.

The diagnosis of the Hands-off-Detection is performed in the Body Domain Controller (BDC).

23.1.2. Functional prerequisites

The following prerequisites must be met in order for the Active Lane Keeping Assistant and Traffic Jam Assistant to be used:

- Speed must be below 210 km/h.
- Above 70 km/h: both lane edges must be detected.
- Below 70 km/h: both lane edges or a vehicle driving ahead must be detected.
- The lane width must be sufficient.
- The vehicle should be positioned as centrally as possible in the lane.
- There must be a sufficient curve radius.
- At least one hand must be on the steering wheel rim.
- The turn indicator must not be activated.
- The camera calibration process must be completed immediately after vehicle delivery.

The active lateral control function with data evaluation of the KAFAS stereo camera is implemented with the assistance of the lane markings identified on the left and right.

In order for the system to be activated, two lane boundary lines must be detected. Below a speed of approximately 70 km/h a vehicle driving ahead in the same lane is sufficient to activate the system.

The system is put in Standby mode if the marginal conditions are not satisfied (e.g. hands not on steering wheel, lane too narrow or dazzling of KAFAS stereo camera). Once all marginal conditions have been met, the system is re-enabled automatically.

To activate the system, the speed of the vehicle is another input quantity that is evaluated. The system uses these values to decide which function is enabled. As mentioned above, the threshold values are set as follows:

- The Traffic Jam Assistant can be enabled within a speed range of 0 to 70 km/h.
- The Active Lane Keeping Assistant can be enabled within a speed range of 70 to 210 km/h.

23.1.3. Lane change

For a lane change to be as comfortable as possible, the Active Lane Keeping Assistant and Traffic Jam Assistant is put silently into Standby mode when the turn indicator is activated and reactivates itself automatically once the turn indicator is back in its initial position and a lane change has occurred.

23.1.4. Function logic

The main function logic of the lateral guidance is implemented in the optional equipment system (SAS) control unit.

The majority of the data for the function is provided by the KAFAS stereo camera, where algorithms for the lane and object detection run.

Vehicle dynamics data, such as the driving speed, wheel speeds, yaw rate, steering angle, lateral acceleration, longitudinal acceleration, etc., is provided by the rest of the vehicle network via a FlexRay or CAN connection.

A target trajectory (also known as a path curve) is calculated in the optional equipment system (SAS) control unit. This is used to determine whether a steering correction is required.

23.1.5. Steering interventions

If the current course of the vehicle deviates too much from the target trajectory (path curve), a steering correction is initiated.

The steering intervention is a corrective measure. This means the driver is not relieved of his duty to steer the vehicle. As the corrective steering interventions are limited to approximately 1.5 m/s² based on the lateral acceleration, the system cannot navigate curves above the respective speed-dependent curve radius without the driver's assistance. The driver must therefore steer the vehicle at the same time in order to stay on the roadway.

The target trajectory and required steering corrections are calculated based on the driving speed as follows:

Speed range 0 to 70 km/h:

- The position and previous movements of the vehicle driving ahead are given priority when determining the appropriate steering corrections.
- Detected lane markings are taken into account to avoid unwanted steering corrections that would result in leaving the lane.
- Corrective steering interventions in the direction of the center of the lane are initiated if the vehicle detects there is not a vehicle driving ahead.

Speed range 70 to 130 km/h:

- Corrective steering interventions in the direction of the center of the lane are initiated.
- It is possible to bridge the gap for a limited time where lane markings are not detected by estimating the course of the lane based on the vehicle driving ahead.

Speed range 130 to 210 km/h:

- Corrective steering interventions in the direction of the center of the lane are initiated.
- For safety reasons above a driving speed of approximately 130 km/h the course of the lane is **not** estimated using the vehicle driving ahead.

The vehicle driving ahead is given priority as the "correction target" at speeds ranging between approximately 0 and 70 km/h due to the limited detection of lane markings.

In traffic jams or slow-moving traffic following distances are often extremely small (< 10 m) due to tailgating and lanes ahead are often partially covered due to staggered driving.

This means the KAFAS stereo camera is unable to correctly interpret the lane markings in some cases.

When classifying the object driving ahead, vehicles such as motorbikes are not used as the "correction target".

Steering torque

The driving dynamics function software in the Dynamic Stability Control (DSC) control unit calculates a target steering torque based on the curve nominal value. The target steering torque is then converted to an engine torque by the Electronic Power Steering (EPS), which finally results in a steering wheel movement at the wheels.

The maximum steering torque has been set in such a way that it can always be overruled by the driver and therefore steering past the maximum steering torque is possible.

23.1.6. Operation

The system is switched on via the Traffic Jam Assistant button on the multifunction steering wheel (MFL).

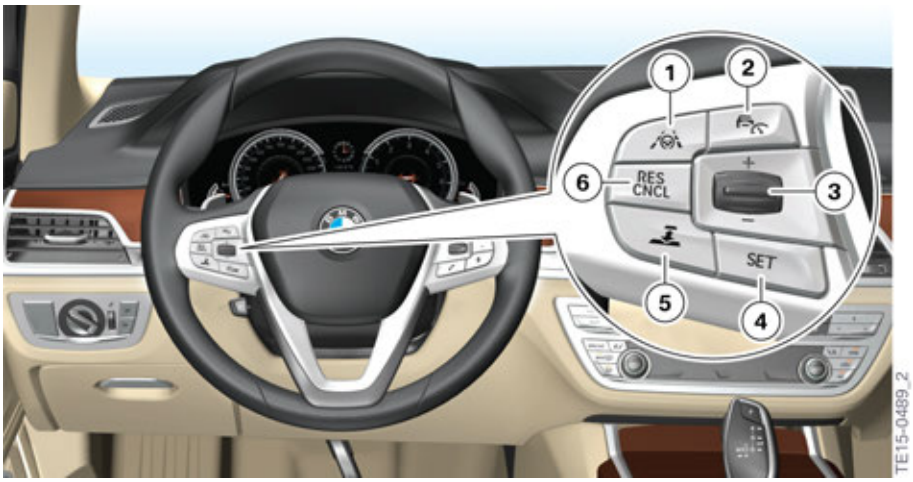

G12 Buttons for ACC Stop&Go with Active Driving Assistant Plus optional equipment (OE 5AT)

Index	Explanation
1	Button for activating or deactivating the Active Lane Keeping Assistant and Traffic Jam Assistant
2	Button for activating or deactivating ACC Stop&Go
3	Rocker switch for changing the set speed
4	“SET” button for setting the speed of cruise control
5	Button for adjusting the distance of the driver's vehicle to the vehicle driving ahead
6	Button for calling up a saved set speed/temporarily switching off the cruise control

Displays

Symbols	Explanation
TE15-0986	Grey steering wheel symbol: • The system has been interrupted and will not make any further steering wheel movements. The system is in Standby mode. • Once the system conditions are met, the system reactivates itself automatically.
TE15-0982	Green steering wheel symbol and lane edges: • The system assists in keeping the vehicle in the lane.
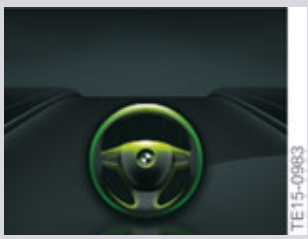 TE15-0983	Green steering wheel symbol, grey lane edges: • No lane edges detected. The vehicle follows the vehicle driving ahead.
TE15-0984	Yellow steering wheel symbol: • Request for driver to place hands back on the steering wheel (grasp steering wheel). System continues to be active.
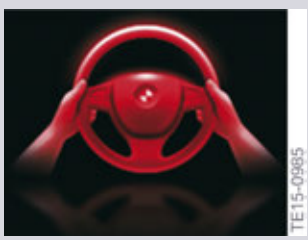 TE15-0985	Red steering wheel symbol and acoustic signal sounds: • The system has been interrupted. It will not make any further steering wheel movements.

Configuration options

The driver can change the system settings in the Intelligent Safety configuration menu.

G12 Driver Assistance Systems

23. Lane Keeping & Traffic Jam Assistants

23.1.7. System wiring diagram

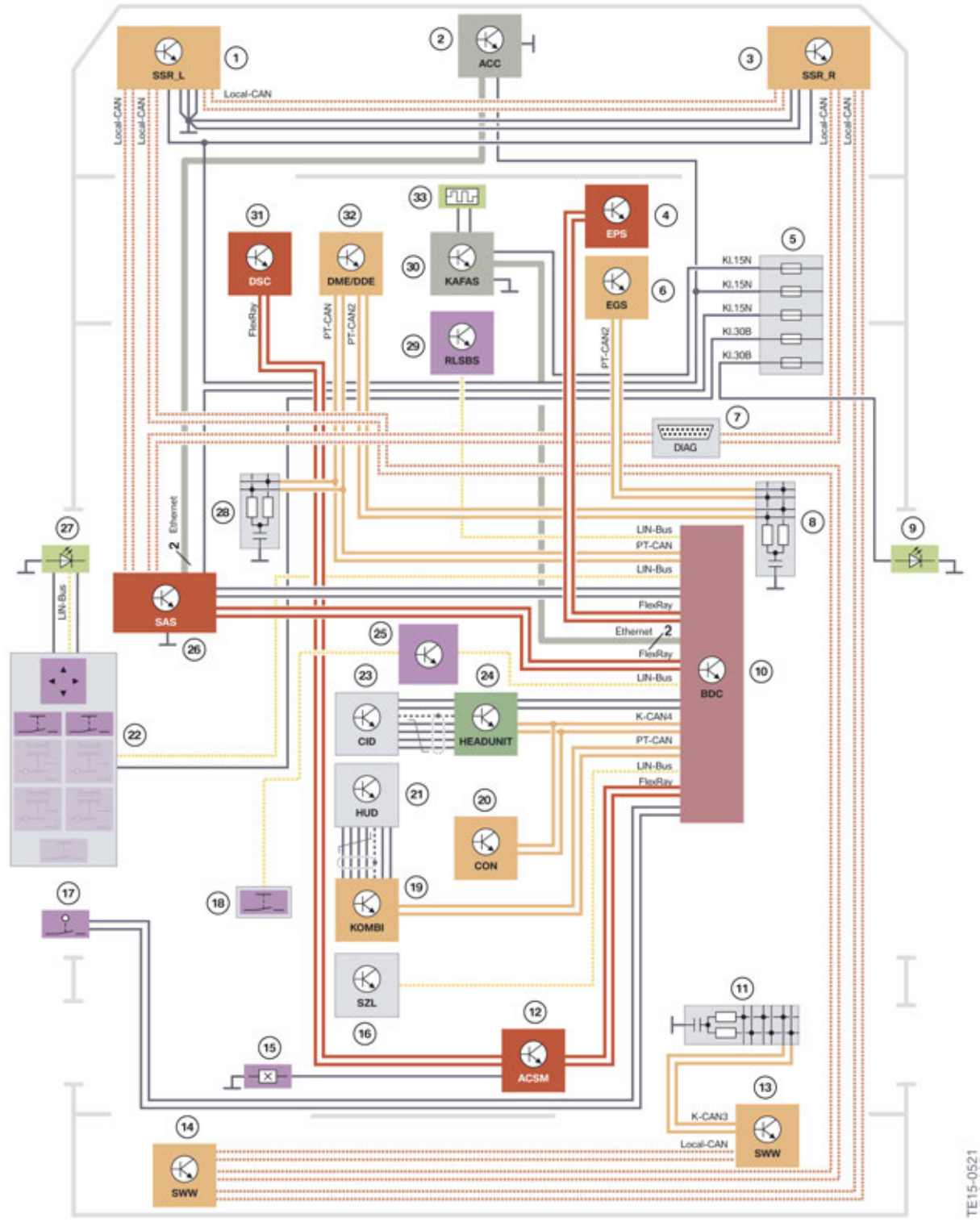

G12 Active Driving Assistant Plus (OE 5AT)/ Active Lane Keeping Assistant & Traffic Jam Assistant wiring diagram

G12 Driver Assistance Systems

23. Lane Keeping & Traffic Jam Assistants

Index	Explanation
1	Control units for left radar sensor (RSL) (side radar sensor for the front left Side Collision Avoidance)
2	Active Cruise Control (ACC)
3	Control units for right radar sensor (RSR) (side radar sensor for the front right Side Collision Avoidance)
4	Electronic Power Steering (EPS)
5	Fuse for front right power distribution box
6	Electronic transmission control unit (EGS)
7	Diagnostic socket
8	CAN terminator
9	Signal unit (LED) in right mirror glass
10	Body Domain Controller (BDC)
11	CAN terminator
12	Advanced Crash Safety Module (ACSM)
13	Blind Spot Detection, right (primary)
14	Blind Spot Detection, left (secondary)
15	Seat belt buckle switch, driver
16	Steering column switch cluster (SZL)
17	Driver's door lock switch
18	Intelligent Safety button
19	Instrument panel (KOMBI)
20	Controller (CON)
21	Head-Up Display (HUD)
22	Switch block for driver's door
23	Central Information Display (CID)
24	Head Unit High 2 (HU-H2)
25	Audio control panel
26	Control unit for optional equipment system (SAS)
27	Signal unit (LED) in left mirror glass
28	CAN terminator
29	Rain-light-solar-condensation sensor (RLSBS)
30	KAFAS stereo camera
31	Dynamic Stability Control (DSC)
32	Digital Motor Electronics (DME)
33	KAFAS stereo camera heating

23.1.8. Deactivation criteria

The Active Lane Keeping Assistant and Traffic Jam Assistant is deactivated automatically in the following situations:

- If the vehicle departs from the detected lane or the lane width does not meet the requirements.
- If the lane edges of the current lane are not detected by the KAFAS stereo camera.
- If no vehicle driving ahead is detected.
- The vehicle is travelling at a speed greater than 210 km/h.
- If the Hands-off-Detection cannot detect the hands (at least one hand) on the steering wheel rim. Switch-off occurs once a defined time threshold (several seconds) has elapsed.
- Due to the radius of the bend in the road, the inner lane edge is no longer detected due to the camera aperture angle.
- Pedestrian protection assumes the operating condition "Fault exists".
- If the turn indicator is on.
- The driver intervenes actively in the steering.
- If over a certain time period no lane edges are detected and there is not a vehicle driving ahead.
- If the driver manually deactivates the DSC (DSC off).
- If there is an intervention from the preventative pedestrian protection.
- After Dynamic Brake Control braking (brake assistant).

23.1.9. Limits of the system

When driving in narrow lanes, e.g. when driving through roadworks or when emergency lanes are formed, the system cannot be activated or used meaningfully.

⚠

Due to the limited detection capacity of the KAFAS stereo camera, the driver must remain alert and observant in order to be able to actively intervene at any time so as to avoid the risk of an accident. The system does not relieve the driver of personal responsibility for correctly judging the traffic situation. The driver is solely responsible for the vehicle.

G12 Driver Assistance Systems

24. Active Lane Keeping Assistant

The Active Lane Keeping Assistant with Side Collision Avoidance is part of the Active Driving Assistant Plus optional equipment (OE 5AT).

The system assists the driver in keeping the vehicle in lane and actively avoiding potential side collisions by initiating corrective steering interventions within a speed range from 70 km/h to 210 km/h. The system endeavours to orient the vehicle in its lane according to the situation and within the framework of the system limits.

The system consists of the following four sub-functions:

- Side Collision Avoidance
- Reduced Side Collision Avoidance
- Lane Departure Warning
- Blind Spot Detection

24.1. Side Collision Avoidance

The table below shows an overview of the functional characteristics of the "Side Collision Avoidance" sub-function:

Speed range	Warning functions	Corrective steering intervention
70 - 210 km/h	• Issued if the vehicle detects that it is getting critically close to another vehicle to the side • Physical warning in the form of vibration in the steering wheel using an unbalanced actuator • Visual warning in exterior mirror in the form of the corresponding warning light	• Corrective steering intervention in the direction of the available space on the roadway Requirements: • Detected lanes • Sufficient available space on the roadway 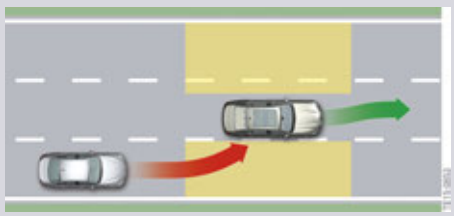

24.1.1. Reduced Side Collision Avoidance

The Reduced Side Collision Avoidance comes into play if it is not possible to adequately monitor the available space on the roadway or there is no available space on the roadway.

The Reduced Side Collision Avoidance is interlinked with the Active Lane Keeping Assistant and Traffic Jam Assistant functions.

The table below shows an overview of the functional characteristics of the "Reduced Side Collision Avoidance" sub-function:

Speed range	Warning function	Corrective steering intervention
30 - 210 km/h	• Issued if the vehicle detects that it is getting critically close to another vehicle to the side • Physical warning in the form of vibration in the steering wheel using an unbalanced actuator • Visual warning in exterior mirror in the form of the corresponding warning light • 30 - 70 km/h additional warning issued by single steering wheel pulse	• A corrective steering intervention is **not** initiated; instead only a single steering wheel pulse warning is issued in the opposite direction to the detected object the vehicle could collide with

24.2. Lane Departure Warning

The table below shows an overview of the functional characteristics of the "Lane Departure Warning" sub-function:

Speed range	Warning function	Corrective steering intervention
70 - 210 km/h	• Triggered in the event a lane departure is detected by the Lane Departure Warning function. The associated physical warning in the form of a vibration in the steering wheel using an unbalanced actuator is issued and visual warning in the exterior mirror in the form of the corresponding warning light.	• Corrective steering intervention in the direction of the original lane if vehicle moves towards neighboring lane Requirements: • Detected lanes 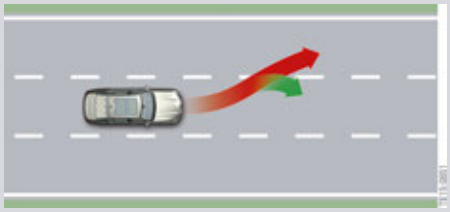

24.3. Blind Spot Detection

The table below shows an overview of the functional characteristics of the "Blind Spot Detection" sub-function:

Speed range	Warning function	Corrective steering intervention
70 - 210 km/h	• Triggered in the event a lane change that could result in a collision is detected by the Lane Departure Warning function. The associated physical warning in the form of a vibration in the steering wheel using an unbalanced actuator is issued and visual warning in the exterior mirror in the form of the corresponding warning light.	• Corrective steering intervention in the direction of the available space on the roadway when lane change intention is made and neighboring lane is obstructed Prerequisites: • Detected lanes • Sufficient available space on the roadway 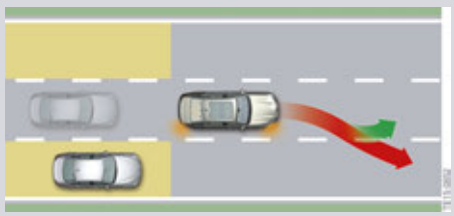

Further information can be found in the system descriptions of the respective sub-functions (see sections 8-10).

The Active Lane Keeping Assistant with Side Collision Avoidance does not relieve the driver of his overall responsibility for driving the vehicle. Due to the system limits be attentive in order to be able to actively intervene at any time. Otherwise, there is a risk of an accident.

Bayerische Motorenwerke Aktiengesellschaft
Händlerqualifizierung und Training
Röntgenstraße 7
85716 Unterschleißheim, Germany

Technical training.
Product information.

G12 Displays and Controls

Edited for the U.S. market by:
BMW Group University
Technical Training
ST1501 9/1/2015

BMW Service

General information

Symbols used

The following symbol is used in this document to facilitate better comprehension or to draw attention to very important information:

⚠

Contains important safety information and information that needs to be observed strictly in order to guarantee the smooth operation of the system.

Information status and national-market versions

BMW Group vehicles meet the requirements of the highest safety and quality standards. Changes in requirements for environmental protection, customer benefits and design render necessary continuous development of systems and components. Consequently, there may be discrepancies between the contents of this document and the vehicles available in the training course.

This document basically relates to the European version of left hand drive vehicles. Some controls and components are arranged differently in right-hand drive vehicles than shown in the graphics in this document. Further differences may arise as the result of the equipment specification in specific markets or countries.

Additional sources of information

Further information on the individual topics can be found in the following:

- Owner's Manual
- Integrated Service Technical Application.

Contact: conceptinfo@bmw.de

©2015 BMW AG, Munich

Reprints of this publication or its parts require the written approval of BMW AG, Munich.

The information contained in this document forms an integral part of the technical training of the BMW Group and is intended for the trainer and participants in the seminar. Refer to the latest relevant information systems of the BMW Group for any changes/additions to the technical data.

Information status: **June 2015**
BV-72/Technical Training

G12 Displays and Controls

Content

1. Introduction **1**
- 1.1. Overview 1
- 1.2. Controls in Center Console 2
- 1.3. Radio control panel 3
- 1.4. Touch operation 4

2. Instrument Cluster **5**
- 2.1. Introduction 5
- 2.2. Dynamic digital instrument cluster 5
  - 2.2.1. Display 5
  - 2.2.2. Driving modes 6
  - 2.2.3. Displays 7
- 2.3. Features 8
  - 2.3.1. Settings 8
  - 2.3.2. Day/night-time mode 10
  - 2.3.3. APIX 10
  - 2.3.4. Selection lists 11
  - 2.3.5. Test functions (Service mode) 11

3. Head-Up Display **13**
- 3.1. Introduction 13
- 3.2. Displays 14
  - 3.2.1. Settings 14
  - 3.2.2. Information 15
  - 3.2.3. System wiring diagram 17
  - 3.2.4. Service 18

4. Controller **19**
- 4.1. Overview 19
  - 4.1.1. Touch operation 20
- 4.2. Operation 21
  - 4.2.1. Favorites 21
  - 4.2.2. MAP 22
  - 4.2.3. Service Menu 22

5. Central Information Display **23**
- 5.1. Displays 23
  - 5.1.1. Main menu 23
  - 5.1.2. My Vehicle 24
  - 5.1.3. Personalize menu 24
  - 5.1.4. Split screen 25

G12 Displays and Controls
Content

5.1.5. Preview ... 26
5.1.6. Screensaver ... 27
5.1.7. Profiles ... 27
5.2. Touch operation ... 28
5.2.1. Detection ... 28
5.2.2. Main menu ... 29

6. Gesture Control ... 30
6.1. Camera ... 30
6.1.1. Overview ... 30
6.1.2. Function ... 31
6.1.3. Detection range ... 33
6.2. Operation ... 34
6.2.1. Settings ... 34
6.2.2. Possible gestures ... 35
6.2.3. System wiring diagram ... 37
6.2.4. Limits of the system ... 38

7. Multifunction Steering Wheel ... 39
7.1. Variants ... 39
7.1.1. Assistance systems ... 39
7.1.2. Multimedia ... 40

8. BMW Touch Command ... 41
8.1. Overview ... 41
8.2. Connection ... 41
8.3. Operation ... 42
8.3.1. Seats ... 42
8.3.2. Climate comfort ... 44
8.3.3. Interior lighting ... 45
8.3.4. Sun protection ... 47
8.3.5. Media/Radio ... 47
8.3.6. Rear compartment telephone ... 48
8.3.7. Driving info ... 48
8.3.8. Settings ... 49
8.3.9. Apps ... 49
8.3.10. Rear Seat Entertainment control ... 50
8.4. Snap-in adapter ... 51
8.4.1. Charging ... 51
8.5. Service ... 52

G12 Displays and Controls

Content

9. Driving Experience Switch **53**
9.1. Overview 53
9.2. Modes 53
9.3. COMFORT 55
9.3.1. STANDARD 55
9.3.2. PLUS 56
9.4. SPORT 56
9.4.1. STANDARD 56
9.4.2. INDIVIDUAL 57
9.5. ECO PRO 57
9.5.1. STANDARD 57
9.5.2. INDIVIDUAL 58
9.6. ADAPTIVE 58
9.6.1. Overview 59
9.6.2. Function 60
9.6.3. System wiring diagram 61

10. Intelligent Safety Button **63**
10.1. Overview 63
10.2. Settings 63
10.3. Displays 64

11. Remote Key **65**
11.1. Overview 65
11.2. Emergency detection 65
11.3. Display key 66
11.3.1. Operation 66
11.3.2. Function 67
11.3.3. Charging the battery 71

12. Service History **73**

13. Owner's Manual **74**
13.1. Integrated Owner's Manual 74
13.2. Internet 75
13.3. BMW Driver’s Guide 76

G12 Displays and Controls

1. Introduction

1.1. Overview

The typical BMW display and operating concept is also used in the new BMW 7 Series G12. The main features of iDrive were kept, such as separation of displays and controls as well as separation of the driving functions immediately in front of the driver and the convenience functions integrated in the center of the vehicle.

Greater emphasis of driver orientation is achieved by the driver-facing center stack as well as the arrangement of the driver assistance functions on the steering wheel. In addition, the Multifunction Steering Wheel (MFL) provides the driver with fast access to the most important communication and entertainment functions.

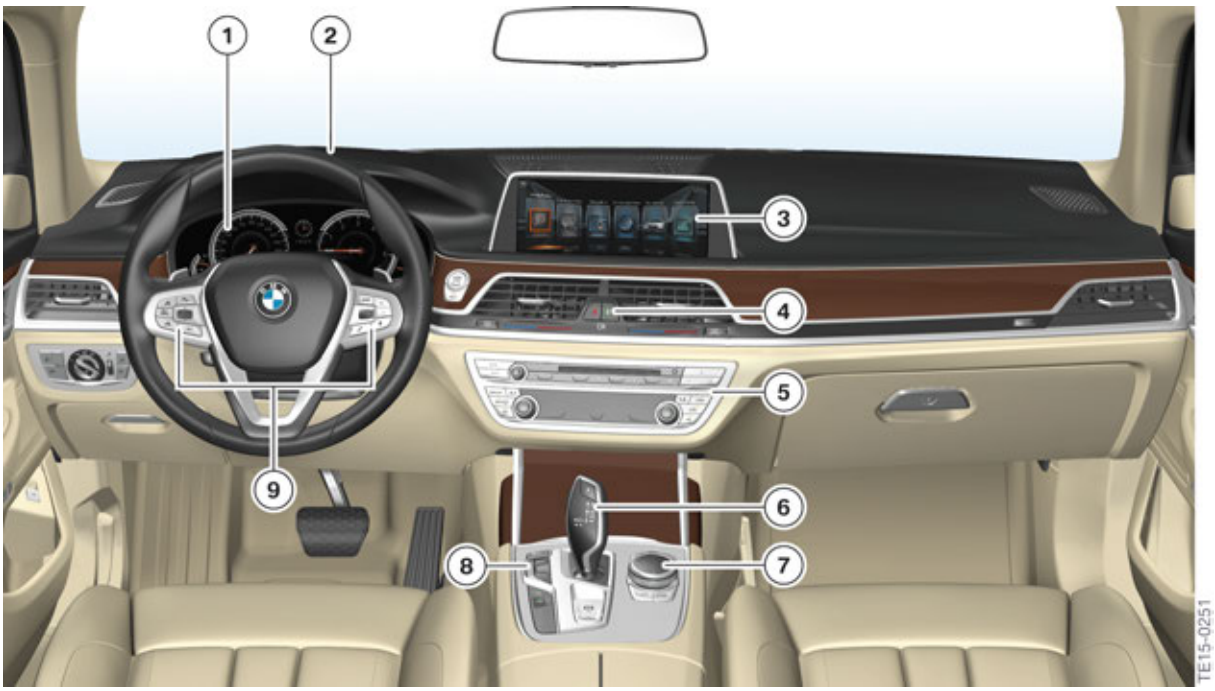

G12 Overview of driving cockpit

Index	Explanation
1	Instrument Panel
2	Head-Up Display (HUD)
3	Central Information Display (CID)
4	Intelligent Safety Button
5	Heating/Air Conditioning/Radio Control Panel
6	Gear Selector
7	Controller
8	Driving Experience Switch
9	Multifunction Steering Wheel

During the design process, extra attention was given to ensure a clear and optimum structuring of the driver's cockpit. In addition, the vehicle interior was equipped with additional, innovative controls.

G12 Displays and Controls

1. Introduction

With the model launch of the G12, the Central Information Display (CID) has evolved with it's touch-screen operating function. There are also additional functions that are controlled by touch operation, such as the heating and air conditioning control.

For the first time, function applications are now also performed by the use of gesture control (SA 6U8).

Another completely new method of function control in the G12 is the BMW Touch Command (SA 6U9). The removable tablet PC (BMW Touch Command) replaces the rear compartment controller of the F01/F02.

1.2. Controls in Center Console

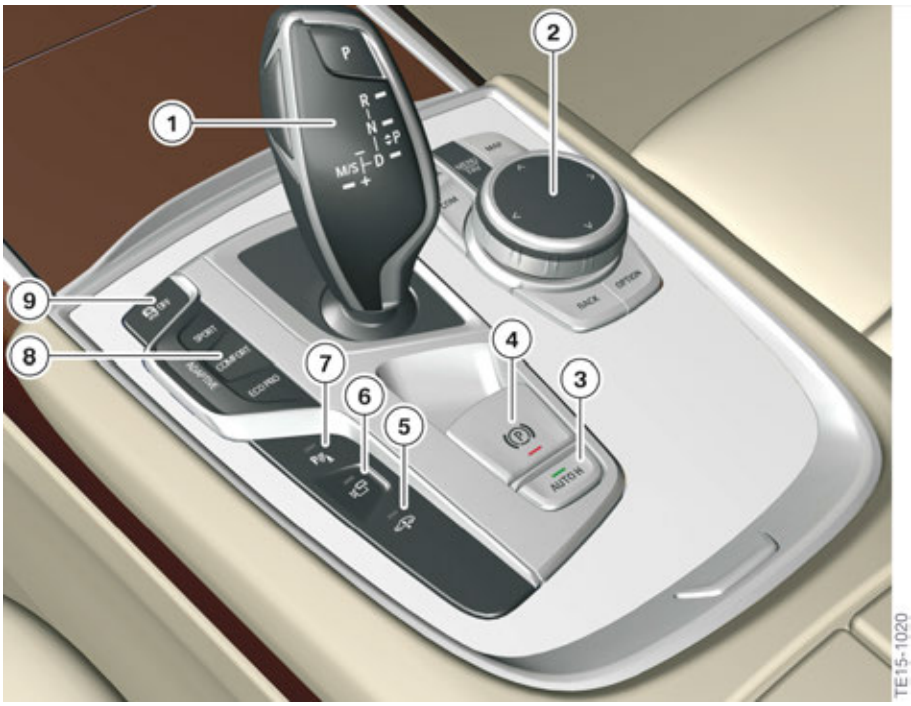

G12 Controls in the center console

Index	Explanation
1	Gear Selector
2	Controller
3	Automatic hold
4	Electromechanical Parking Brake
5	Two-axle ride level control
6	Surround view
7	Park Distance Control
8	Driving experience switch
9	Dynamic Stability Control

G12 Displays and Controls

1. Introduction

1.3. Radio control panel

In the new BMW 7 Series, the favorite buttons have been re-assigned with the introduction of a newly designed radio control panel. Of the 8 favorite buttons in the BMW 7 Series, ConnectedDrive access is now pre-assigned to one button. The assignment of the favorite buttons can be cleared by simultaneously pressing buttons 1 and 8 (ConnectedDrive button).

G12 Radio control unit

Index	Explanation
1	Change entertainment source
2	Traffic reports
3	ON/OFF, Volume
4	Favorite buttons
5	ConnectedDrive
6	CD/DVD eject button
7	Change station/track

Further information on the controls for the heating/air conditioning control panel is provided in the technical training manual “ST1501 G12 Climate Control”.

G12 Displays and Controls

1. Introduction

1.4. Touch operation

The following graphic provides an overview of the functions and applications that can be controlled by touch operation in the new BMW 7 Series.

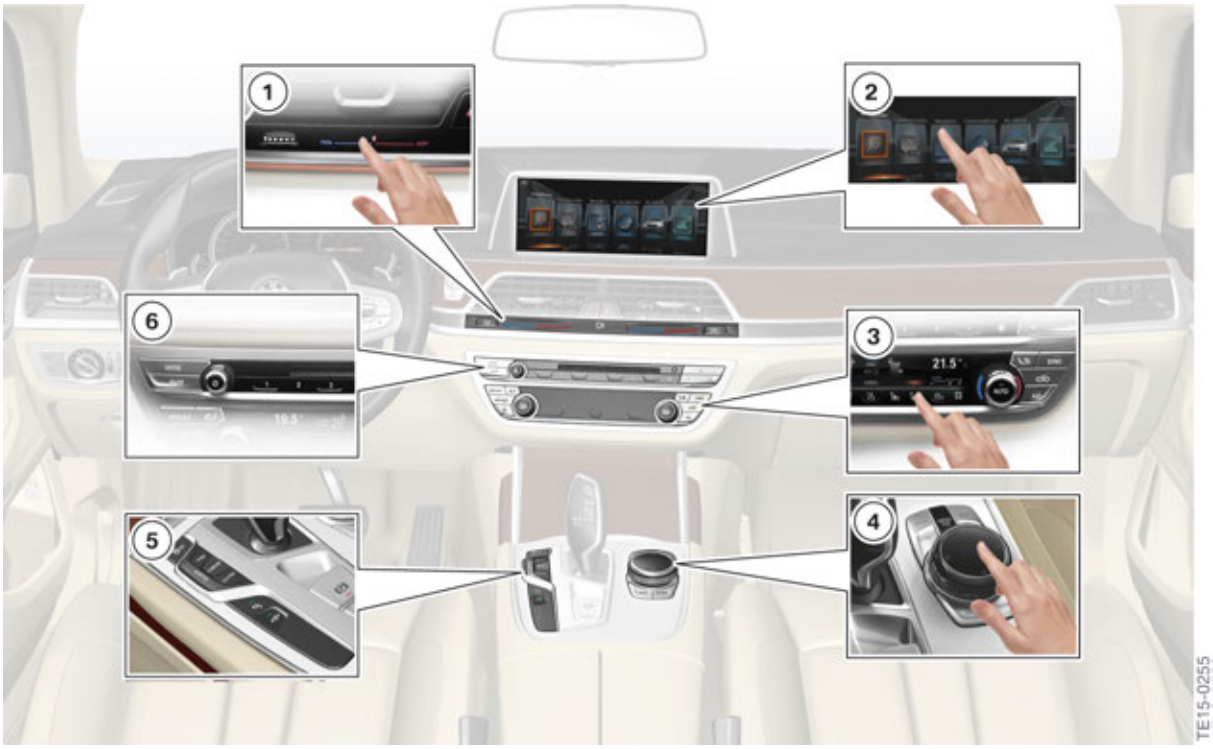

G12 Overview of driving cockpit, touch operation

Index	Explanation
1	Stratification control panel for the Heating/Air Conditioning system
2	Central Information Display (CID) with touch operation
3	Heating/Air Conditioning control panel
4	Controller with touch control panel
5	Buttons in the Center Console
6	Favorite buttons on the radio control panel

G12 Displays and Controls

2. Instrument Cluster

2.1. Introduction

The BMW 7 Series is fitted with a dynamic digital instrument cluster (SA 6WB).

The dynamic digital instrument cluster is equipped with a TFT display and therefore allows for situation-dependent display of information that is relevant to the driver. This flexible display of information achieves a maximum degree of clarity and comfort as well as the following:

- Minimization of driver distraction by optimum arrangement of related functions and situation-based displays.
- Improvement of the driving experience by the display hierarchy and design adapted to the driving situation.
- Improved driving comfort through the display of new indicators and functions (e.g. picture-in-picture map display on the instrument cluster).

2.2. Dynamic digital instrument cluster

The dynamic digital instrument cluster is offered as standard equipment in the G12.

2.2.1. Display

The dynamic digital instrument display has a 12.3" TFT display with a resolution of 1920 x 720 pixels and covers an extended area of the instrument cluster. This means that is also possible to display the fuel and temperature gauges and the needles by means of the TFT display in addition to the speed reading and engine speed display.

G12 TFT display in the dynamic digital instrument cluster

G12 Displays and Controls

2. Instrument Cluster

2.2.2. Driving modes

The 3 driving modes are also visually distinguished on the dynamic digital instrument cluster.

G12 Driving modes of the dynamic digital instrument display

G12 Displays and Controls

2. Instrument Cluster

Index	Explanation
1	COMFORT mode
2	SPORT mode
3	ECO PRO mode

2.2.3. Displays

The indicator/warning lights are shown both as graphic indicators on the display and fixed chamber lights.

For example, the turn indicators and fog lamp indicator are shown on the TFT display. Every light indicator located outside the TFT display is a fixed chamber light, like the engine malfunction and parking brake indicators.

BMW 7 Series dynamic digital instrument display indicator/warning lights

Index	Explanation
1	Side light/driving light
2	Anti-lock Brake System (ABS)
3	Hazard warning light
4	Seat belt warning, rear passenger compartment
5	Seat belt warning
6	Lane departure warning
7	Airbag system
8	Turn signal indicator light and hazard warning light, left
9	Fog light
10	High-beam assistant

Index	Explanation
11	High-beam headlight
12	Fog light
13	Turn signal indicator light and hazard warning light, right
14	Steering system
15	Automatic Hold
16	Hazard warning light
17	Parking brake
18	Dynamic Stability Control deactivated/Dynamic Traction Control activated
19	Brake system
20	Dynamic Stability Control
21	Tire pressure control
22	Engine malfunction

2.3. Features

2.3.1. Settings

The instrument cluster can be individually adapted by the driver by means of the controller.

Various options are available for this purpose:

- STANDARD
- REDUCED
- INDIVIDUAL

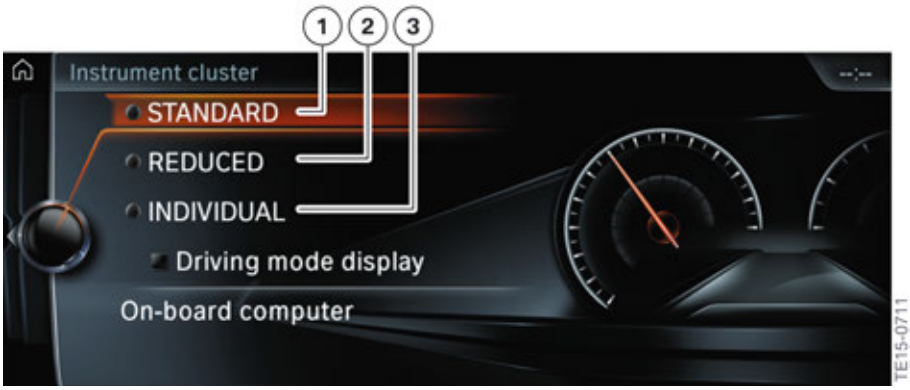

G12 Settings on the dynamic digital instrument display

G12 Displays and Controls

2. Instrument Cluster

Index	Explanation
1	STANDARD
2	REDUCED
3	INDIVIDUAL

STANDARD

All displays on the instrument cluster are active.

G12 dynamic digital instrument display STANDARD

REDUCED

The displays of the instrument cluster are reduced to the essential information.

G12 dynamic digital instrument display REDUCED

INDIVIDUAL

All displays on the instrument cluster are active. Individual displays can be configured.

G12 Displays and Controls

2. Instrument Cluster

The following displays can be configured in INDIVIDUAL mode:

- Driving mode display
- Road sign recognition
- Magnifier function

2.3.2. Day/night-time mode

The instrument cluster feature automatic changeover of day/night mode.

The instrument cluster switches to night mode only when the photosensor in the instrument cluster and the rain/light sensor detect darkness and the low-beam headlights are active.

G12 dynamic digital instrument display night design

2.3.3. APIX

The instrument cluster is connected with to the Head Unit High 2 (HU-H2) via an APIX connection.

G12 APIX connection

Index	Explanation
1	Head unit
2	Instrument panel (KOMBI)

G12 Displays and Controls

2. Instrument Cluster

2.3.4. Selection lists

Instead of the engine speed/tachometer display, it is possible to briefly display selection lists in the instrument cluster.

The following selection lists are possible:

- Navigation directions
- Audio/media
- Telephone
- Voice input

G12 Navigation display in the instrument cluster

2.3.5. Test functions (Service mode)

The instrument cluster in the BMW 7 Series also incorporates the known test functions as we had before. These test functions are used by BMW Service to check encoding and to read out specific vehicle values. The service mode is accessed in the same way as for other instrument clusters.

Start test functions:

- Switch on terminal 15 (press start/stop button 3 times within 0.8 s).
- Press and hold the setting button in the instrument cluster for 10 s.

G12 Displays and Controls

2. Instrument Cluster

Overview

An overview of the test functions of the G12 is provided in the following table:

Test functions	Description
01	Identification
02	System test
03	Roller test
04	Unlock test functions
05	Fuel gauge values
06	Coolant temperature, ambient temperature
07	On-board computer average values
08	Correction factor, consumption figures

G12 Displays and Controls

3. Head-Up Display

3.1. Introduction

G12 Head-Up Display

The full-color Head-Up Display, offered as optional equipment (SA 610) in the 740i and standard equipment in the 750i/xi G12, has a 70% larger display size than the predecessor model F01/F02. The larger display provides the platform for a new display and operating concept of the HUD. There are now new features and high-quality graphics.

G12 Displays and Controls

3. Head-Up Display

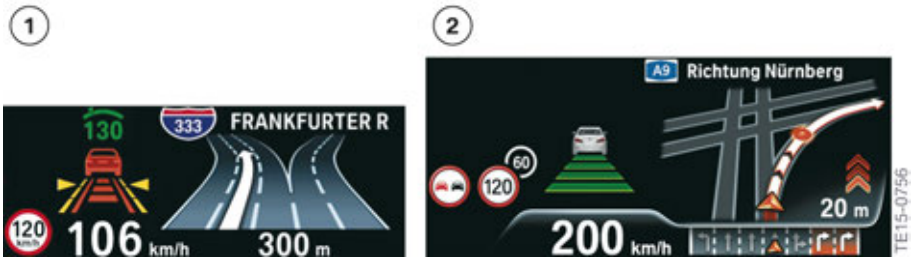

G12 HUD display size comparison

Index	Explanation
1	Projected image in F-series
2	Projected image in G12

The virtual image is visible at a distance of around 2.4 m (7.8 ft) from the eye of the viewer.

Activation and operation of the new HUD is similar to the predecessor.

The Head-Up Display is connected to the instrument cluster via an APIX interface.

The brightness of the Head-Up Display adapts itself to the ambient brightness. This is controlled based on the data from the rain-light-solar-condensation sensor (RLSBS). The characteristic curve (image brightness in relation to the input signal from the rain-light-solar-condensation sensor) can be changed by means of the controller. In addition, the brightness in night mode can also be changed manually.

The image position and image rotation can be adjusted by means of the controller, as before.

3.2. Displays

3.2.1. Settings

The display content of the Head-Up Display can be individually adjusted.
The following settings are possible:

- STANDARD
- REDUCED
- INDIVIDUAL

G12 Displays and Controls

3. Head-Up Display

G12 Head-Up Display settings

STANDARD

All displays of the Head-Up Display are active.

REDUCED

The displays of the Head-Up Display are reduced to the essential content.

INDIVIDUAL

All displays of the Head-Up Display are active. Individual displays can be configured.

The following displays can be configured in INDIVIDUAL mode:

- Entertainment/Telephone
- Navigation information
- Check Control messages
- Speed limit exceeded

3.2.2. Information

G12 Head-Up Display content

The various content displayed in the Head-Up Display (SA 610) is aimed at increasing road safety and ride comfort.

G12 Displays and Controls

3. Head-Up Display

This includes the following displays:

- Welcome screen
- Assistance systems
  - Active Cruise Control Stop&Go
  - Warning if speed limit is exceeded
  - Dynamic Cruise Control
  - Traffic Jam Assistant
  - Road sign recognition
  - Proactive driving assistant
  - Speed Limit Assist
  - Night vision
  - Pedestrian warning
  - Tailgate warning
- Check Control messages
- Navigation
  - Extended turn information (animation)
  - Navigation warnings
- Lists
  - Entertainment
  - Communication
  - Voice processing system
- Driving modes
- Showroom mode

G12 Displays and Controls

3. Head-Up Display

G12 Head-Up Display Check Control message

G12 Head-Up Display SPORT mode

3.2.3. System wiring diagram

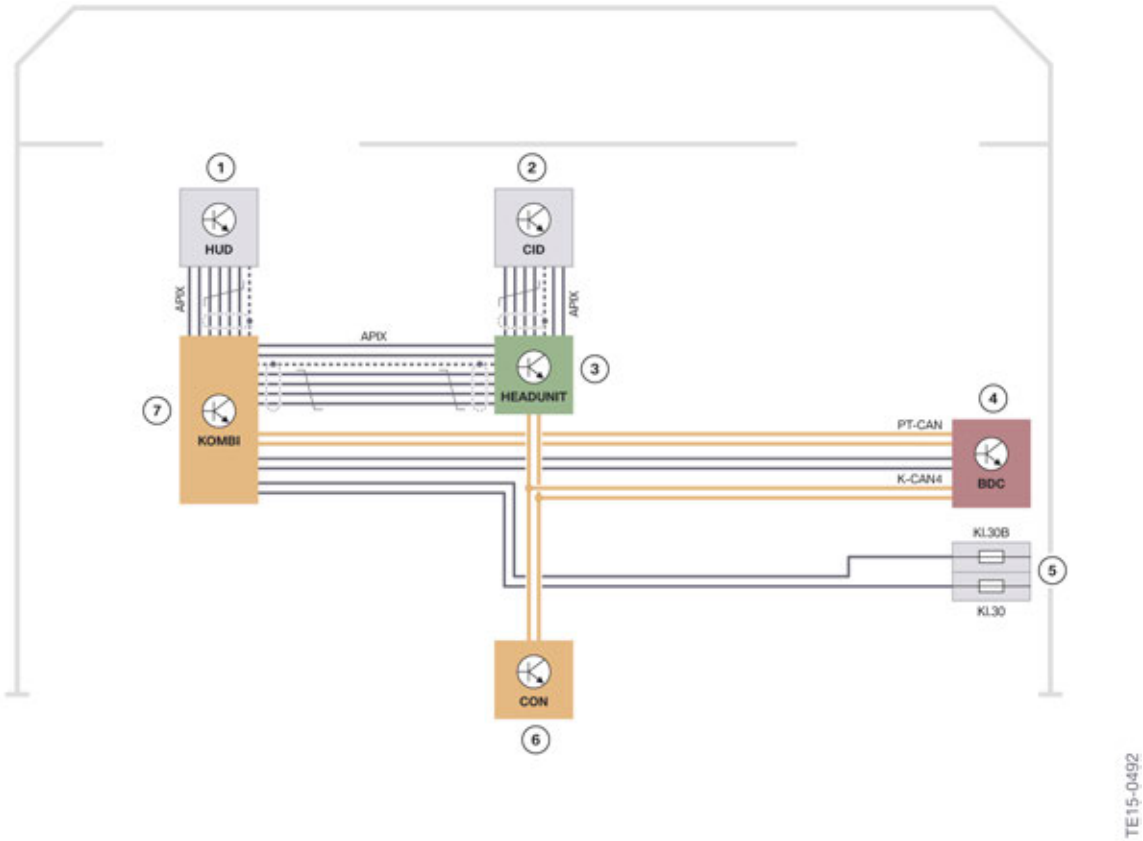

G12 system wiring diagram of Head-Up Display

Index	Explanation
1	Head-Up Display (HUD)
2	Central Information Display (CID)
3	Head unit
4	Body Domain Controller (BDC)
5	Fuses
6	Controller (CON)
7	Instrument panel (KOMBI)

3.2.4. Service

Vehicle

The following settings can be made on the Head-Up Display in the vehicle by means of the controller:

- Head-Up Display ON/OFF
- Configuration of display content
- Height adjustment
- Display brightness
- Rotation adjustment

Showroom Mode

This mode demonstrates the HUD features to potential customers on the showroom floor and also allows a technician to perform a system test, similar to instrument cluster system test. Please note that this mode only operates with the vehicle's hood closed.

There are two methods of activating the HUD showroom mode:

- Once the Service Menu is activated, via the controller (see next "Controller" section), a new additional menu item named "Start demo" appears in the Head-Up Display menu. When "Start demo" is activated, all the displays/features in the HUD will activate.
- Access the Head-Up Display settings menu in the CID. With the check mark "on" to activate the HUD and still having it highlighted, press the Controller down 6 times (5 times if the HUD was not checked "on" originally) and the showroom mode will activate.

Service

Service can correct the picture geometry with the BMW workshop ISTA.

G12 Displays and Controls

4. Controller

4.1. Overview

G12 Controller

The Controller (CON) is still the main control input for the BMW 7 Series. The controller has 7 direct access buttons as well as a touch control panel. Assignment of some direct access keys in the BMW 7 Series has been changed or is new. The following table shows the changes:

Controller up to G12 (F-series)	Controller in G12
RADIO and MEDIA	MEDIA
TEL	COM
NAV	NAV and MAP
Menu	Menu

The functions RADIO and MEDIA are now combined in one MEDIA button. In contrast, the NAV button has now been split into a MAP button and a NAV button.

A double-press on the MENU button opens a favorites list on the Central Information Display containing the last-selected menus.

G12 Displays and Controls

4. Controller

G12 Controller

4.1.1. Touch operation

The Touchbox (TBX) control unit has been omitted in the BMW 7 Series. The detection of character input via the touch control panel now takes place in the head unit.

G12 Head Unit High 2

G12 Displays and Controls

4. Controller

4.2. Operation

The following table provides an overview of the direct access button functions:

Button	Function
Menu	Press once: • Main menu Press twice: • Favorites
COM	Communication
MEDIA	Media/Radio
NAV	Destination input menu
MAP	Navigation map
BACK	Previous screen
Option	Option menu

4.2.1. Favorites

The Favorites function is intended to provide the user easier access and operation of the last-selected menus. In order to call up the Favorites function, the MENU button on the controller must be pressed twice (double click). A maximum of the last 20 selected menus are displayed.

G12 Favorites

4.2.2. MAP

The navigation map is opened up directly when the MAP button on the controller is pressed.
The navigation main menu, e.g. for destination input, is still called up via the NAV button.

G12 Navigation map

4.2.3. Service Menu

When in the service menu, it is possible to check important information details in the event of a customer complaint or a malfunction.

The service menu is also important for the BMW Service centers due to the Gracenote® data updates.
In the BMW 7 Series, the service menu is accessed as follows:

You have to be in the main menu.

- Push controller forwards for at least 10 seconds
- Move controller 3 detents to the right
- Move controller 3 detents to the left
- Move controller 1 detent to the right
- Move controller 1 detent to the left
- Move controller 1 detent to the right
- Press controller once

Service menu is now added as the last submenu in the menu "My Vehicle".

There are 4 selection menus available in the service mode:

- Navigation
- Telephone and BMW Service
- TV
- Gracenote®

G12 Displays and Controls

5. Central Information Display

The 12.3" Central Information Display (CID) in the G12 features touch screen operation as standard equipment and is thus an operating controller alongside the Controller. The CID has a resolution of 1440 x 540 pixels.

5.1. Displays

5.1.1. Main menu

The user interface of the BMW 7 Series has a new design. The items are no longer arranged in a list but are now shown as graphic tiles. Among other things, this facilitates selection by touch operation.

G12 Main menu in Central Information Display

The main menu contains the following selections:

- Media/Radio
- Communication
- Navigation
- ConnectedDrive
- My Vehicle
- Notifications

The following table compares the main menu of a G12 with the main menu from the F Series vehicle. This is intended to show you what functions and applications are available in the individual menus of the new BMW 7 Series:

Menu structure in G12	Menu structure in F Series
Media/Radio	• Multimedia • Radio
Communication	• Telephone • Office
Navigation	• Navigation

Menu structure in G12	Menu structure in F Series
ConnectedDrive	• ConnectedDrive
My Vehicle	• Vehicle info • Settings
Notifications	• Office • Vehicle info

5.1.2. My Vehicle

The "My Vehicle" menu combines the previous menus "Vehicle info" and "Settings" and is divided up into the 2 large submenus “Vehicle settings” and “System settings”.

5.1.3. Personalize menu

The customer can configure some of the menus due to the large number of new functions and applications. This submenu "Personalize menu" allows lists to be personalized to that the customer has a better overview. This allows the customer to configure his radio list, for example, so that no AM stations are offered for selection. The settings can be cancelled again at any time.

The following menus have this “Personalize” feature:

- Media/Radio
- Communication
- ConnectedDrive

G12 Displays and Controls

5. Central Information Display

5.1.4. Split screen

It is still possible to display a split screen in the CID. Selection of the content is made easier for the user by having a graphic preview. There is new navigation content available for the split screen. Further information about this is provided in the technical training manual “ST1501 G12 Navigation systems”.

G12 Split screen in the Central Information Display

G12 Displays and Controls

5. Central Information Display

5.1.5. Preview

In most menus, a preview of the settings and applications in the currently selected menu is displayed on the right-hand side of the screen. This makes navigation in the menus easier for the user due to reduced selection of incorrect menus.

The bottom graphic shows the language selection by way of example. On the right side it is immediately possible to see which languages are available for selection.

G12 CID display preview

Index	Explanation
1	Language selection
2	Preview of the possible languages

5.1.6. Screensaver

A screensaver can be activated in the BMW 7 Series. This is activated only when no menus are open, i.e. the main menu must be currently displayed.

The time until the screensaver is displayed can be set individually to 30, 60 or 120 seconds or the screensaver can be switched off completely.

G12 Screensaver

The content of the screensaver cannot be changed.

5.1.7. Profiles

If a name is assigned to the personal profile, this entered name will be shown as a personal welcome as an animation on the Central Information Display when the customer enters and starts the vehicle.

G12 Welcome display

5.2. Touch operation

Touch operation of the CID is included as standard equipment in the BMW 7 Series.

The displays of the Rear Seat Entertainment are **not** equipped with touch operation. The optional equipment Rear Seat Entertainment is controlled either via a remote control or via the BMW Touch Command (SA 6U9).

5.2.1. Detection

To allow easier operation of the touch control function, the graphic symbols in the main menu increase in size when a hand/finger is moved closer to the symbol. The list entries of the individual menus are also specially highlighted to facilitate operation.

Infrared sensors are installed on the left and right of the CID housing for detection of an approaching hand.

G12 CID including infrared LEDs

Keypad letters

The input changed from the previous circular input of the controller to a keypad for input of letters, e.g. for destination input.

G12 Displays and Controls

5. Central Information Display

G12 Display for CID touch input

Telephone keypad

A keypad is also displayed when a hand approaches the CID for input of digits, e.g. a phone number.

G12 Telephone touch input

The touch control panel must be touched only with fingers and not with objects.

5.2.2. Main menu

It is possible to return to the main menu by means of the house symbol in the top left corner. This is equivalent to the MENU button of the controller. The Favorites view is opened if the button is pressed twice.

G12 Main menu for touch operation

G12 Displays and Controls

6. Gesture Control

For the first time, there is function controllability by the use of gesture control (SA 6U8) in the G12.

Individual functions, such as input of the home address in route guidance, can be carried out conveniently by means of a directed movement between the gear selector switch and instrument panel.

6.1. Camera

The gesture recognition camera is a Time of Flight (TOF) camera which is integrated in the roof function center (FZD).

Roof function center (FZD) with gesture recognition camera

Index	Explanation
1	Gesture recognition camera

6.1.1. Overview

TOF cameras have an extremely high level of detection sensitivity and are therefore highly suitable for gesture recognition and control.

A TOF camera operates with similar principles as of a radar or echo sounder, which sends out signals and is then able to detect their reflections in the surrounding area. With this kind of camera, light wavefronts are transmitted into space and the time required for the light to return at this point is measured for each sensor pixel. This time measurement is performed based on the "Time of Flight" principle.

Pulse modulation is used for the gesture recognition of the G12. With pulse modulation, a short light pulse is emitted and a time measurement is started simultaneously.

G12 Displays and Controls

6. Gesture Control

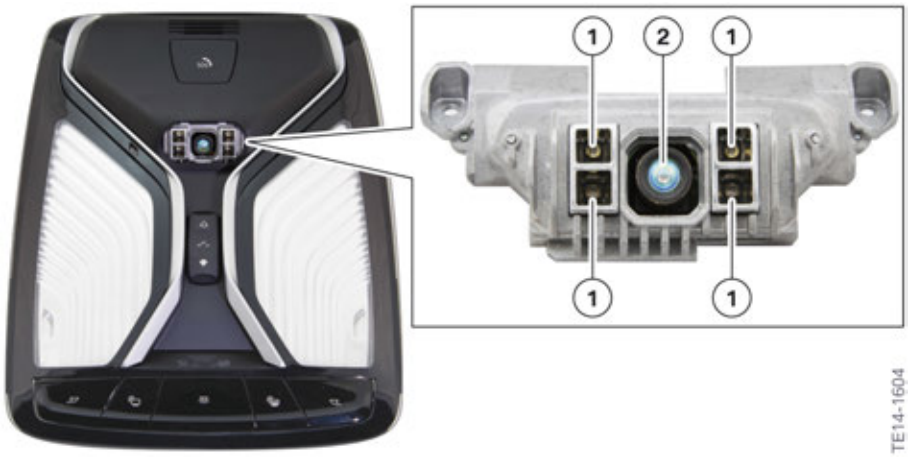

G12 Gesture recognition camera

Index	Explanation
1	Infrared LEDs
2	Camera

6.1.2. Function

Four (4) infrared LEDs (like those in a TV remote control) illuminate the gesture interaction space in a pulsed mode. The gesture recognition camera “sees” the reflected light in the illuminated area and calculates the distance by measuring the time-of-flight of the light signal between the camera and the reflecting object. This technique is used to generate the 3D image which is required for gesture recognition.

G12 Displays and Controls

6. Gesture Control

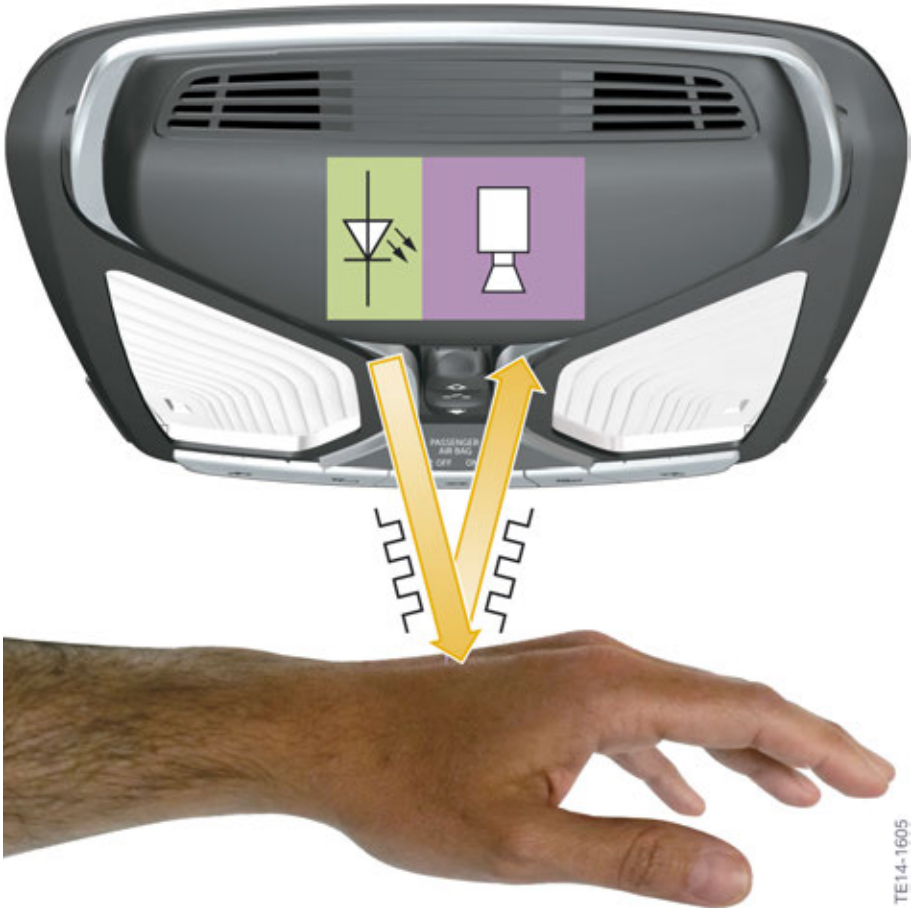

G12 Function of gesture recognition camera

The following graphic shows an image which has been recorded by the gesture recognition camera. It is clear to see that a hand is performing a gesture.

G12 View from the gesture recognition camera

6.1.3. Detection range

The detection range of the gesture recognition camera extends from part of the steering wheel to part of the glove box.

G12 Detection range of the gesture recognition camera

Do not look directly into the infrared LEDs from a short distance (< 7 cm/2.75 in).
This can damage the eyes.

6.2. Operation

The gesture control can be switched on or off and can also be personalized by means of the controller.

G12 Settings for gesture control

6.2.1. Settings

Setting	Explanation
"Display tips"	The possible gesture is shown on the control display.
"Audio feedback"	An acoustic signal is output when a gesture is detected.

6.2.2. Possible gestures

The gestures selection was restricted in order to guarantee reliable gesture detection and thus good customer acceptance.

Gesture	Operation	Function
	Move index finger to and fro in direction of control display CID screen.	• Accept telephone call • Confirm Check Control message
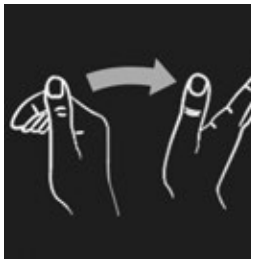	Move hand over the width of the control display CID in the direction of the passenger's side.	• Reject telephone call • Close pop-up
	Move hand slowly in circular clockwise movement with index finger extended forward. Gesture is recognized after approximately one circular movement.	• Increase volume

G12 Displays and Controls

6. Gesture Control

Gesture	Operation	Function
	Move hand slowly in circular counter-clockwise movement with index finger extended forward. Gesture is recognized after approximately one circular movement.	• Reduce volume
	Grip thumb and index finger together and move hand horizontally right or left.	• Surround View: Rotate camera view
	Extend index and middle fingers forward.	• Individually assignable gesture

The following functions can be assigned to the individually assignable gesture:

- Guidance to home address
- Mute/Unmute
- Last used menus
- Next track/station
- Recent calls
- Notifications
- Turn off control display

6.2.3. System wiring diagram

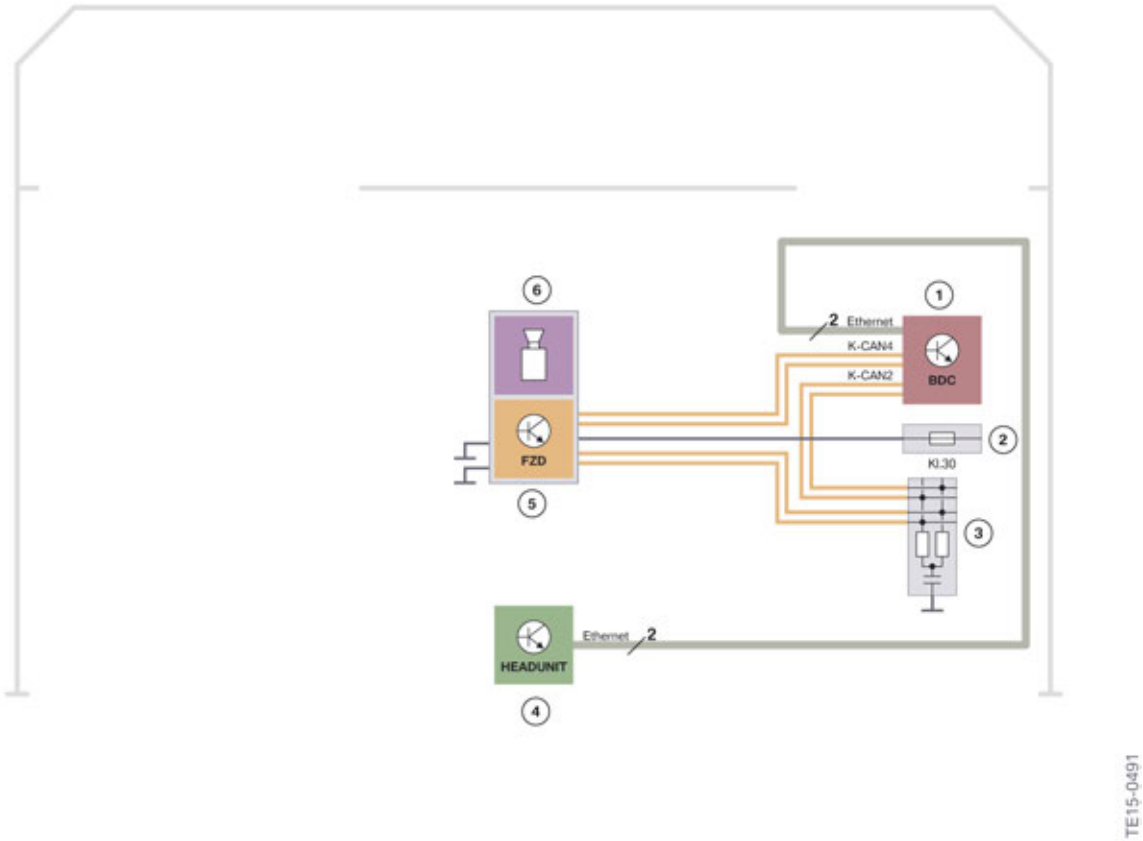

G12 System wiring diagram of gesture recognition camera

Index	Explanation
1	Body Domain Controller (BDC)
2	Fuse
3	CAN terminator
4	HEADUNIT
5	Roof function center (FZD)
6	Gesture recognition camera

The detected gestures are sent by the roof function center (FZD) to the BDC. This forwards the data to the head unit via an Open Alliance BroadR-Reach (OABR) Ethernet connection, which is only 2 wires.

6.2.4. Limits of the system

There may be problems with gesture recognition in certain circumstances.
Several examples of this are shown below:

- The camera lens is covered
- The camera lens is dirty
- The gesture is performed outside the detection range
- Wearing gloves or jewelry
- Smoking inside the vehicle

G12 Displays and Controls

7. Multifunction Steering Wheel

In the BMW 7 Series, many functions can still be controlled via the multifunction steering wheel buttons. The arrangement on the steering wheel itself remains unchanged. Some of the assistance systems are operated on the left side of the steering wheel and the multimedia functions on the right.

7.1. Variants

7.1.1. Assistance systems

Depending on equipment, the BMW 7 Series is fitted with different button configurations on the multifunction steering wheel. These are shown to you in the following table:

Equipment	Multifunction buttons
Standard equipment • Dynamic Cruise Control	
Driving Assistant Plus (SA 5AT) • ACC Stop&Go • Steering and lane control assistant	

G12 Displays and Controls

7. Multifunction Steering Wheel

7.1.2. Multimedia

The following graphic provides an overview of the buttons for multimedia applications on the multifunction steering wheel.

G12 Multimedia on multifunction steering wheel

Index	Explanation
1	Entertainment source
2	Increase volume
3	Reduce volume
4	Voice processing system
5	Telephone
6	Knurled wheel for selection lists

G12 Displays and Controls

8. BMW Touch Command

8.1. Overview

The new function controller BMW Touch Command (SA 6U9) is used for the first time in the G12. The removable tablet PC does not just replace the rear compartment controller, but also includes a host of new functions, which area divided up into the 3 main menus "Comfort", "RSE Remote" and "Web + App applications".

The BMW Touch Command is based on a 7" Samsung® tablet, which runs on an Android® operating system.

G12 BMW Touch Command in the rear passenger compartment

8.2. Connection

The BMW Touch Command is connected to the head unit via the vehicle Wi-Fi® (Wi-Fi Direct®). The head unit functions as a gateway for the commands transmitted by the BMW Touch Command.

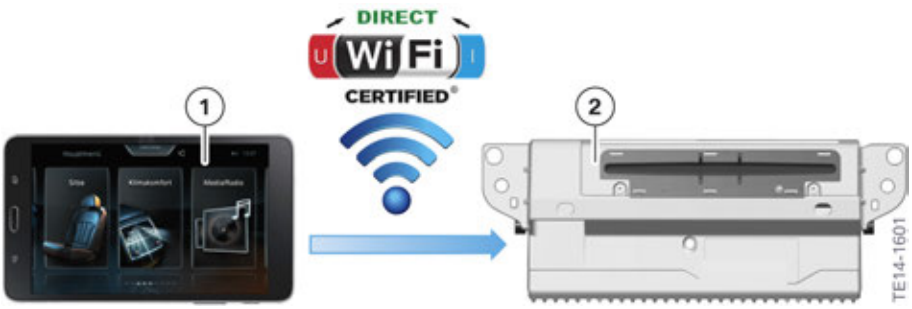

G12 Connection of BMW Touch Command via Wi-Fi Direct®

Index	Explanation
1	BMW Touch Command
2	Head unit

Further information on the Wi-Fi connection between the BMW Touch Command and the head unit is provided in the technical training manual “ST1501 G12 Information and Communication".

8.3. Operation

In the BMW 7 Series, the BMW Touch Command features a user interface which has been adapted to the BMW applications for greater ease of use. The user has a conventional tablet available which is equipped with an Android™ operating system. In order to use it as such, the user must exit the BMW interface by means of the "App" application.

8.3.1. Seats

Seat adjustment

The seat adjustment function allows adjustment of the rear seats as well as the Captain's Chair, available as optional equipment (included in the optional equipment “Executive Lounge Seating” (SA 7GZ)).

G12 BMW Touch Command seats

- Backrest adjustment
- Head restraint height adjustment
- Footrest angle
- Sleeping position
- Lumbar support
- Reset
- Memory function for rear passenger compartment and front passenger seat
- Rear monitor adjustment

G12 Displays and Controls
8. BMW Touch Command

Seat massage

G12 Massage using BMW Touch Command

- Hip activation
- Upper body activation
- Whole body activation
- Back massage
- Shoulder massage
- Lumbar massage
- Upper body training
- Whole body training

BMW Vitality Program

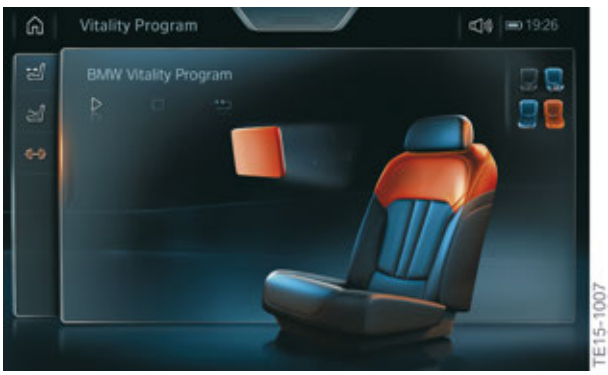

G12 BMW Touch Command BMW Vitality Programme

- BMW Vitality Program

8.3.2. Climate comfort

Rear climate

G12 BMW Touch Command heating and air conditioning system

- Heating and air conditioning system in rear passenger compartment
- Seat heating, including armrests
- Seat heating distribution
- Seat ventilation

Fragrance

G12 BMW Touch Command fragrance

- Fragrance
- Fragrance selection
- Intensity

Ionization

G12 BMW Touch Command ionization

- Switching ionization on/off

8.3.3. Interior lighting

Interior lighting

G12 BMW Touch Command interior lighting

- Switching lighting on/off
- Brightness
- Color

G12 Displays and Controls
8. BMW Touch Command

Rear accent lighting (light saber)

This menu controls the light saber, which is located in the B-pillar.

G12 BMW Touch Command rear accent lighting

- Switching accent lighting on/off
- Brightness

Bowers & Wilkins

G12 BMW Touch Command Bowers & Wilkins

- Switching lighting on/off
- Brightness

8.3.4. Sun protection

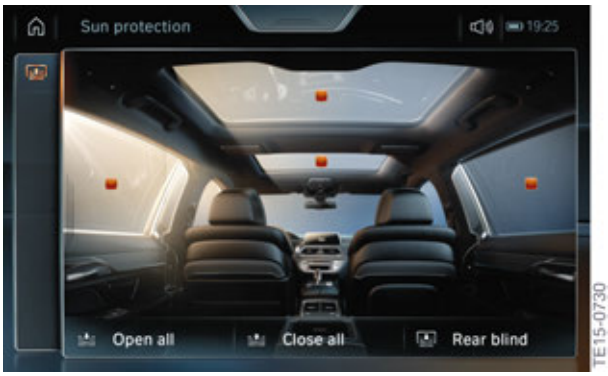

G12 BMW Touch Command sun protection

- Window blinds
- Rear window blind
- Panorama glass roof blind

8.3.5. Media/Radio

G12 BMW Touch Command Entertainment

The following functions can be controlled in the Media/Radio menu:

- Radio
- CD/DVD/Blu-ray
- Bluetooth audio streaming
- AUX In
- USB
- Music collection
- Tone settings
- TV

8.3.6. Rear compartment telephone

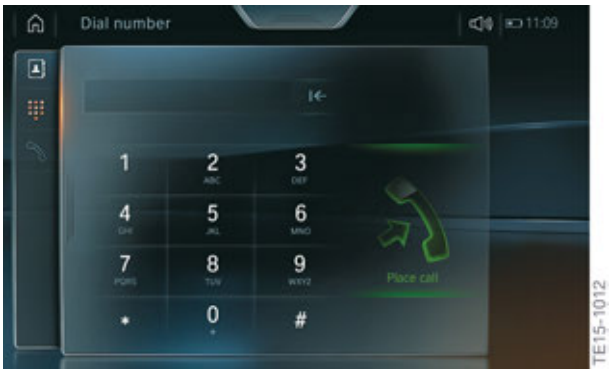

G12 BMW Touch Command telephone

- Rear compartment telephone contacts
- Start/end call
- Dial number

8.3.7. Driving info

G12 BMW Touch Command navigation

- Arrival time
- Fuel consumption
- Range
- Compass

8.3.8. Settings

G12 BMW Touch Command settings

The following settings can be made via this menu on the BMW Touch Command.

- Display
- Sound
- Display tips
- Information on device
- Reset

8.3.9. Apps

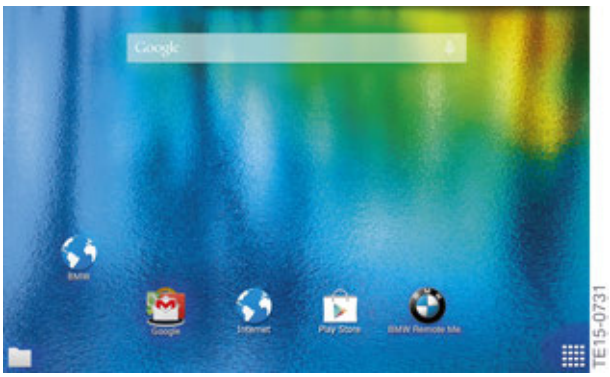

G12 BMW Touch Command Apps

The BMW-specific application is exited with the menu item “Apps”. The BMW Touch Command can then be used like a normal tablet.

The BMW user interface is called up by pressing the "Home" button.

Further information on the BMW Touch Command and on the update process is provided in the technical training manual “ ST1501 G12 Information and Communication”.

8.3.10. Rear Seat Entertainment control

The Rear Seat Entertainment (RSE) is controlled using the BMW Touch Command. In order to start the operation function, it is necessary to pull down the additional window (see graphics below).

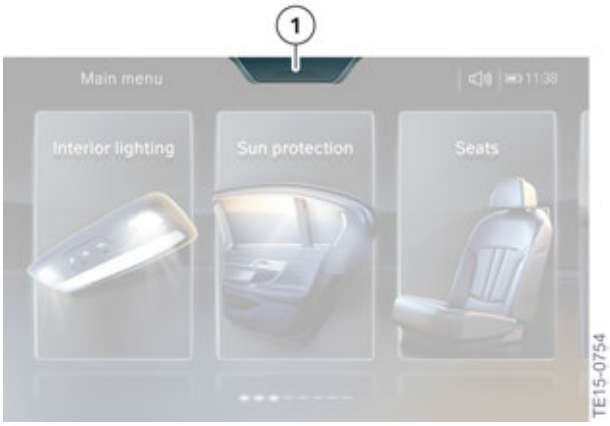

G12 RSE control

Index	Explanation
1	Additional window for controlling the Rear Seat Entertainment (RSE)

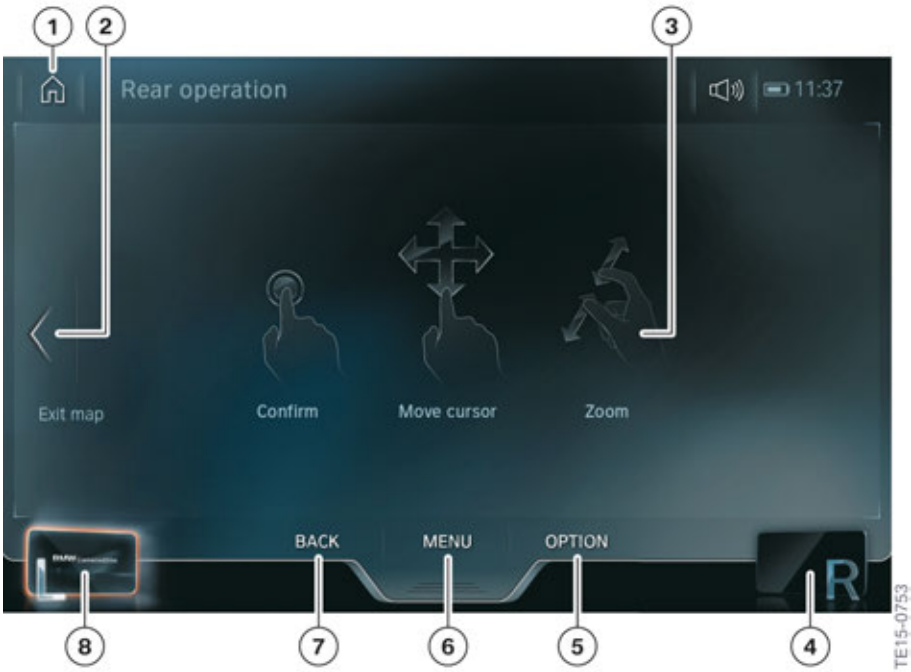

G12 RSE control via BMW Touch Command

Index	Explanation
1	Main menu
2	Exit
3	Touch operation area
4	Right rear compartment display
5	Options
6	Menu
7	Back
8	Left rear compartment display

8.4. Snap-in adapter

The snap-in adapter holds the BMW Touch Command in position. For this purpose, there is a drive in the snap-in adapter which opens and closes the two retaining claws. The BMW Touch Command is also charged via the snap-in adapter.

There are 3 hall effect sensors in the snap-in adapter that detect whether or not the BMW Touch Command is inserted in the correct position and with the display facing up. For this purpose, a shell with 3 magnets is secured onto the rear of the BMW Touch Command.

If the snap-in adapter is replaced, the installation position of the BMW Touch Command must be taught in with the BMW workshop ISTA.

8.4.1. Charging

If the BMW Touch Command is not inserted correctly, the LED on the release button will flash. It will be automatically locked into position, but will not be charged.

The snap-in adapter is controlled by the Light Effect Manager (LEM) via a LIN-bus. The LEM functions include:

- Release and locking
- Lighting
- Charging conditions

The BMW Touch Command is charged under the following conditions:

- Charging takes place continuously in the vehicle condition - Driving.
- In the vehicle condition status - Residing, charging takes place as soon as the battery state of charge falls below 20% (engine off, vehicle not locked and remote key not in the vehicle).
- The BMW Touch Command is not charged in the vehicle condition - Parking.

G12 Displays and Controls
8. BMW Touch Command

8.5. Service

Release and charging of the BMW Touch Command is deactivated in transport mode.

When a vehicle is locked (Parking status), the release button does not function for reasons of theft protection. The same applies when the vehicle is open and there is no remote key in the vehicle.

If the BMW Touch Command can no longer be removed from the snap-in adapter due to a technical fault, an emergency release function is available.

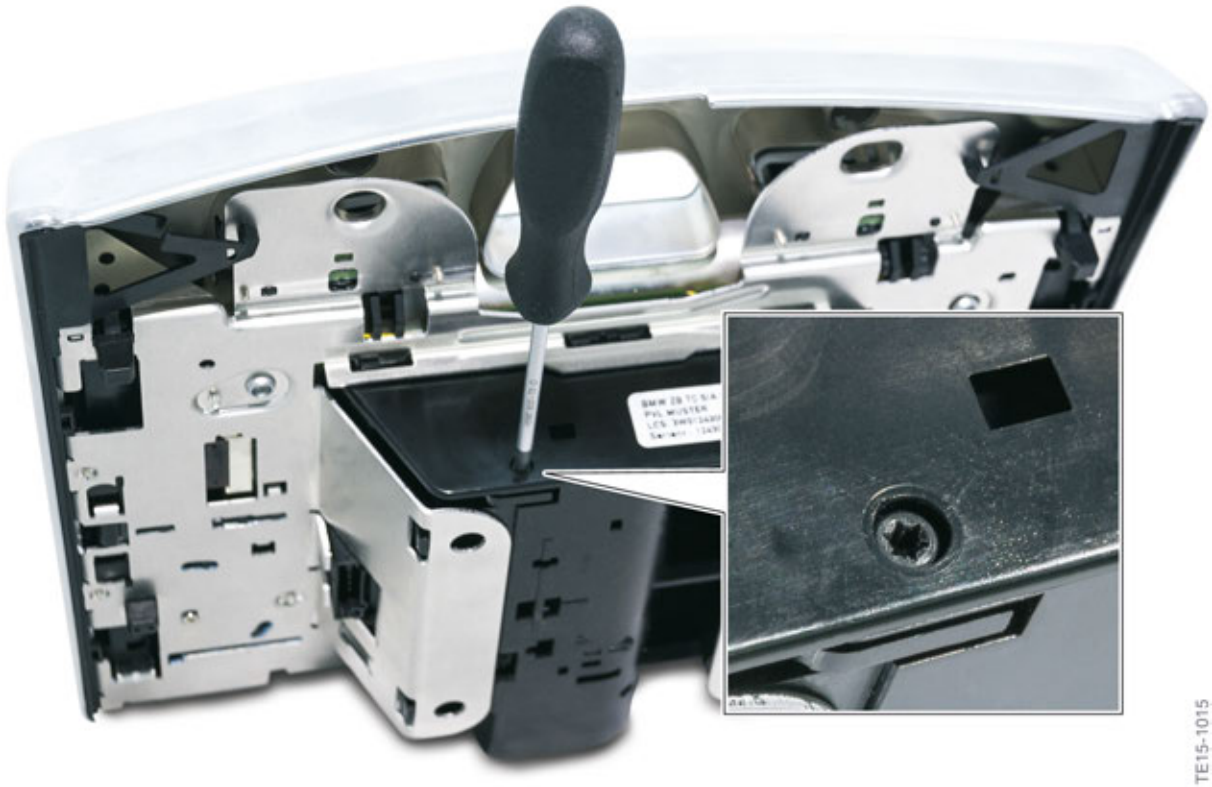

G12 Emergency release of BMW Touch Command

For further information, refer to the repair instructions in the BMW workshop ISTA.

G12 Displays and Controls

9. Driving Experience Switch

The driving experience switch allows the driver to influence the driving characteristics of the vehicle without having to know exactly what systems are involved. The different modes affect the entire vehicle and permit a large number of settings depending on the vehicle equipment.

9.1. Overview

An overview of the systems that are influenced is provided below:

- Engine
- Automatic transmission
- Dynamic Damper Control
- Air suspension
- Dynamic Drive
- Integral Active Steering
- Display in the instrument cluster
- Cruise control

9.2. Modes

The modes are divided up into the main modes (driving modes) and the corresponding sub-modes (configuration menus), which offer the driver additional adjustment options.

G12 Displays and Controls

9. Driving Experience Switch

G12 Main and sub modes

Index	Explanation
1	Driving experience switch
2	STANDARD
3	COMFORT PLUS
4	INDIVIDUAL
5	ADAPTIVE

The driver can use the driving experience switch to directly select different driving modes which alter various properties of the vehicle depending on the vehicle's equipment specification.

G12 Displays and Controls

9. Driving Experience Switch

In addition to the already familiar main modes (driving modes) “COMFORT“, “SPORT“ and “ECO PRO“ mode, the BMW 7 Series now also has an “ADAPTIVE“ mode.

The driving modes currently selected by the driver are displayed in the instrument cluster.

G12 driving experience switch

9.3. COMFORT

The “COMFORT“ mode is a comfort-oriented setup and offers a harmonious combination of dynamic and fuel-efficient driving. The vehicle is always in "COMFORT" mode after driving readiness has been established.

9.3.1. STANDARD

The STANDARD setting comprises the factory settings or basic settings.

G12 COMFORT

9.3.2. PLUS

In the sub-mode (configuration menu), the customer has the possibility of influencing ride comfort, among other things.

“COMFORT PLUS“ mode is a comfortable setup that ensures optimum journey comfort. The setting parameters are fixed values. For this reason, further personalization is not possible for "COMFORT PLUS" mode.

In "COMFORT PLUS" mode, the engine and automatic transmission are switched to very comfortable characteristics and damper control to a soft setup. Driving off takes place in 2nd gear in this setting.

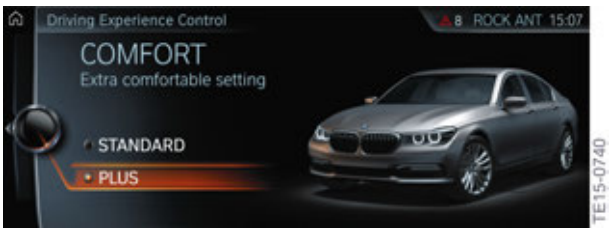

G12 COMFORT PLUS

9.4. SPORT

"SPORT" mode can be experienced in the vehicle through a large number of different functions and properly adapted features. The chassis and drive are connected directly with reduced comfort, thereby increasing the vehicle response to driver input.

The drive and chassis components are set to a sporty setup. The self-levelling suspension of the 2-axle air suspension also allows the vehicle body to be lowered by 10 mm.

In addition to the driving dynamics, the assistance systems, such as cruise control, are also switched to a sporty setting.

The sporty experience is further enhanced by visual means, with a sporty representation in the Central Information Display (CID) and in the instrument cluster.

The Active Sound Design (ASD) further emphasizes the sportier driving experience.

9.4.1. STANDARD

The STANDARD setting comprises the factory settings or basic settings.

G12 SPORT STANDARD

9.4.2. INDIVIDUAL

The sub-mode (configuration menu) allows the customer to configure or personalize various functions according to his/hers personal taste.

The list below shows which systems can be influenced:

- Damping
- Steering
- Engine
- Transmission

G12 SPORT INDIVIDUAL

9.5. ECO PRO

The "ECO PRO" mode supports the driver in adopting an optimized-consumption driving style and reduces fuel consumption through intelligent control of energy and A/C management.

Among other things, the accelerator pedal characteristic and the shift program of the automatic transmission are changed in order to permit a fuel-efficient driving style.

In addition to the corresponding setup of the drive train, the driver is provided with additional assistance in the form of ECO PRO functions like the proactive driving assistant and idle coasting for a fuel-efficient driving style, as well as additional display features.

9.5.1. STANDARD

The STANDARD setting comprised of the factory settings or basic settings.

G12 ECO PRO Standard

9.5.2. INDIVIDUAL

The sub-mode (configuration menu) allows the customer to configure or personalize various functions according to his personal taste.

The list below shows which systems can be influenced:

ECO PRO information:

- ECO PRO tips
- ECO PRO limit

ECO PRO functions:

- Coasting
- ECO PRO climate control
- ECO PRO light and sight
- Proactive driving assistant

Driving dynamics:

- Damping
- Steering

G12 ECO PRO INDIVIDUAL

9.6. ADAPTIVE

G12 ADAPTIVE mode

9.6.1. Overview

The "ADAPTIVE" mode is used for the first time in the BMW 7 Series. It is designed to achieve a balanced driving mode where the setup is automatically adapted to both the driving situation and the driving style.

In this mode, the parameters of the Electronic Damper Control (VDP), the Electric Active Roll Stabilization (EARS), Electronic Power Steering (EPS) and the automatic transmission, for example, are switched between "COMFORT", "SPORT" and “ECO PRO” settings depending on the driving situation. However, when "ADAPTIVE" mode is active, no changes that restrict comfort (seat heating, A/C settings, etc.) are made in the event of switching to "ECO PRO" mode.

"ADAPTIVE" reacts to the current driving style. The affected control units can change their parameters on the basis of the detected driving style.

With the navigation system, the mode makes use of the available map data and optimizes "ADAPTIVE" mode by predictive functions such as early reaction to bends, junctions and road type.

The displays on the instrument cluster and Central Information Display (CID) remain in "normal" mode and do not continuously change between "COMFORT" and "SPORT" modes. This is to prevent the driver from being distracted or lose comfort by changes in the displays. "ADAPTIVE" mode changes the modes in the background so that the driver does not notice the changes directly.

The following influences on the driving style are taken into account, among others:

- Longitudinal dynamics
- Current speed
- Pedal sensor position
- Cruise control (sensor data from ACC radar sensor)
- Sport shift gate for automatic transmission
- Turn indicator
- Steering wheel movements
- Navigation data

9.6.2. Function

If a driving mode is changed by means of the driving experience switch, this data is sent from the Body Domain Controller (BDC) to the responsible control units. The parameter changes in "ADAPTIVE" mode are sent by the Dynamic Stability Control (DSC) to the responsible control units.

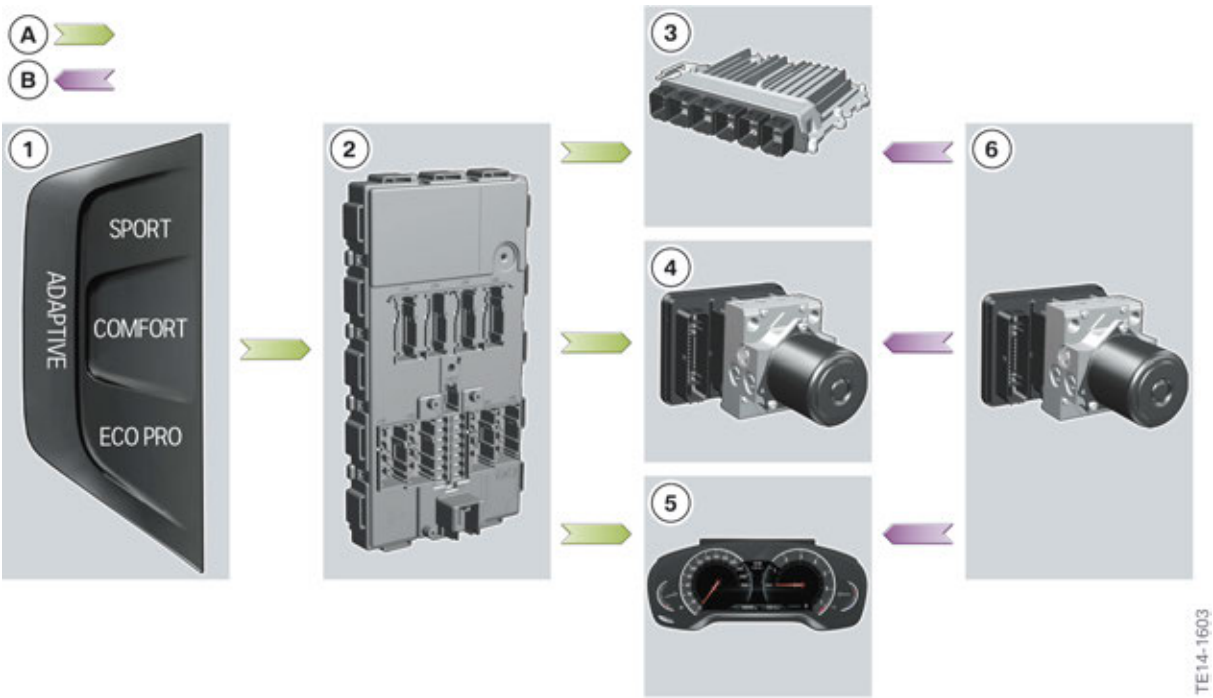

Input and output components for Adaptive mode

Index	Explanation
A	Setting via driving experience switch
B	Setting via "ADAPTIVE" mode
1	Driving experience switch
2	Body Domain Controller (BDC)
3	Digital Motor Electronics (DME), drive functions
4	Dynamic Stability Control (DSC), input signals of the adaptive logic
5	Instrument cluster (KOMBI), display functions
6	Dynamic Stability Control (DSC), driving dynamics functions

If the navigation system detects a town, a mixture of the "COMFORT PLUS" and "ECO PRO" modes is activated in order to support a comfortable and fuel-efficient driving style.

The acoustics are correspondingly changed by the Active Sound Design (ASD).

G12 Displays and Controls

9. Driving Experience Switch

9.6.3. System wiring diagram

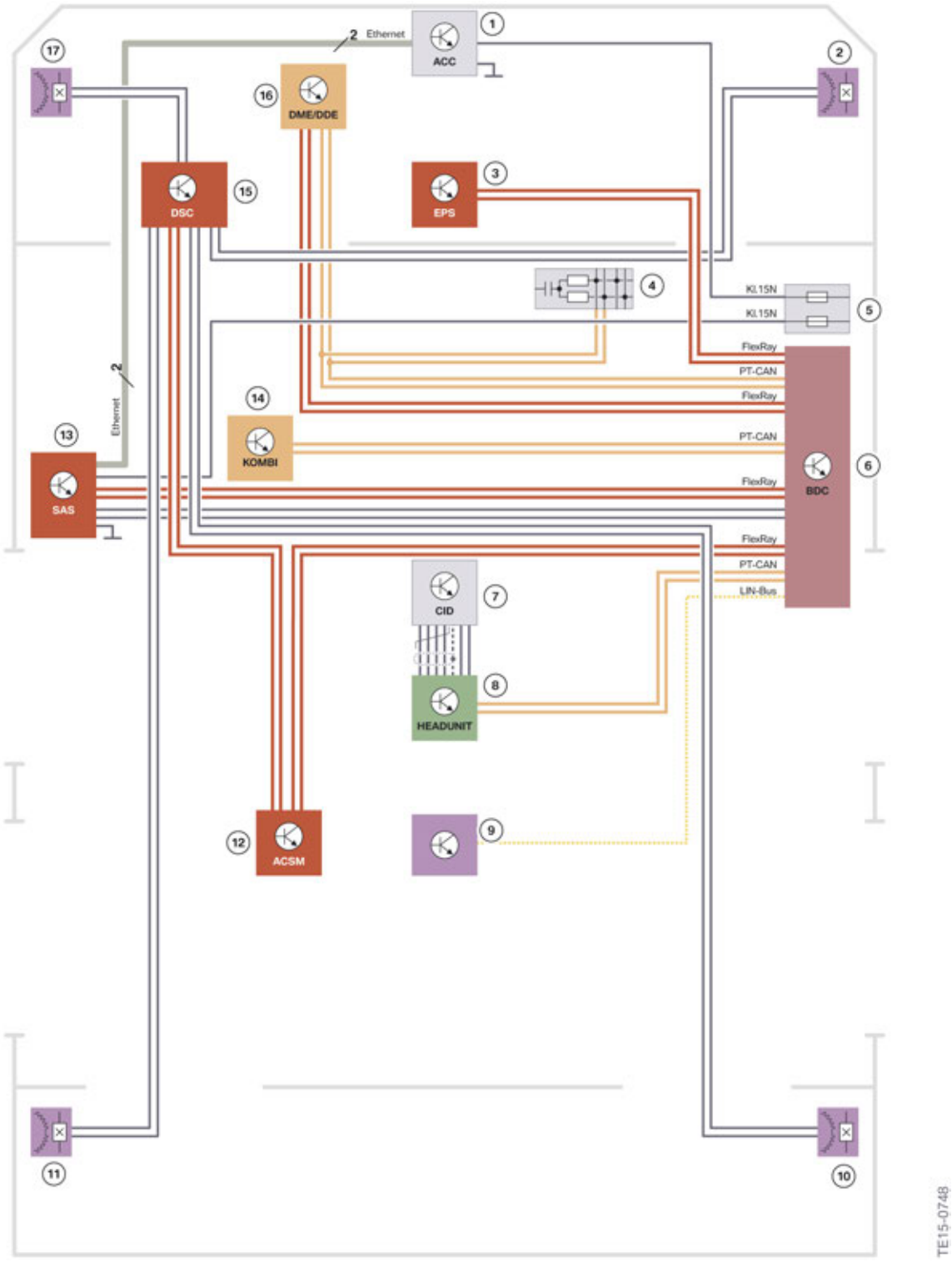

G12 System wiring diagram of driving experience switch

G12 Displays and Controls

9. Driving Experience Switch

Index	Explanation
1	Active Cruise Control (ACC)
2	Wheel-speed sensor, front right
3	Electronic Power Steering (EPS)
4	CAN terminator
5	Fuses in the power distribution box, front right
6	Body Domain Controller (BDC)
7	Central Information Display (CID)
8	Head unit
9	Driving experience switch
10	Wheel speed sensor, rear right
11	Wheel speed sensor, rear left
12	Advanced Crash Safety Module (ACSM)
13	Optional equipment system (SAS)
14	Instrument panel (KOMBI)
15	Dynamic Stability Control (DSC)
16	Digital Motor Electronics (DME)
17	Wheel-speed sensor, front left

G12 Displays and Controls

10. Intelligent Safety Button

10.1. Overview

The Intelligent Safety button permits central operation of certain assistance systems.
The systems can be switched on or off and can be personalized.

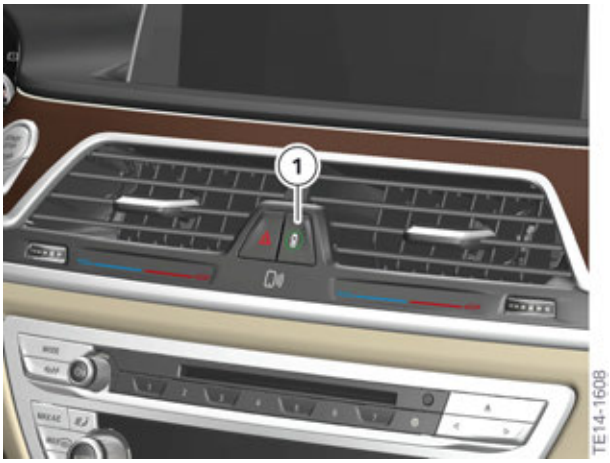

G12 Intelligent Safety button

Index	Explanation
1	Intelligent Safety button

10.2. Settings

The following assistance systems can be operated by means of the Intelligent Safety button:

- Collision warning with braking function
- Pedestrian warning with city braking function
- Night Vision with person and animal recognition
- Lane departure warning
- Blind spot detection
- Side collision warning

G12 Displays and Controls

10. Intelligent Safety Button

10.3. Displays

G12 Intelligent Safety button displays

Index	Explanation
A	All Intelligent Safety systems are switched on
B	Some Intelligent Safety systems are switched off or sub-function settings have been changed
C	All Intelligent Safety systems are switched off

G12 Displays and Controls

11. Remote Key

11.1. Overview

The G12 is supplied with 2 remote keys as the standard equipment configuration.

Each remote key has a replaceable battery. Depending on the vehicle equipment the customer can configure various functions for each remote key.

A Display key (SA 3DS) is available as optional equipment.

11.2. Emergency detection

If there are transmission problems between the transponder of the remote key and the vehicle where it is not possible to establish driving readiness, an "emergency detection function" is available. The customer is informed about the fact that the remote key has not been detected by means of a Check Control message.

If a corresponding Check Control message is displayed, the remote key must be held against the marking on the steering column. The start/stop button must then be pressed immediately after this (within a time of around 10 s) with the brake pedal depressed.

Emergency detection of the remote key

This function allows driving readiness to be established if the battery of the remote key is exhausted, for example.

The emergency detection function is possible both for the remote key and for the Display key.

The transponder of the Display key is located on the rear side at around the level of the lock button (BMW badge).

G12 Displays and Controls

11. Remote Key

11.3. Display key

The Display key (SA 3DS) offered as optional equipment in the G12 replaces a standard remote key.

The Display key combines the remote key, the ID transmitter, and a touch display in one key.

The display is a 2.2" LCD color display with a resolution of 320 x 240 pixels.
The display is operated by means of swipe and touch gestures.

11.3.1. Operation

Display key

Index	Explanation
1	Open tailgate
2	Unlocking
3	Locking
4	Panic button
5	Display
6	Back
7	Switch display on/off
8	Micro USB charging port

Instead of a standard remote key, the delivery specification of the BMW Display key includes an additional mechanical key. The mechanical key should be carried as well if the Display key is used.

11.3.2. Function

The Display key supports all functions of the standard remote key, but does not have an integrated mechanical key.

The key also permits status information on various functions to be accessed. The customer has the possibility of obtaining information on his vehicle, e.g. the range.

Certain settings of the vehicle are adopted by the Display key, e.g. date and time format, language or units. Up to 27 languages can be displayed on the Display key.

In the key, the menus are divided up into 4 main menus. These are in turn divided into further submenus.

Security information

G12 Security display

Index	Explanation
1	Main menu for vehicle and window status
2	Submenu; status of windows, doors, tailgate, alarm system

G12 Displays and Controls

11. Remote Key

Climate settings

G12 Climate display

Index	Explanation
1	Climate control status
2	Climate control setting or immediate activation
3	Set time

G12 Displays and Controls

11. Remote Key

Vehicle information

G12 Service display

Index	Explanation
1	Main menu for vehicle information
2	Submenu; Service requirements or lighting status

G12 Displays and Controls

11. Remote Key

Range information

G12 Range display (range status)

Range

All key functions are available in a radius of approximately 50 m around the vehicle. The further away the key is from the vehicle, the fewer functions that are available. The following table illustrates this in more detail:

Functions	Close reception range	Extended reception range	Outside the reception range
Buttons on the key	Yes	No	No
Climate settings	Yes	Yes	Last status
Security information	Yes	Yes	Last status
Range	Yes	Yes	Last status
Vehicle information	Yes	Yes	Last status

11.3.3. Charging the battery

Unlike the standard remote key, the Display key has a rechargeable battery.

The display is automatically switched off if the state of charge of the Display battery (SA 3DS) falls to a low level. The operability of the standard buttons is maintained until the battery is fully discharged.

The display can be completely switched off in order to prolong the battery life. To do this, press the On/Off button on the side for longer than 4 s.

The battery of the Display key (SA 3DS) can be charged as follows:

- Place the Display key (SA 3DS) in the recess of the Wireless charging tray (WCA) with the locking button at the top.
- Connect the Display key (SA 3DS) to a USB port (charging connection) via the Micro USB port on the left side of the key.

Please note, that if the Display key is completely discharged, the wireless charging tray will not be able to recognize the Display key and charging will not take place. It would be necessary to first have a surface charge via the Micro USB before placing the Display key in the wireless charging tray for charging.

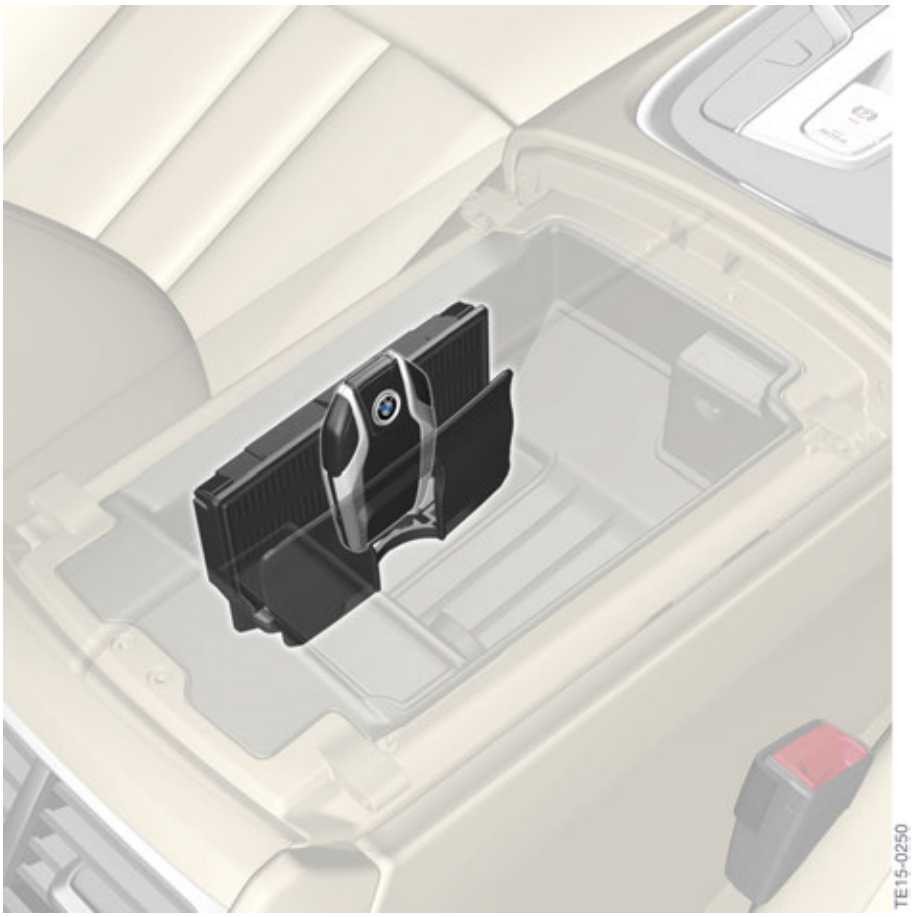

G12 Wireless charging tray

G12 Displays and Controls

11. Remote Key

Smartphones can also be charged in the wireless charging tray. However, there must be only one device for charging in the wireless charging tray.

Displays of the wireless charging tray

The state of charge or faults are displayed by an LED on the wireless charging tray. The following table shows the various displays of the wireless charging tray:

Color	Explanation
Blue	Device is being charged
Orange	Device is not being charged
Red	Error

G12 Displays and Controls

12. Service History

As already known by most models of the BMW Group, the BMW 7 Series will no longer be provided with a Service Booklet in paper form.

In addition, the BMW 7 Series also offers the possibility of transferring the data to the vehicle by means of TeleServices, like in the previous models.

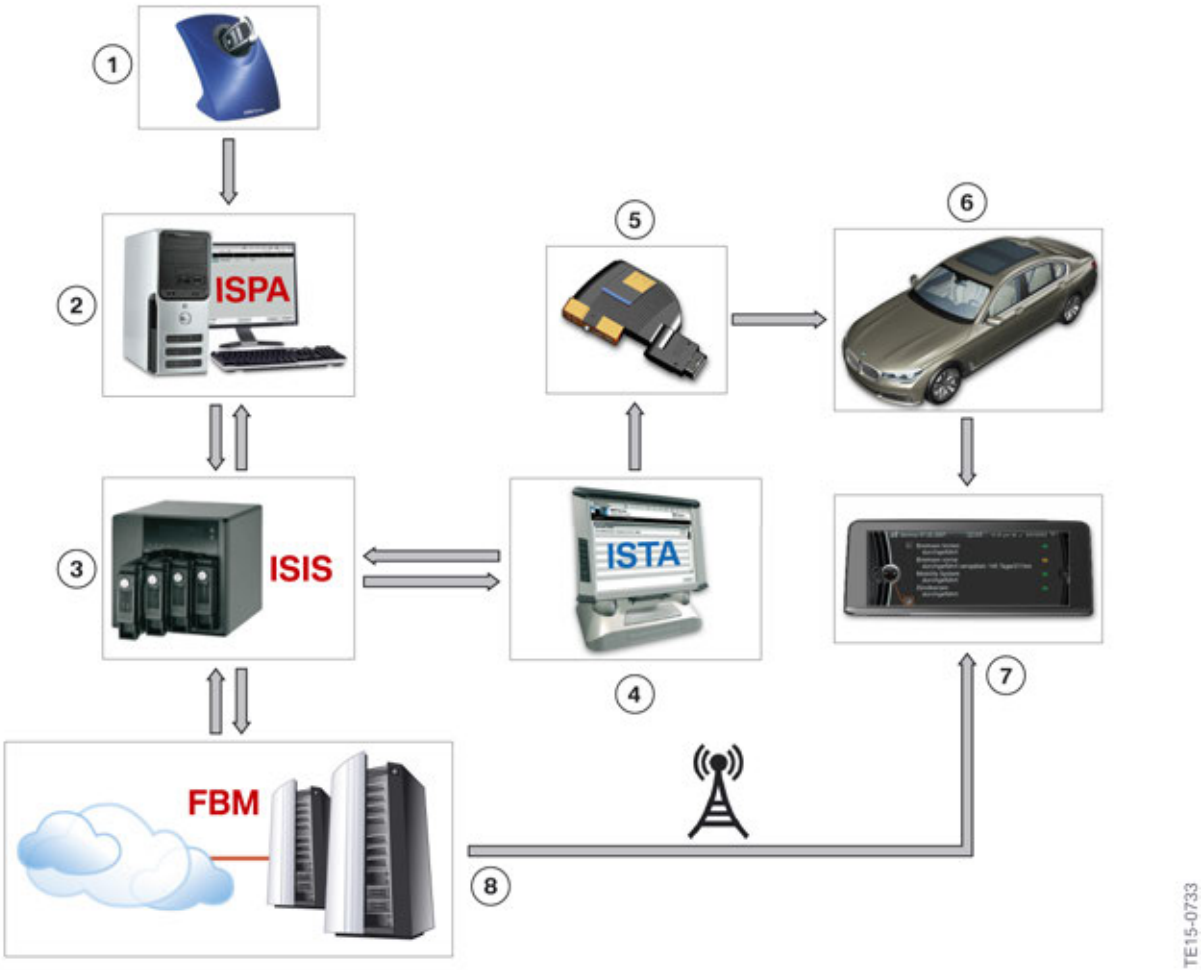

G12 Service history function

Index	Explanation
1	KeyReader with ID transmitter
2	Integrated Service Processes Application (ISPA)
3	ISPI NAS server (ISIS)
4	Integrated Service Technical Application (ISTA)
5	Integrated Communication Optical Module (ICOM)
6	G12
7	Central Information Display (CID)
8	Vehicle description module (FBM) on a server at BMW (data master)

G12 Displays and Controls

13. Owner's Manual

13.1. Integrated Owner's Manual

The BMW 7 Series features an integrated Owner's Manual. The function of the integrated Owner's Manual is unchanged (keyword search, picture search, animations). The graphics are now of a higher quality thanks to the use of a new head unit (Head Unit High 2).

G12 Integrated Owner's Manual

G12 Displays and Controls

13. Owner's Manual

13.2. Internet

The Owner's Manual is also available online and can be accessed either in the protected MyBMW area or openly, depending on market. The customer can therefore already inform himself/herself about the vehicle before it is received (internally at BMW, the online Owner's Manual can also be accessed on the Intranet).

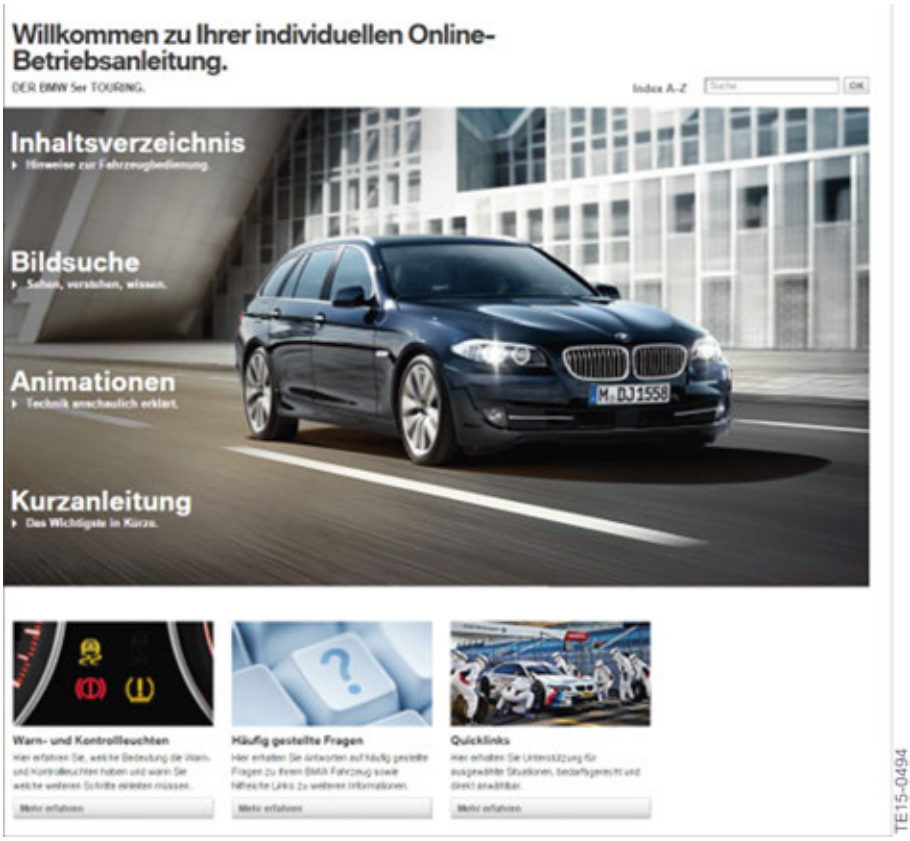

Owner's Manual on internet

13.3. BMW Driver’s Guide

The Owner's Manual can also be accessed using a smartphone or tablet via the “BMW Driver’s Guide” app. The app is available from the App Store for (iOS) or Google Play (Android).

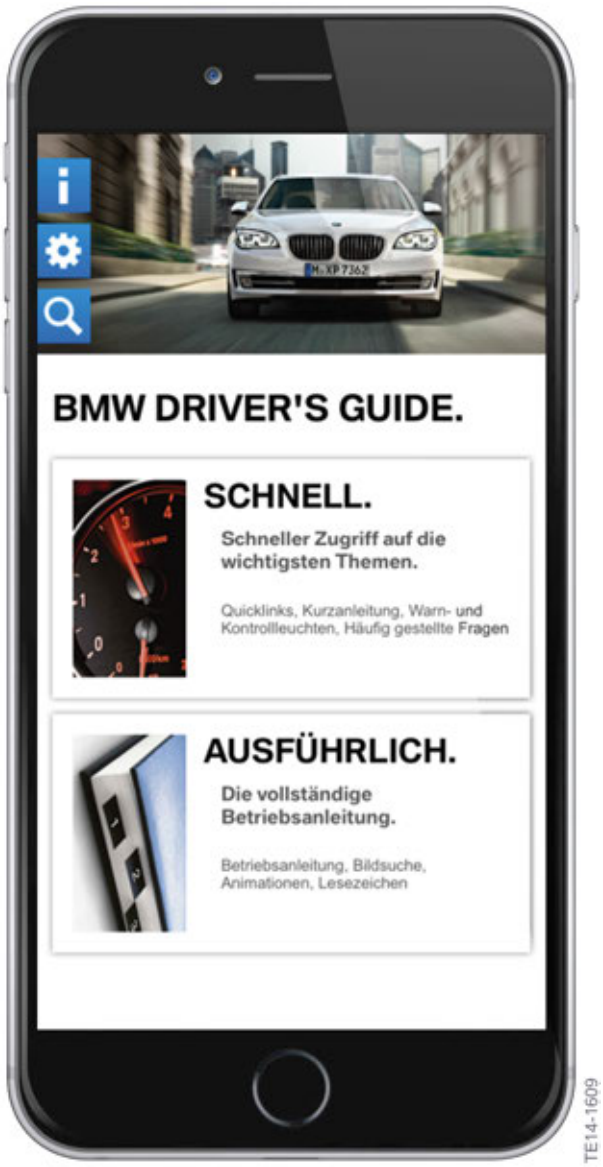

BMW Driver’s Guide

Bayerische Motorenwerke Aktiengesellschaft
Qualifizierung und Training
Röntgenstraße 7
85716 Unterschleißheim, Germany

Technical training.
Product information.

G12 Navigation System

Edited for the U.S. market by:
BMW Group University
Technical Training
ST1501 9/1/2015

BMW Service

General information

Symbols used

The following symbol is used in this document to facilitate better comprehension or to draw attention to very important information:

⚠

Contains important safety information and information that needs to be observed strictly in order to guarantee the smooth operation of the system.

Information status and national-market versions

BMW Group vehicles meet the requirements of the highest safety and quality standards. Changes in requirements for environmental protection, customer benefits and design render necessary continuous development of systems and components. Consequently, there may be discrepancies between the contents of this document and the vehicles available in the training course.

This document basically relates to the European version of left hand drive vehicles. Some operating elements or components are arranged differently in right-hand drive vehicles than shown in the graphics in this document. Further differences may arise as the result of the equipment specification in specific markets or countries.

Additional sources of information

Further information on the individual topics can be found in the following:

- Owner's Handbook
- Integrated Service Technical Application.

Contact: conceptinfo@bmw.de

©2015 BMW AG, Munich

Reprints of this publication or its parts require the written approval of BMW AG, Munich

The information contained in this document forms an integral part of the technical training of the BMW Group and is intended for the trainer and participants in the seminar. Refer to the latest relevant information systems of the BMW Group for any changes/additions to the technical data.

Information status: **June 2015**
BV-72/Technical Training

G12 Navigation System

Contents

1. Introduction **1**

2. System Overview **2**
- 2.1. System network 2
  - 2.1.1. Bus overview 2
  - 2.1.2. Functional wiring diagram 5
- 2.2. System wiring diagram 7
  - 2.2.1. Navigation system 7

3. System Components **9**
- 3.1. Introduction 9
- 3.2. Operation/display 10
  - 3.2.1. Controller 10
  - 3.2.2. Central Information Display (CID) 11
  - 3.2.3. Voice processing system (SVS) 12
- 3.3. Extended displays for navigation system 12
  - 3.3.1. Instrument cluster and HUD 12
- 3.4. Navigation computer/navigation software 14
  - 3.4.1. Navigation computer in the Head Unit High 2 14
  - 3.4.2. Hard disk drive HDD and map update 15
- 3.5. Sensor system of the navigation system 17

4. Navigation Functions **18**
- 4.1. Introduction 18
- 4.2. Selection and settings 18
  - 4.2.1. Toolbar 18
  - 4.2.2. Map view settings 19
  - 4.2.3. Full-screen mode 22
- 4.3. Destination input 23
  - 4.3.1. Destination input by means of controller and touch screen 24
  - 4.3.2. Direct input (interactive map and touch operation) 25
  - 4.3.3. Voice processing system and ConnectedDrive 26
- 4.4. Display (Guiding) 27
  - 4.4.1. Split screen variants 27
  - 4.4.2. Guiding in the instrument cluster 29
  - 4.4.3. Guiding in the Head-Up Display 29
- 4.5. Changing route (Routing) 30
  - 4.5.1. Alternative routes 30
  - 4.5.2. Changing the route manually 30
  - 4.5.3. Route simulation 31
  - 4.5.4. Avoid route 32

G12 Navigation System

Contents

4.5.5. Learning navigation 32
4.6. Special functions 34
4.6.1. Activation points of camera system 34
4.6.2. Journey planner 35
4.6.3. Quick search 37

5. Voice Processing System (SVS) 38
5.1. History 38
5.2. New development/further development 39
5.2.1. Introduction 39
5.2.2. Natural language understanding applications 40

G12 Navigation System

1. Introduction

A high-end navigation system the Navigation Professional system (SA 609) is offered for the G12 as standard equipment in the US market. The heart of the **hardware** is the next generation Head Unit High 2. All calculations of the navigation system are performed in this unit. The reception and sensor electronics components were distributed among several control units in the G12.

The 3-year subscription introduced with the F23 for **map data updates** is also fully implemented for the G12. There are also new challenges for the service organization.

In terms of **navigation hardware**, the navigation system consists of a fixed 12.3" Central Information Display (CID) with touch screen with a resolution of 1440 x 540 pixels, the Head Unit High 2 HU-H2 and the iDrive controller (CON).

With regards to **operation**, the iDrive controller with rotary and push-button function and the touch-sensitive surface with handwriting detection (iDrive Touch Controller) are standard options for the US market. The favorite buttons on the head unit have a new feature as well as the **touch screen operation** on the Central Information Display (CID).

There are also a host of new features for the **navigation functions** in the G12. These relate to the areas of map view, destination input, display (guiding), routing and the special functions for navigation. The highlights include the newly designed Micro City Map with a scale of up to 10 m, the learning navigation function, the route magnet and route visualization by means of an aerial view.

In addition, control of the navigation system via the **voice processing system (SVS)** was significantly improved in the G12. The modified visual/acoustic feedback of the SVS in the vehicle facilitates operation. A new feature is an additional off-board version of the voice processing system via the SIM card permanently installed in the vehicle. Like with SIRI® from Apple® or the **"Speech to text" function** (Message Dictation by Nuance®) introduced at BMW in 2012, the off-board SVS is processed by an external provider and transmitted back to the vehicle in seconds. You can find out about the differences between the individual embedded (onboard) and off-board SVS versions in this training manual.

A main application area for the **voice processing system (SVS)** with its embedded (hard disk) and off-board (BMW backend) services is navigation. That is why the topic of SVS, which has hardware components distributed throughout the vehicle, is covered in this training manual. You can find out about the new and distinguishing features in the area of embedded/off-board SVS and natural language understanding here.

G12 Navigation System

2. System Overview

2.1. System network

2.1.1. Bus overview

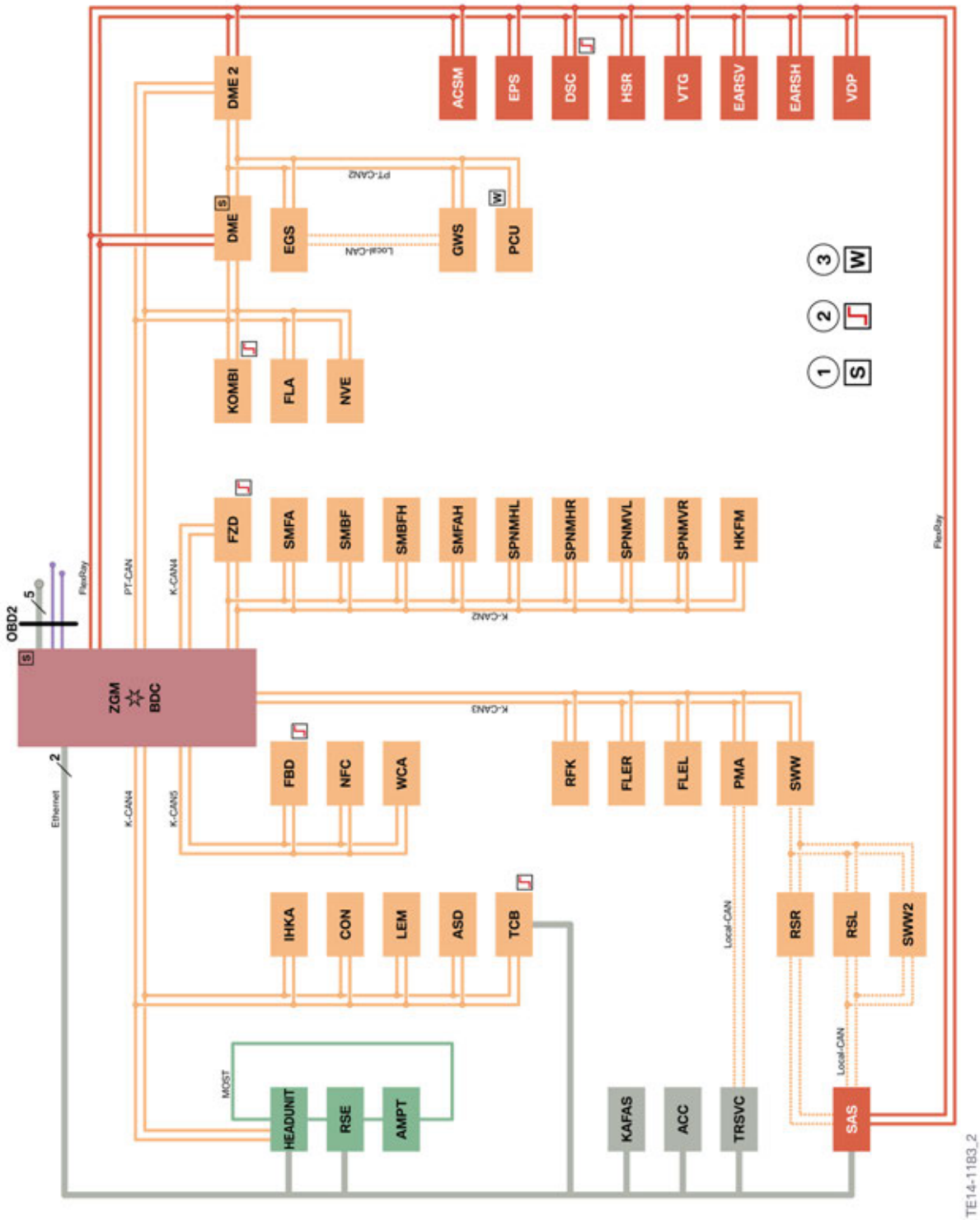

G12 bus overview

G12 Navigation System
2. System Overview

Abbreviation	Explanation
ACC	Active cruise control
ACSM	Crash Safety Module
AMPT	Amplifier Top (top high fidelity amplifier)
ASD	Active Sound Design
BDC	Body Domain Controller
CON	Controller
DME	Digital Motor Electronics
DSC	Dynamic Stability Control
EARSH	Electric active roll stabilization rear
EARSV	Electric active roll stabilization front
EGS	Electronic transmission control
EPS	Electromechanical Power Steering
FLA	High-beam assistant
FLER	Frontal Light Electronics Right
FLEL	Frontal Light Electronics Left
FZD	Roof function centre
GWS	Gear selector
HEADUNIT	Head Unit High 2
HKA	Automatic rear air-conditioning and heating
HKFM	Tailgate function module
HSR	Rear axle slip angle control
IHKA	Integrated automatic heating / air conditioning
KAFAS	Camera-based driver support systems
KOMBI	Instrument panel
LEM	Light Effect Manager
NFC	Near Field Communication
NVE	Night Vision Electronics
PCU	Power Control Unit
PMA	Parking maneuvering assistant
RFK	Reversing camera
RSE	Rear Seat Entertainment
RSL	Radar Sensor Left (avoidance assistant)
RSR	Radar Sensor Right (avoidance assistant)
SAS	Optional equipment system
SMBF	Seat module, passenger

Abbreviation	Explanation
SMFA	Seat module, driver
SMFAH	Seat module, driver, rear
SPNMHL	Seat pneumatics module back left
SPNMHR	Seat pneumatics module back right
SPNMVL	Seat pneumatics module front left
SPNMVR	Seat pneumatics module front right
SWW	Lane change warning (primary)
SWW2	Lane change warning (secondary)
TCB2	Telematic Communication Box 2; Telematic Control Unit 2
TRSVC	Control unit for rear view camera and SideView
VDP	Vertical Dynamic Platform
VTG	Transfer box
WCA	Wireless Charging tray
1	Start-up node control units for starting and synchronizing the FlexRay bus system
2	Control units with wake-up authorisation
3	Control units also connected at terminal 15WUP

G12 Navigation System

2. System Overview

2.1.2. Functional wiring diagram

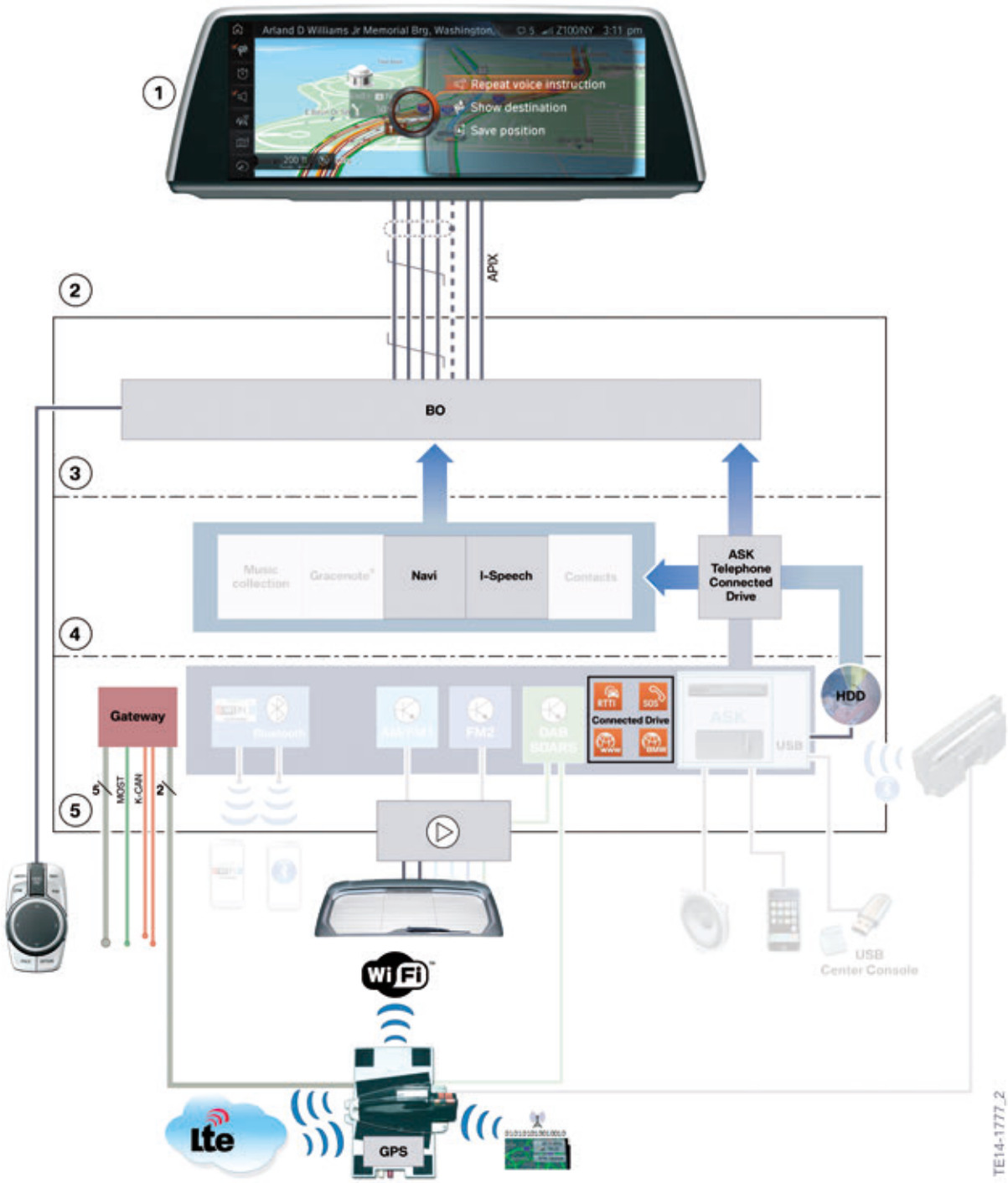

Functional wiring diagram for navigation system G12

G12 Navigation System

2. System Overview

Index	Explanation
1	Central Information Display (CID)
2	Head Unit High 2
3	User interface
4	Application/software
5	Interfaces/tuner/hardware connections

G12 Navigation System

2. System Overview

2.2. System wiring diagram

2.2.1. Navigation system

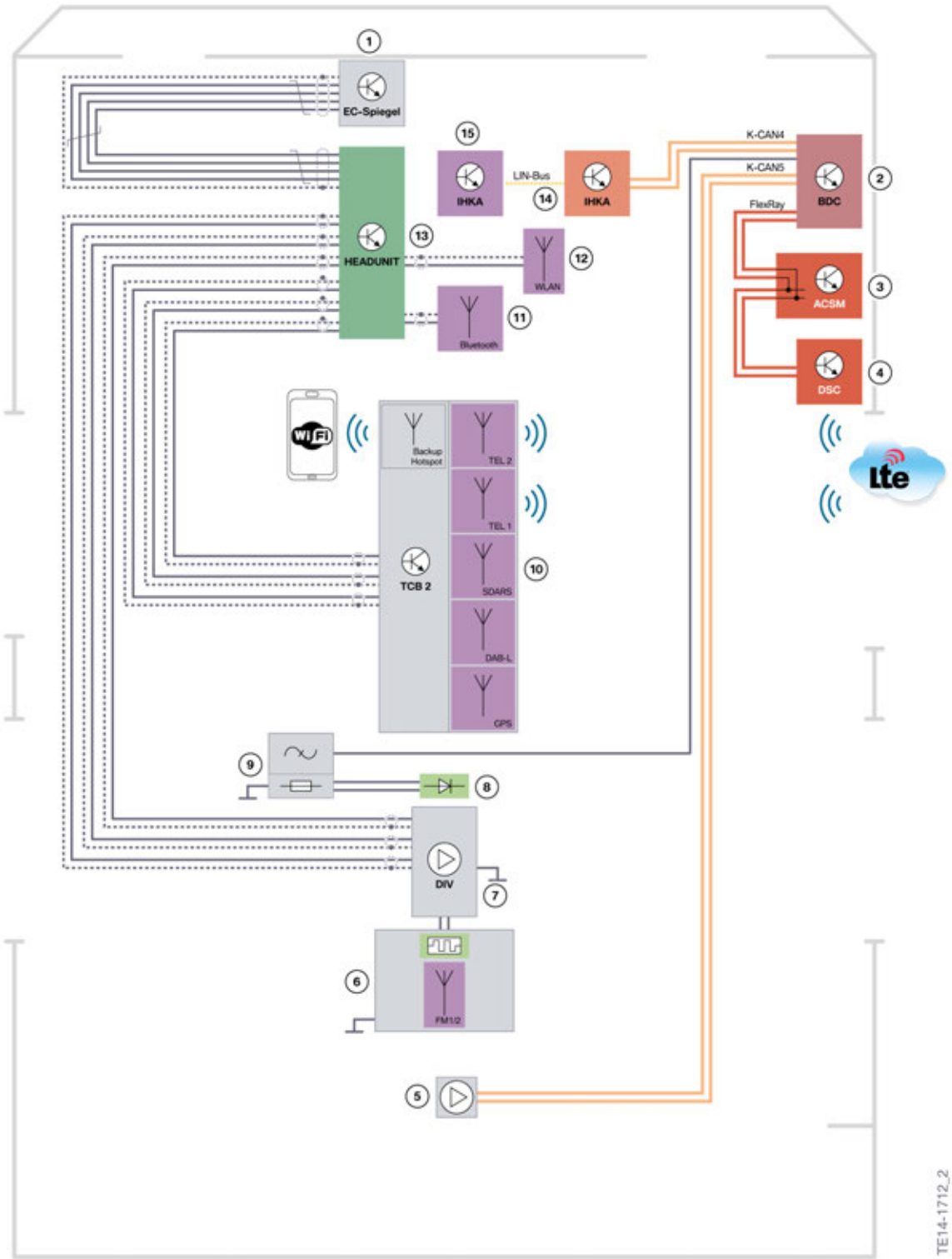

G12 Navigation System

2. System Overview

Index	Explanation
1	Electrochromatic mirror
2	Body Domain Controller (BDC)
3	Advanced Crash Safety Module (ACSM)
4	Dynamic Stability Control (DSC)
5	Remote control service receiver (FBD) (with K-CAN connection for first time)
6	Rear window diversity and antenna amplifier (FM/AM and FM2)
7	Rear window heating and antennas (FM/AM and FM2)
8	Additional brake light
9	E-filter against interference from additional brake light
10	Antenna system + control unit TCB2 for convenient telephone (SA 6NS) or Telephone with Wireless Charging (SA 6NW); snap-in roof-mounted antenna in the fin with SDARS (US), TEL1 (telephone), TEL2 (telematics) and GPS.
11	Bluetooth antenna connected to the Head Unit High 2
12	Wi-Fi®Direct antenna connected to the Head Unit High 2
13	Head Unit High 2
14	Integrated automatic heating / air conditioning (IHKA)
15	IHKA control panel

G12 Navigation System
3. System Components

3.1. Introduction

The G12 has been extended with a number of functions with respect to **operation** of the navigation system in addition to the **newly designed Touch Controller**. The gesture recognition camera is not yet used for the navigation function at the series launch. However, a number of gestures for navigation are planned for the near future. The Central Information Display (CID) will already be equipped with a **touch display** at the series launch. All functions of the navigation system can be operated with this.

Input via the **voice processing system** promises a quantum leap forward. Here, embedded SVS (hard disk) or off-board SVS (BMW backend) is offered in combination (which is standard on US market G12 versions).

The GPS tuner for the navigation system was relocated to the **TelematicCommunication Box (TCB2)**. This was possible for the G12 since the TCB2 is included in the standard equipment in all vehicles of the BMW 7 Series.

The TCB2 is connected directly with the roof fin as a hardware component. You can find details on the TCB2 in the “G12 Telephone and telematic systems” training manual. The yaw rate sensor and longitudinal acceleration sensor have also been relocated and their signals are transmitted to the Head Unit High 2 via the bus system. An FM triple tuner is available for traffic information. This supplies RDS/TMC information to the head unit at regular intervals. If the customer has ordered the optional equipment Real Time Traffic Info RTTI (OE 6AM) via the ConnectedDrive Store or ex-works, this information is displayed in the G12 navigation system as additional traffic information with colored messages and diversion recommendations.

The **navigation software with application and navigation map data** is again installed on a partition of the 200 GB hard disk in the Head Unit High. A new feature here above all is the automatic map update process in combination with a 3-year subscription for the customer.

Function	Components
Operation/display	
Gestures (not yet available for navigation at series launch)	Gesture recognition camera (OE 6U8)
Touch	Touch screen (OE 609; 601)
Touch	Touch Controller (standard equipment)
Rotate/press/slide	Touch Controller (standard equipment)
Language	Voice processing system (standard equipment)
Language	ConnectedDrive Concierge Services (OE 6AN) via the ConnectedDrive Telematic System TCB2
Extended displays	
Display, centre of vehicle	Central information display with touch screen (OE 609)
Display, driver's position	Instrument cluster standard equipment or multifunctional instrument display (OE 6WB)
Display, driver's position, raised	Head-up Display (SA 610)

G12 Navigation System
3. System Components

Function	Components
Navigation computer/navigation software	
Navigation application	Head Unit High 2 Hard Disk Drive (HDD)
Navigation map data	Head Unit High 2 Hard Disk Drive (HDD)
Sensor system/evaluation electronics	
GPS reception	GPS antenna in the roof fin
GPS tuner	GPS tuner in the TCB2
Yaw sensor	ACSM
Longitudinal acceleration	DSC sensor system

3.2. Operation/display

3.2.1. Controller

The controller (CON) in the G12 has a touch control panel and 7 direct access keys. A new feature is that the menus on the left side CD/Multimedia and have now been combined into **Media** . The telephone menu has moved from the right to the left side and is now called **COM** for communication.

By combining CD/Multimedia and Radio, space was created on the **right side of the controller** for another direct access key. There are now **2 buttons** on the right that can be used to access the navigation system:

- **“MAP”** to access the previous Map submenu of the navigation system.
- **“NAV”** to access destination input of the navigation system.

Controller G12 with installation location

The two direct access keys for the navigation system on the controller

3.2.2. Central Information Display (CID)

With Navigation Professional (SA 609), a fixed 12.3" **touch screen** with a resolution of 1440 x 540 pixels has now been integrated on the Central Information Display (CID).

Further information on the touch display is available in the “G12 Displays and Controls” training manual.

Touch display in the G12

The touch screen allows selection of all functions in the navigation system that can also be selected via the controller.

3.2.3. Voice processing system (SVS)

The voice processing system (SVS) has been introduced for the first time in the G12. Using an off-board SVS database managed by an external provider, voice commands can now be processed directly by the system that were previously not understood. The language dialogue takes place as if you are having a conversation with a chauffeur and not with an electronic system.

The new feature is known as "natural language understanding" and the basic functions are already present on the hard disk drive in the head unit. Additional functions such as the recognition of Points of Interest (POIs), e.g. the Allianz Arena in Munich, Wembley Stadium in London or the Fontana di Trevi in Rome are recognized without problems by the system. However, the data connection to the provider mentioned above is necessary for this.

The voice processing system for the G12 will be offered in different quality levels. You can find out more details about this in Chapter 6.

Input destination POI Allianz Arena

3.3. Extended displays for navigation system

3.3.1. Instrument cluster and HUD

The Central Information Display (CID) as the only display element for navigation has long since been history. Today, additional display of navigation commands in the instrument cluster is part of the standard equipment. Extended functions can be found in the multifunctional instrument cluster (OE 6WB) and in the Head-Up Display (OE 610).

As the basic version, the navigation message field is shown in the standard instrument cluster on a TFT display inside the fixed engine speed display dial (TFT 8.8”; 1280 x 480 pixels).

G12 Navigation System

3. System Components

Instrument cluster G12

The different sizes of the two TFT displays are evident in the direct comparison with the multifunctional instrument cluster.

Comparison of the navigation display on the two instrument cluster versions G12

Index	Explanation
1	Instrument cluster with fixed engine speed display dial (Not for US)
2	Multifunctional instrument cluster with larger TFT display (SA 6WB - Dynamic Digital Instrument Cluster)

With the multifunctional instrument cluster (SA 6WB - Dynamic Digital Instrument Cluster), the instrument dials for speed reading, engine speed display as well as fuel and engine temperature display are displayed fully electronically. This is made possible by a 12.3" TFT display with a resolution of 1920 x 720 pixels.

Due to the size of the TFT display, it is possible here to hide the electronic pointers with rpm digits if required and to display the High Guiding (auxiliary route arrows) on the complete right half of the instrument cluster.

If you wish to find out more about the two instrument clusters and modes, please refer to the "G12 Displays and Controls" training manual.

3.4. Navigation computer/navigation software

3.4.1. Navigation computer in the Head Unit High 2

The navigation software is stored on the hard disk drive of the Head Unit High. This means that the head unit is the navigation computer of the vehicle. The map material is also stored on the hard disk drive in the Head Unit High 2 (HU-H2).

A new feature is the fact that the complete sensor system of the navigation system has been decentralized and is now located in different control units of the G12. The processed navigation data from the GPS antenna and GPS tuner is sent by the Telematic Communication Box 2 to the Head Unit High 2 via the new OABR Ethernet bus system.

The data of the yaw rate sensor for the navigation system is provided by the Advanced Crash Safety Module (ACSM). In combination with the longitudinal acceleration data from the Dynamic Stability Control (DSC), this data is also transmitted to the Head Unit High 2 via FlexRay and BDC.

Installation location of the HU-H2

3.4.2. Hard disk drive HDD and map update

The navigation application (navigation software) is integrated in the operating system of the HU-H2, which has a specified size of 4 GB. The hard disk partition for the navigation map material remains unchanged at 100 GB.

Since the map data is part of the head unit and its hard disk drive, the topic of map update is covered together with **the complete description of the Head Unit High 2** in the “G12 Audio system” training manual. The procedures for a FULL map update or partial update (automatic map update) are described there.

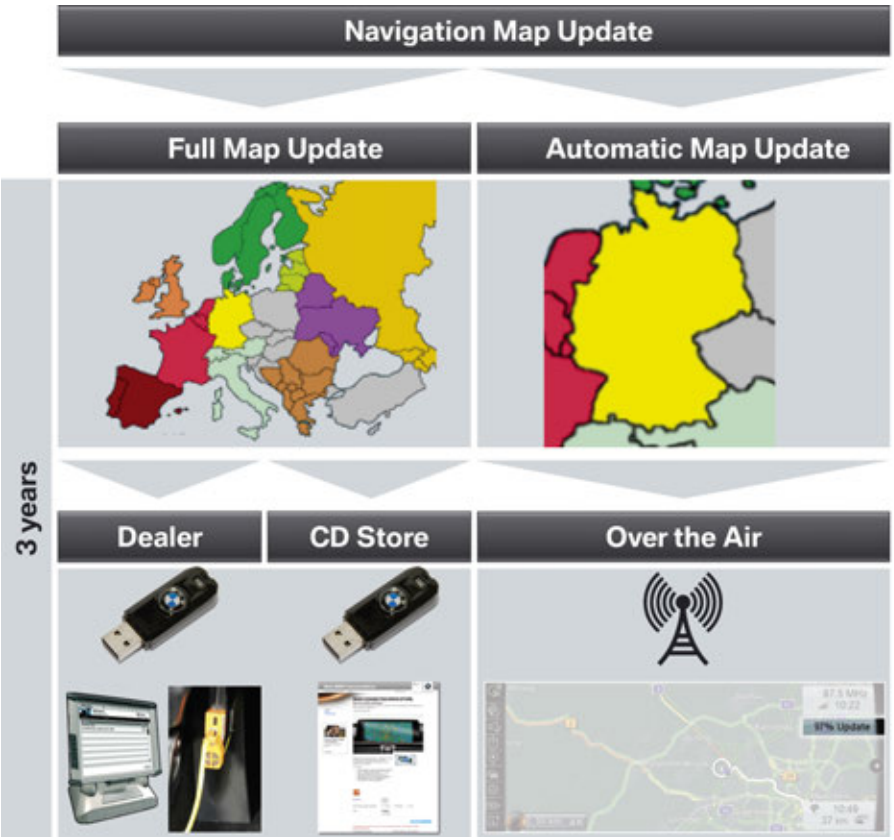

With the automatic update function introduced for the first time in a BMW 7 Series, the complete data is not updated in the update process (example: about 30 GB are needed for the map of Europe); instead, only the current changes for each defined update area (a maximum of 350 MB) are updated.

For example: Germany cluster or Spain cluster, Italy cluster, etc.

G12 Navigation System

3. System Components

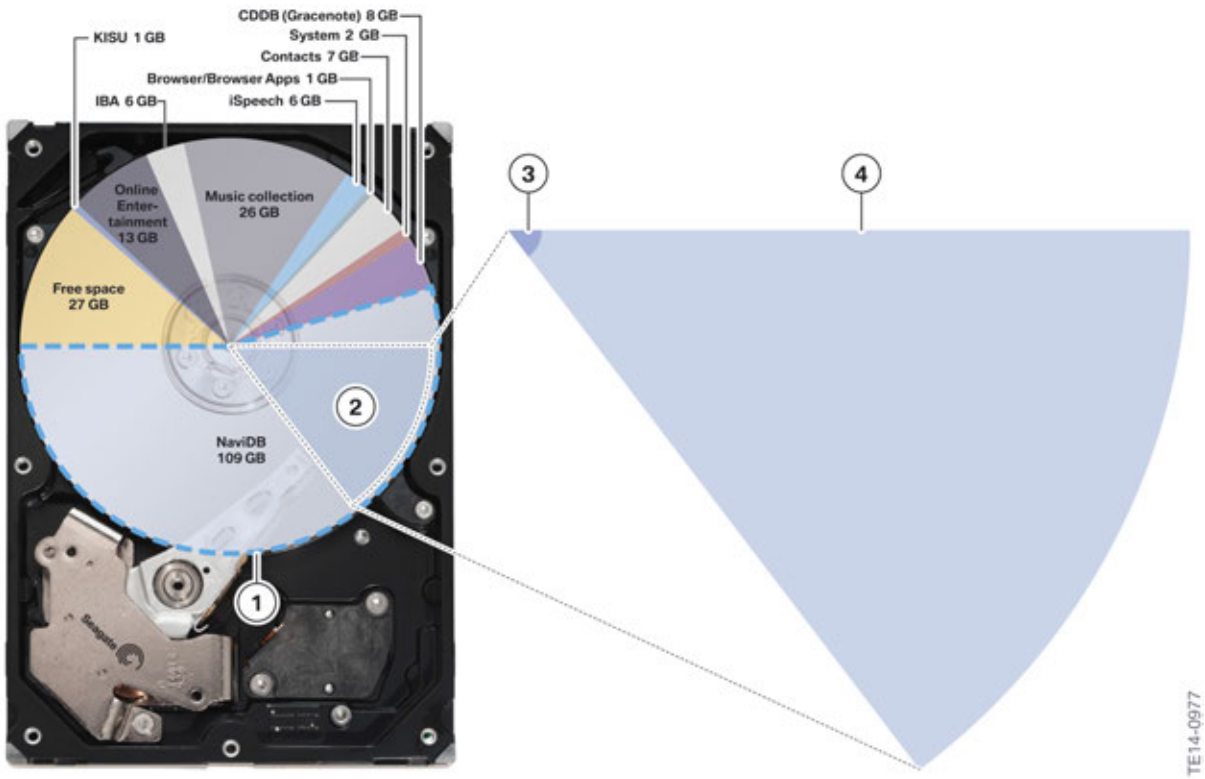

Partitioning of Head Unit High 2 example

1	**Navigation area of the hard disk drive (partition with 106 GB)**
2	Map data (example Europe: about 30 GB)
3	Streaming updates maximum of 350 MB every three months via "Automatic Map update"; according to the state, region of the customer (e.g. Germany)
4	Remaining map of Europe = (29.5 GB) which is not automatically updated

G12 Navigation System

3. System Components

3.5. Sensor system of the navigation system

Description	Sensor system/control unit
The data of the yaw rate sensor for the navigation system is provided by the Advanced Advanced Advanced Crash Safety Module (ACSM).	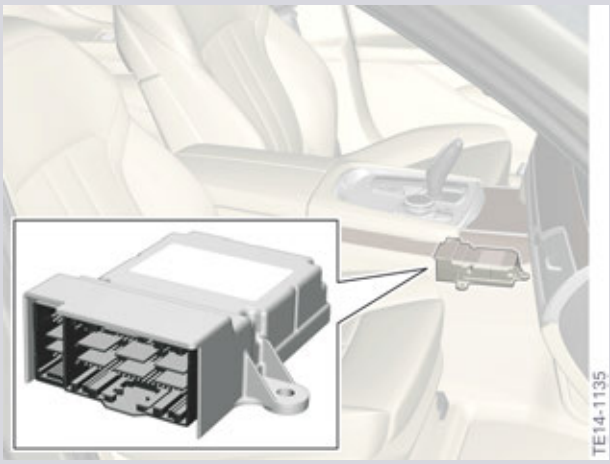
The GPS antenna is located in the roof antenna (fin); the GPS receiver (GPS tuner) is accommodated in the Telematic Communication Box 2 and transmits the data to the Head Unit High 2 with the new OABR Ethernet.	
The DSC as the control unit for longitudinal dynamics determines the vehicle speed in combination with the speed sensors of the DSC system and transmits this to the BDC via FlexRay. From here, the information on the vehicle speed is distributed in the vehicle.	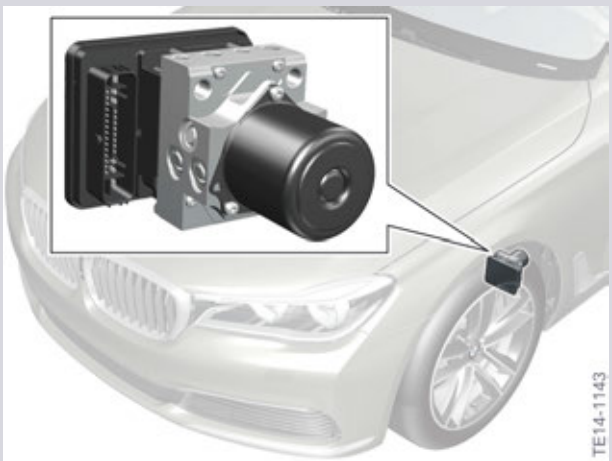

G12 Navigation System

4. Navigation Functions

4.1. Introduction

There are a host of new features for the **navigation system** in the G12. These relate to the areas of map view, destination input, display (guiding), routing and the special functions for navigation. The new features in particular for the navigation system in the G12 will be described below.

The following is an overview the navigation system functions of the G12. You can find details of all functions, adjustment options and national-market versions in the Owner's Manual of the vehicle.

4.2. Selection and settings

4.2.1. Toolbar

The navigation map is displayed after selection of "MAP" by pressing the controller button. The toolbar is the central control element here. All settings can be activated from here. The individual submenus can be accessed via the controller or, as a new feature, via the **touch screen**. In addition, the split screen can be activated by pushing the controller to the right and pressing. You can find out more details about the split screen in Chapter.

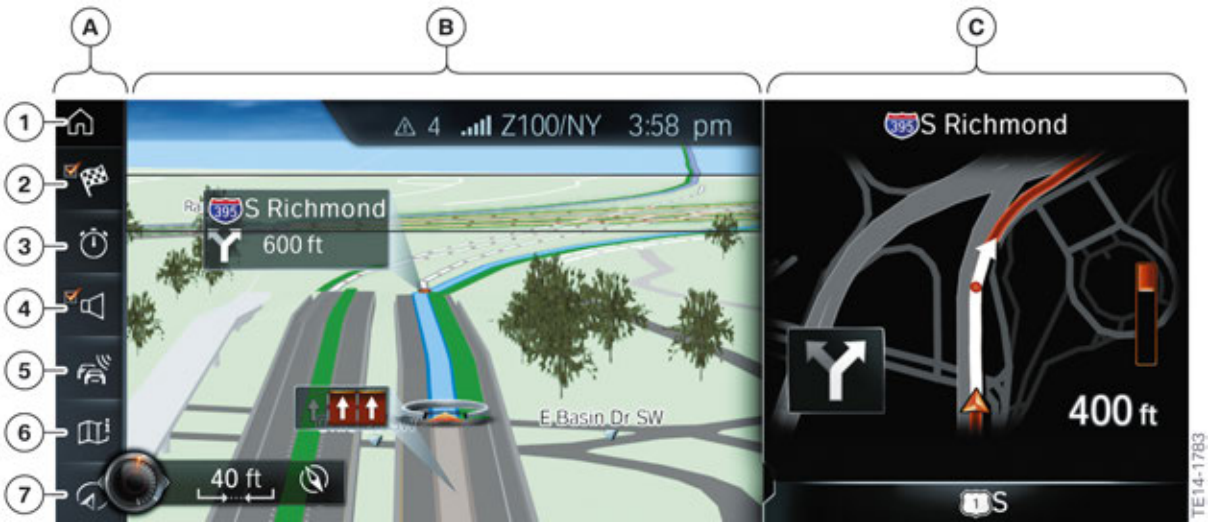

Navigation map with toolbar and with activated split screen

Index	Explanation
A	Toolbar
B	Reduced-size main screen
C	Split screen
Toolbar	
1	HOME button; return to main menu
2	Start/end route guidance

Index	Explanation
3	Change current route
4	Switch spoken instructions on and off
5	Traffic information (including RTTI or TMC activity display)
6	Display additional information on map
7	Select map view
	Interactive map (not visible on illustration, customer must scroll down for this)

4.2.2. Map view settings

There are several options available in the Map views submenu for setting the map view.

With the "Auto zoom" function, for example, the next maneuver is focussed. In other words, the scale is chosen so that the next maneuver is displayed in the smallest possible scale. The maximum zoom factor is then 50 m.

The highlight is the "Auto zoom with info" function. Here, lane and turn information is integrated directly into the navigation map.

Overview of the individual setting options for map display:

Navigation submenu Map views

G12 Navigation System
4. Navigation Functions

Index	Explanation
1	Perspective
2	Heading up
3	North up
4	Auto zoom
5	NEW: Auto zoom with info
6	Manual zoom
7	"Map views" icon in the toolbar

In addition, the following map views can be selected in the toolbar under the "Additional information" icon.

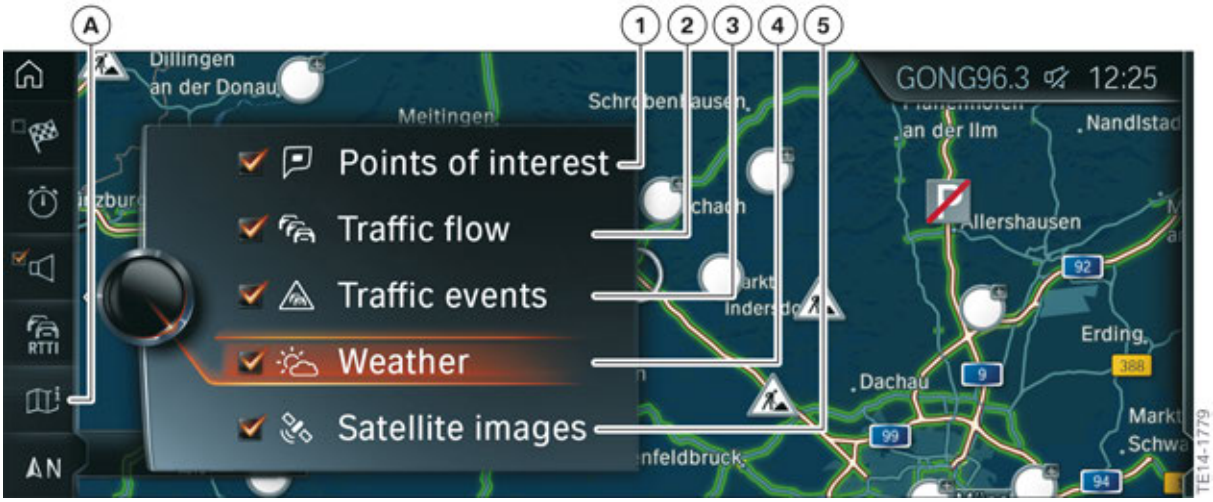

Navigation submenu Additional information

Index	Explanation
Toolbar	
A	Display additional information on map
Selection of additional information	
1	Points of interest (POIs)
2	Traffic flow
3	Traffic events
4	Weather in map
5	Satellite images

G12 Navigation System

4. Navigation Functions

In the option menu, it is additionally possible to select the following menu items in the "Settings" menu and "Map view settings" submenu:

- Map elements
- Map view
- Day mode/Night mode/Automatic mode

Additional map view option for map display in Day mode, Night mode and Automatic mode

Index	Explanation
1	Activation of Day mode
2	Activation of Night mode
3	Activation of Automatic mode

4.2.3. Full-screen mode

The complete 12.3" screen diagonal is used in full-screen mode. A few examples of the display in full-screen mode of the navigation system are shown below.

Different map variants in the G12 in full-screen mode

Index	Explanation
1	Direction of travel map. Zoom: 10 miles
2	Direction of travel map. Zoom: 5 miles; satellite image active
3	Perspective map: Zoom 50 m, POIs shown

One of the highlights of the navigation system in the G12 is the so-called **Micro City Model**. Here, it is possible for the first time to reproduce the urban map view in a very detailed map image. The urban zoom function permits representation down to 10 m.

G12 Navigation System
4. Navigation Functions

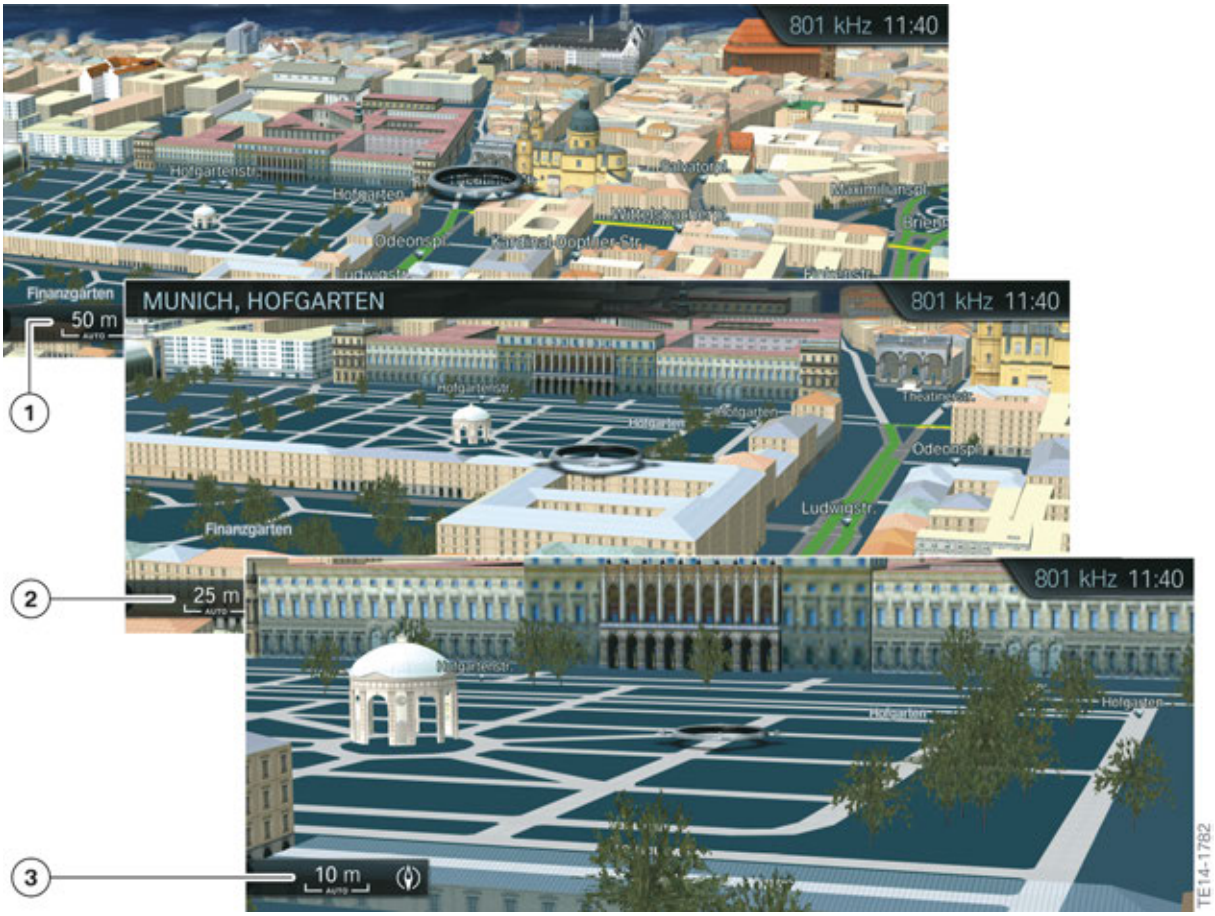

Micro City Map view

Index	Explanation
1	Zoom at 50 m (164 ft)
2	Zoom at 25 m (82 ft)
3	Zoom at 10 m (32 ft)

4.3. Destination input

The destination input has also been improved once more for the G12. The customer can choose whether he wishes to enter the destination by means of the controller or, by means of the (new) touch screen and input keyboard.

In addition, it is also possible to "drive" directly to the destination and select it in the "interactive map". This is also possible by means of the controller and touch screen.

Destination inputs are also possible via the voice processing system (SVS) and ConnectedDrive.

G12 Navigation System

4. Navigation Functions

4.3.1. Destination input by means of controller and touch screen

Input screens for destination input in G12

Index	Explanation
1	**Touch Controller**
1a	Input by means of the speller displayed in the CID in combination with the controller by turning, pressing and pushing
1b	Input by means of the speller displayed on the CID in combination with writing on the Touch Controller
2	**Central Information Display (CID) with touch function**
2a	CID – Touch input by means of keypad on the screen

4.3.2. Direct input (interactive map and touch operation)

Touch operation on the interactive map

Index	Explanation
1	Activate interactive map in the toolbar
2	Select a destination by touch
3	Save the desired destination

4.3.3. Voice processing system and ConnectedDrive

Voice processing system

The destination input function of the navigation system in the G12 was significantly improved by means of the **voice processing system (SVS)**. The voice processing system supports the customer by visual/acoustic feedback in the vehicle. After activation of the system at the "Push-to-talk" button on the multifunction steering wheel and a corresponding voice command by the customer, a new microphone symbol is displayed in the CID and instrument cluster.

Push-to-talk button on the multifunction steering wheel

A further innovation is the **off-board version** of the voice processing system via the SIM card permanently installed in the vehicle. Like with SIRI® from Apple® or the "Speech to text" function (Message Dictation by Nuance®) familiar at BMW since 2012, the off-board SVS is processed by an external provider and transmitted back to the vehicle in seconds. You can find out about the differences between the individual embedded and off-board SVS versions in Chapter 5.

ConnectedDrive Concierge Services

Since the number of ConnectedDrive markets is constantly growing, an increasing number of functions can use these functions. After connection setup with an employee at **Concierge Services (SA 6AN in the US)**, this employee can send the destination requested by the customer directly to the vehicle.

⚠

Transmission of the address data to the vehicle takes place after the conversation with the service employee of the Concierge Service. If the customer disconnects immediately after the conversation, the address data cannot be transmitted to the vehicle!

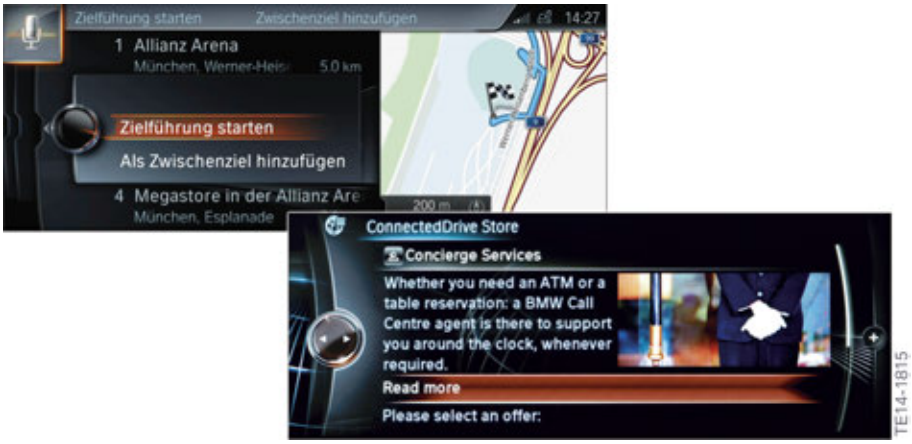

Microphone symbol after activation of SVS/ Concierge Services in the G12

4.4. Display (Guiding)

4.4.1. Split screen variants

The split screen was provided with 2 new and many familiar functions for navigation in the G12. As a highlight among the new functions, additional information is shown as a staggered roadbook in the **arrow display**.

Split screen Roadbook option

Index	Explanation
1	Turn instructions
2	Route with additional road works information
3	Turn-off information and additional lane recommendation

The following are possible as additional displays in the arrow display:

- Turn instructions
- Traffic flow and traffic events
- Status information
- Next road
- Distance to next manoeuvre
- Driving lane information
- Current road

As a second innovation, a compass is displayed when the arrow display is active but **no** route guidance is active.

4.4.2. Guiding in the instrument cluster

As described in Chapter 3, the inner display information of the engine speed display is hidden on both versions of the instrument cluster and the navigation content displayed here when route guidance is active. Turn recommendations, lane recommendations (Lane Guiding) and forward-looking route guidance (High Guiding) are then displayed on the right side of the TFT display.

Navigation display variants on the multifunctional instrument cluster in the G12

Index	Explanation
1	Turn instructions
2	Turn information with additional motorway information and Lane Guiding
3	Lane Guiding (driving lane recommendation) and High Guiding (forward-looking route guidance)

4.4.3. Guiding in the Head-Up Display

Guiding information is also shown on the Head-Up Display. The setting for this can be activated in the Vehicle settings menu under Head-Up Display. Details relating to the guiding information structure and the display shown on the Head-Up Display are provided in the "G12 Displays and Controls" training manual.

4.5. Changing route (Routing)

4.5.1. Alternative routes

Online alternative routes

In addition to the familiar possibility of calculating "alternative routes" in the vehicle which are already stored in the vehicle, a new option has now been realized in the vehicle with the permanently installed SIM card, the online alternative route. The advantage of this is above all the **coverage of the off-board solution** or online alternative route: this is much greater than the embedded solution with navigation data from the hard disk drive.

The online alternative route function is coupled to ConnectedDrive services (SA 6AK) and **not** to the Real Time Traffic Information (RTTI) (SA 6AM).

With the online alternative route function, the route alternatives are already made available before the RTTI information is received since the BMW backend can access current provider data. This additional information for the online alternative routes is supplied after selection of the route in the vehicle. It is transmitted **directly** from the BMW backend to the TCB2 in the vehicle and then to the head unit.

This may lead to a situation where calculation of online alternative routes is faster than updating of RTTI in the vehicle.

The calculation of the optimum route is based on traffic forecasts. In other words, the further the route planning is from the current vehicle position, the greater the extent to which the forecasts of the online alternative route are taken into account in the vehicle instead of the Real Time Traffic Information. Online alternative routes are available for the entire map material, whereas RTTI is displayed above all locally in a radius of 50-100 km (30 - 60 mls) around the vehicle.

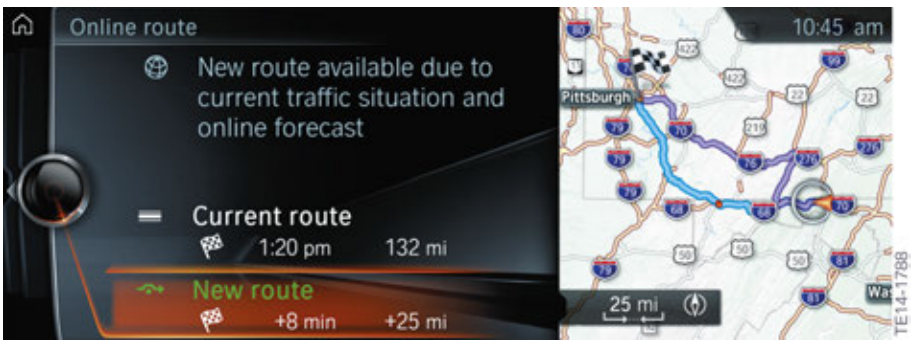

Online route

4.5.2. Changing the route manually

Route magnet

When route guidance is active, the route displayed on the map can be adapted manually. For this purpose, **a route magnet** is available for the first time in the G12. Using a marker point on the route, the customer can pull the route in the desired direction. Like on the interactive map, the corresponding point is displayed by means of cross-hairs. This cross-hairs can be moved via the controller or on the touch screen of the CID. After the customer has selected the desired route and confirmed this by pressing the controller, a corresponding "Accept magnet" message is displayed.

The route magnet can be selected in the submenu "Route" - "Change route" - "Add route magnet".

Route magnet in the G12

4.5.3. Route simulation

Aerial view

Using the aerial view function, it is possible to virtually fly over the route when the vehicle is stationary and route guidance is active, i.e. to simulate the complete journey to the entered destination. This function can be selected in the submenu "Route" - "Aerial view". If the controller is then tilted to the left, additional functions and settings become visible.

Aerial view in the G12

Index	Explanation
1	"Start" and "Stop" aerial view
2	Speed
3	Next route section
4	Previous route section
5	Jump to current position
6	Jump to destination

4.5.4. Avoid route

Areas to avoid

New, individual areas to avoid can be selected in the submenu "Settings” - Route settings"- "Areas to avoid". Areas to avoid can be places with a high crime rate, for example, or particularly poor roads which the customer wants to intentionally "avoid".

Selection of areas to avoid and subsequent activation

4.5.5. Learning navigation

By means of sensor systems

Using the sensor systems installed in the vehicle (KAFAS cameras, DSC sensor for longitudinal acceleration, yaw rate from the ACSM etc.), the saved navigation data is compared with the current road information. If the customer agrees, data relating to any detected deviations is sent back to the backend (BMW server) and all BMW customers can benefit from this measure. Transmission of this data is thus the further development of Floating Car Data, which has already been in use since 1999

in order to improve the traffic flow. The improved map information is passed on by BMW to the map supplier who can then correct his maps on the basis of this feedback. However, there is no direct improvement of the data on the hard disk drive in the vehicle.

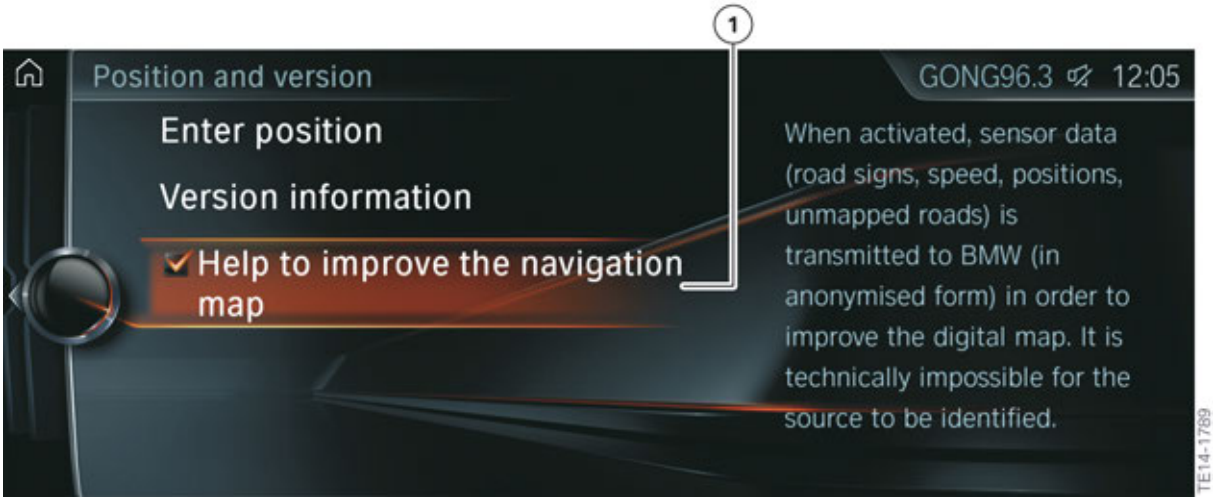

Improvement of map data by means of vehicle sensors

Index	Explanation
1	Agreement of the customer to participate in improvement of map data by means of vehicle sensor systems

By means of customer interaction

The customer can also intervene directly in the algorithm of his navigation system. The learning function of the navigation makes this possible. The customer can activate the function after selection in the submenu "Settings" - "Route settings" - "Learn route". If the customer intentionally deviates from the proposed route several times at the same place, this deviation is stored and taken into account in future route planning.

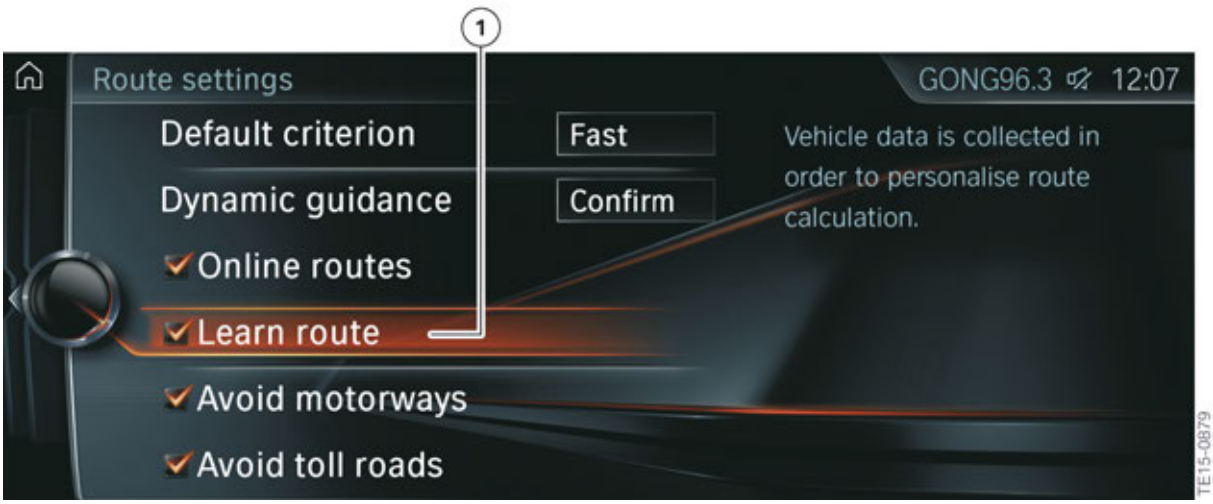

Activation of the "Learn route" function

Index	Explanation
1	Activation of "Learn route"

4.6. Special functions

4.6.1. Activation points of camera system

With the introduction of the 180° Panorama View camera in the front of the G12, a new function was also defined for the navigation system. This new function permits targeted selection of activation points for automatically switching on the panorama camera. In this way, the customer can make hazardous points on his route safer by making road areas that are particularly difficult to see visible with the camera system.

Activation

The customer activates this function in the menu "Vehicle settings" and the submenu "Parking".

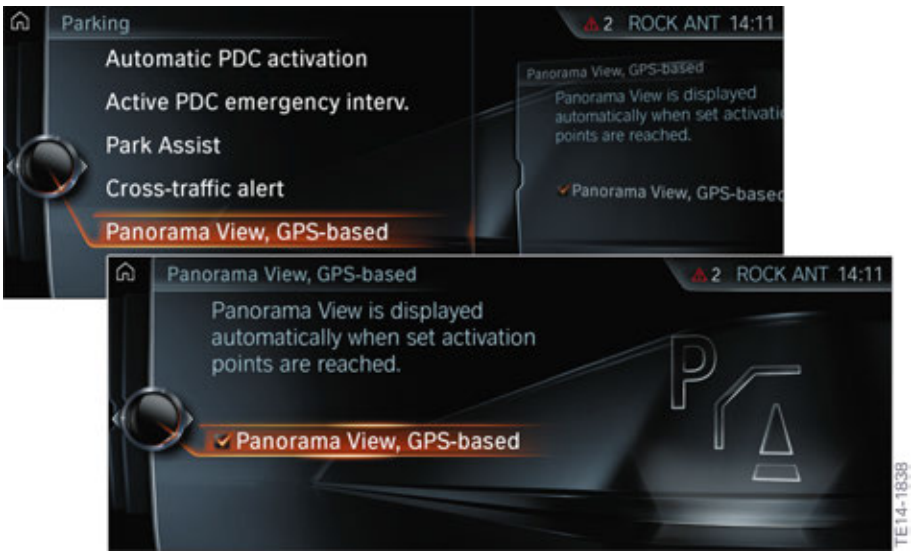

Activation of Panorama View function

Setting the activation points

The customer can activate a selection menu after activation of the Panorama View camera. In this selection menu it is possible to add, display or delete activation points.

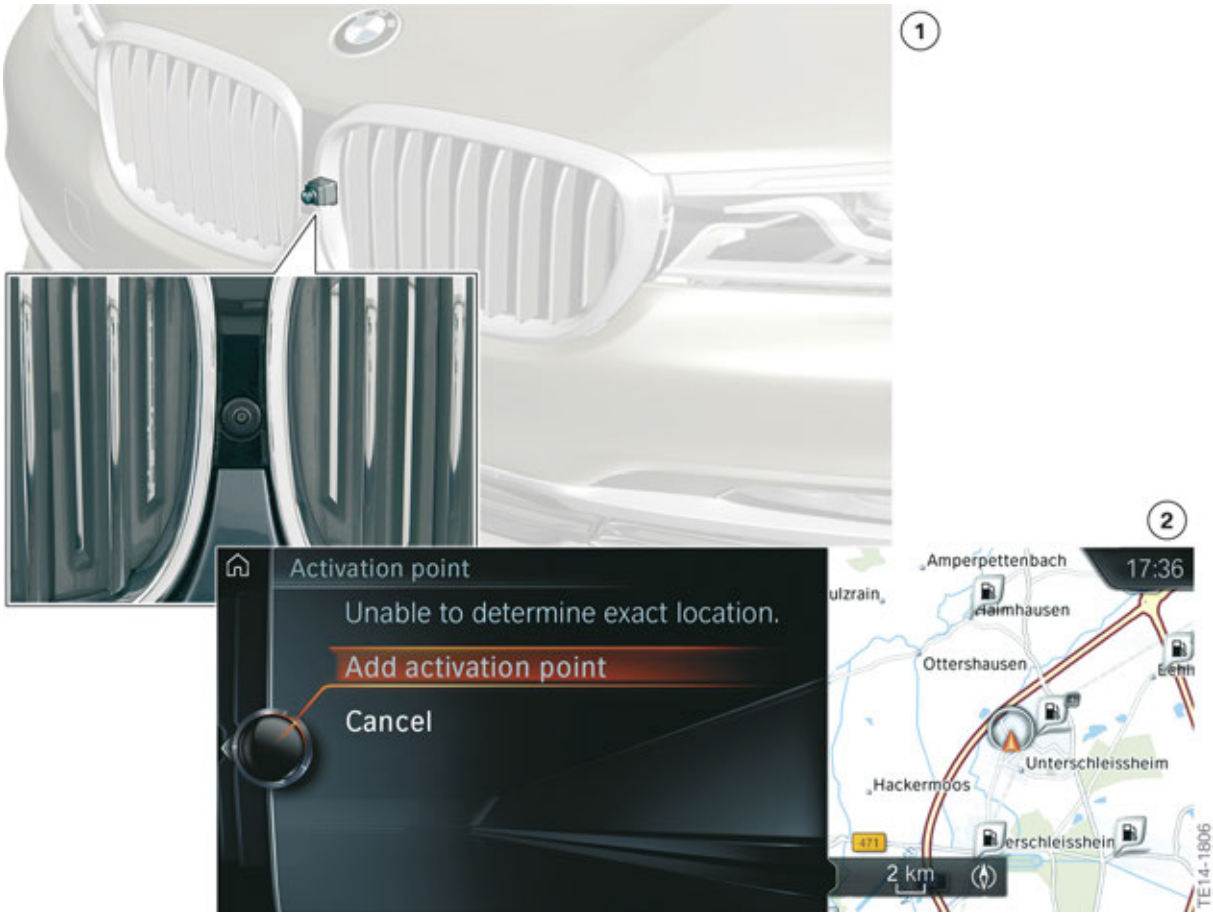

Adding an activation point for the Panorama View function

Index	Explanation
1	Panorama View camera in the front of vehicle
2	Adding an activation point

You can obtain further information on the Panorama View camera in the "G12 Assistance systems" training manual.

4.6.2. Journey planner

Like in the previous navigation system Professional, the G12 navigation system also includes a journey planner. The representation of the individual intermediate destinations has been improved here.

Journey planner with intermediate destinations

It is possible to change the sorting of the individual intermediate destinations in the Options menu.

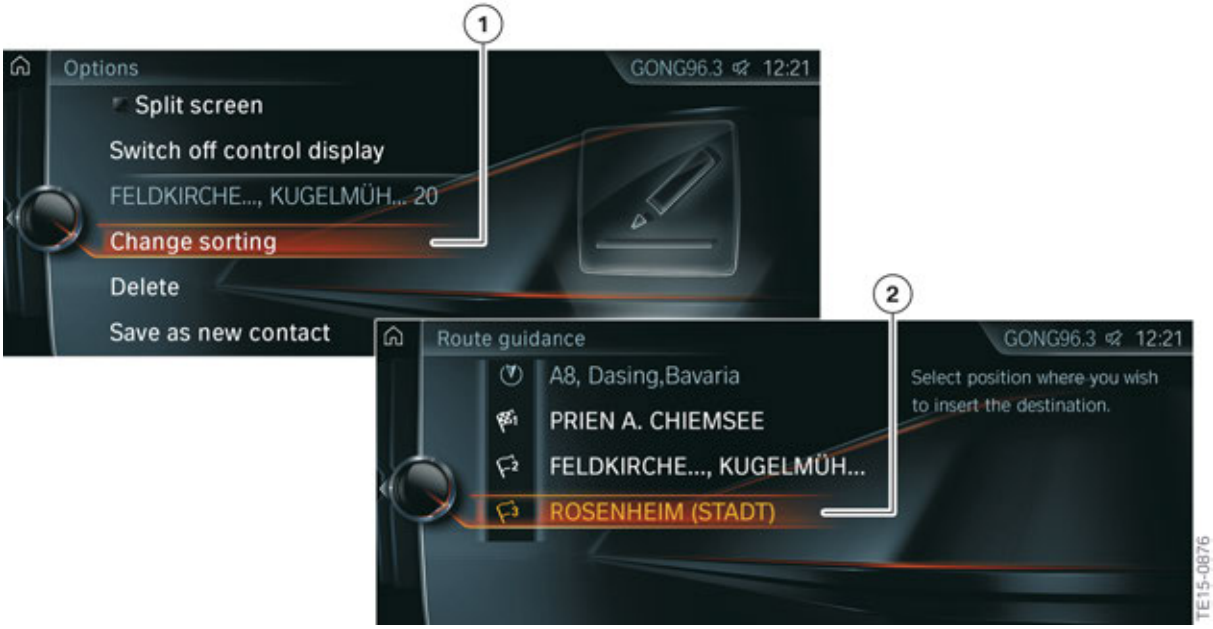

Changing the sorting order

Index	Explanation
1	Changing the sorting order of the journey planner
2	Selected town for changing the destination order in the journey planner

4.6.3. Quick search

The customer can find the new function "Quick search" under "Navigation" – "Other input options". The Quick search function allows the customer to enter a letter string to search for Points of Interest and addresses either online (with active ConnectedDrive contract) or in the navigation data stored on the hard disk drive in the vehicle. All entries are shown that contain this letter string.

For Points of Interest, enter the name of the POI, e.g. "Allianz Arena".

In the case of an address, it is possible to simultaneously search for a town and road. This is done by entering a letter string of the place name, then a space and a letter string of the road name.

In addition, it is also possible to activate the voice processing system in the Quick search function.

Quick search similar to Google® search

G12 Navigation System

5. Voice Processing System (SVS)

5.1. History

A **voice control system** was offered for the first time in **1998** in the E38 **(note that not all the dates sited here coincide with the function introduction dates in the US market)**. This allowed the driver to operate the telephone and navigation system without taking his eyes off the traffic conditions. As part of further development of the voice processing system, the number of spoken commands increased significantly in the following versions from the initial **30** commands.

In **2003**, the number of **spoken commands** grew to around **470.** This increase took place with the introduction of the first head unit with the navigation system Professional, the CCC for E63/E64 and E60.

For the interface box ULF-SBX-High in the year **2007**, the **voice input system High**, now already referred to as **voice processing system (SVS)**, was consistently enhanced. At this time, it was already possible to control communication, navigation, assistance window, on-board information, entertainment, climate and setting by means of voice commands. When the voice processing system High with a ULF-SBX-High was installed, it was possible to switch between **2 languages**. Only one language was available with the head unit CCC.

With the introduction of the head unit with 2nd generation Professional navigation system, the CIC, in **2008,** the voice processing system High was installed on a part of the internal Hard Disk Drive (HDD). This meant that over 1000 voice commands and 8 languages were then available. The language settings could be changed in the "Settings" menu.

In **2010**, the voice processing system SVS in the CIC was further enhanced. The so-called "One Shot" input was introduced in the navigation system. From now on, it was possible to enter the town, road and house number in the system in a coherent sentence. This data was then entered jointly in the system.

The last major new development was in **2012** with the introduction of the Head Unit High (HU-H) (3rd generation head unit with Professional navigation). The function “Message Dictation - Speech to text” allowed voice commands to be sent to an external provider for the first time. The speech was converted by the provider into text and the text modules then sent back to the head unit for further processing. From here the text was sent to the CID for display. The text could then be sent as an SMS text message or e-mail via a Bluetooth-paired customer mobile phone (MAP profile). This function could be found under the menu item Office, submenu “Compose”.

G12 Navigation System

5. Voice Processing System (SVS)

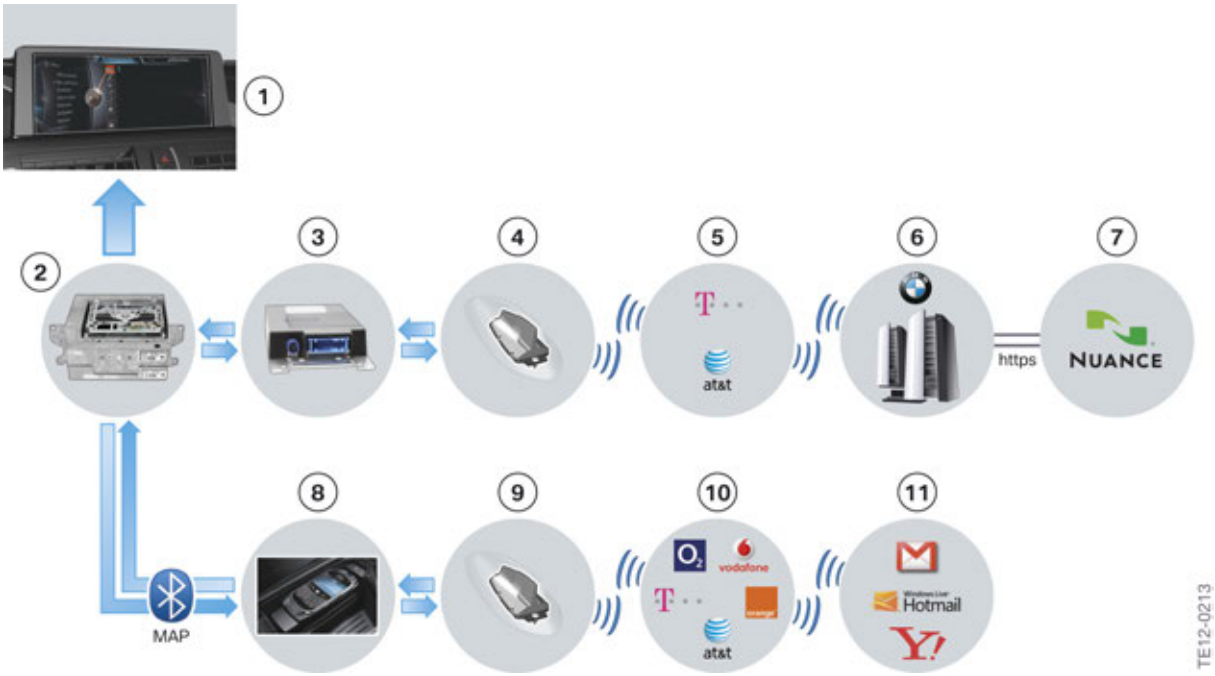

Message Dictation from 2012 with the introduction of the F01 LCI

Index	Explanation
1	Central Information Display (CID)
2	Headunit High
3	TCB
4	Roof fin with telematic antenna
5	Providers in 2012
6	BMW backend
7	Nuance® data provider
8	Customer's mobile phone
9	Mobile radio antenna in roof fin
10	Provider of the customer's mobile phone
11	Customer's e-mail provider

5.2. New development/further development

5.2.1. Introduction

A main application area for the **voice processing system (SVS)** with its embedded (hard disks) and off-board (BMW cloud backend) services is navigation. That is why the topic of SVS, which has hardware components distributed throughout the vehicle, is covered in this training manual. You can find out about the new and distinguishing features in the area of embedded/off-board SVS and natural language understanding below.

The voice processing system (SVS) used in the G12 has enhanced quality. Due to a new off-board database, voice commands can now be processed which could not be processed before. The SVS interacts as if you are talking to a chauffeur and not to an electronic system. A new kind of **natural language** communication between man and machine has now arrived in the G12.
The voice processing system is offered in different quality levels.

An interesting highlight of the new SVS system is the "Barge-In function". "Barge in" in this context means to interrupt the dialogue. It allows the customer to intervene directly in the speech dialogue without waiting for the response from the SVS. The new voice command then cancels the old voice command and the new voice command/speech dialogue is processed immediately.

Going forward, the system will also be able to evaluate and process whole sentences (like SIRI® from Apple®). It is no longer designed purely for recognition based on syntax (sentence structure). This function is embedded on the hard disk partition for the SVS on the Head Unit High 2. In Marketing, this system is referred to as Intelligent Voice Assistant.

5.2.2. Natural language understanding applications

ConnectedDrive markets

There are 2 functions using SVS off-board functionality for ConnectedDrive markets.

1. Message Dictation: The first version includes only Message Dictation ("Speech to Text function"). There are improved functions for the customer here with a simpler procedure. Whereas the customer previously had to register separately with the provider Nuance® for initial activation, this is now included in the ConnectedDrive Service (OE 6AK) and the customer can use the function in the vehicle as long as the ConnectedDrive function is active. He can then extend the function in the ConnectedDrive store.

Input of an SMS text message via voice processing system

The following languages are available as Message Dictation languages for the G12 at the series launch:

- German
- US English
- UK English
- French
- Italian
- Spanish
- Japanese
- Korean
- Chinese

2. Offboard SVS version 2 (Off-board Voice Processing):

As described for Message Dictation, the customer receives the functions via the ConnectedDrive Services (OE 6AK) in combination with the permanently installed, activated SIM card in the TCB2. In Marketing, this system is referred to as Off-board Voice Processing. The difference here is that in addition to Message Dictation (Off-board 1), the commands of the **complete voice processing system** are also processed via the Nuance® server and it is now possible to work with **natural language commands**.

This is known as the **NLU function** (NLU = Natural Language Understanding).

The advantage of this is that the search for points of interest (POIs) or entertainment sources can be narrowed down with the data processing performance of the Nuance® server, thereby permitting faster recognition. For example, when carrying out a POI search, the voice command: "Drive me to Wembley Stadium" will be recognized with an active ConnectedDrive contract.

G12 Navigation System

5. Voice Processing System (SVS)

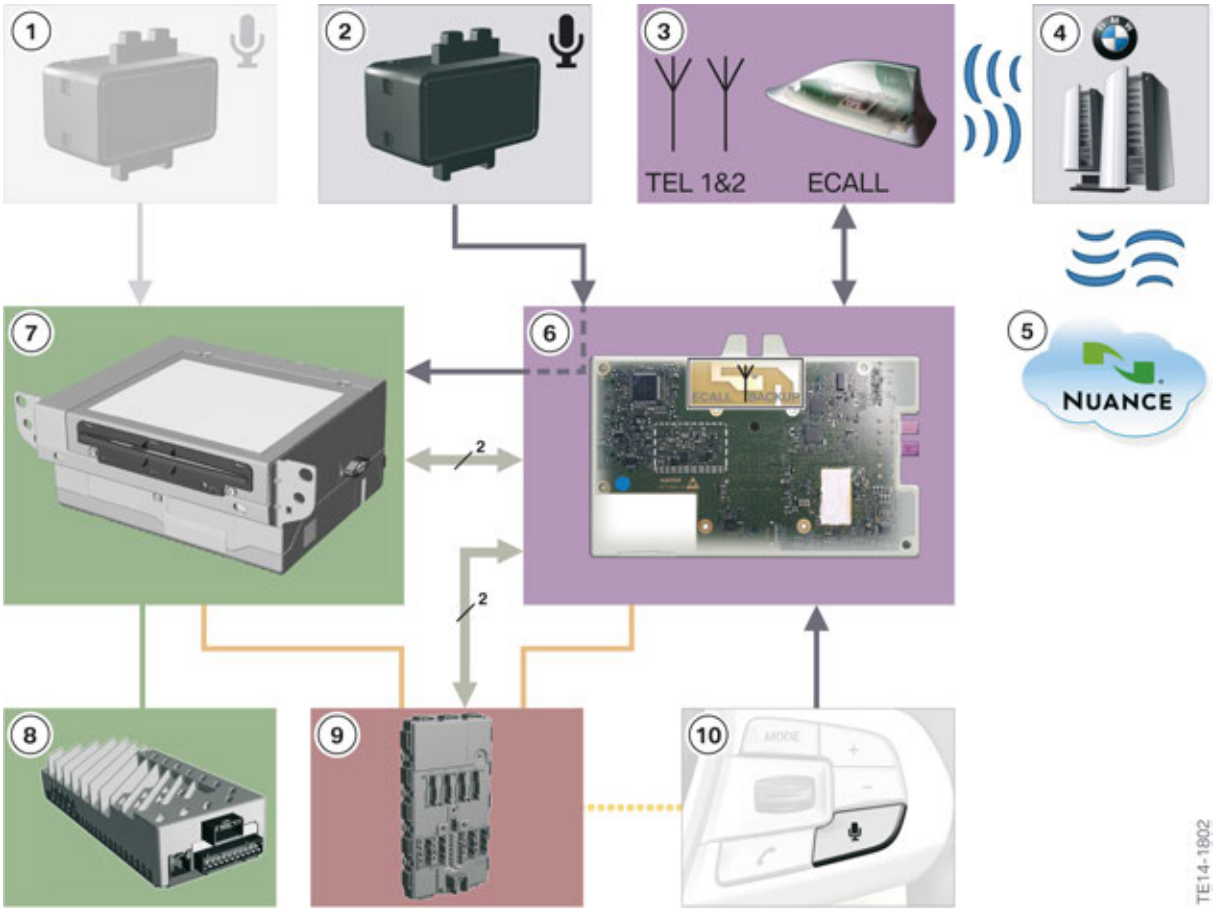

SVS G12

Index	Explanation
1	Microphone, passenger's side (not used for SVS)
2	Microphone, driver's side
3	Telematic antenna and telephone antenna (telematics 2 for LTE)
4	BMW backend server
5	Nuance® language services
6	Reception electronics in the TCB2
7	Head Unit High 2 (HU-H2)
8	Connection to hi-fi system in G12
9	Body Domain Controller (BDC)
10	Push-to-talk button

Bayerische Motorenwerke Aktiengesellschaft
Qualifizierung und Training
Röntgenstraße 7
85716 Unterschleißheim, Germany

Technical training.
Product information.

G12 Telephone and Telematics Systems

Edited for the U.S. market by:
BMW Group University
Technical Training
ST1501 10/1/2015

BMW Service

General information

Symbols used

The following symbol is used in this document to facilitate better comprehension or to draw attention to very important information:

⚠

Contains important safety information and information that needs to be observed strictly in order to guarantee the smooth operation of the system.

Information status and national-market versions

BMW Group vehicles meet the requirements of the highest safety and quality standards. Changes in requirements for environmental protection, customer benefits and design render necessary continuous development of systems and components. Consequently, there may be discrepancies between the contents of this document and the vehicles available in the training course.

This document basically relates to the European version of left hand drive vehicles. Some operating elements or components are arranged differently in right-hand drive vehicles than shown in the graphics in this document. Further differences may arise as the result of the equipment specification in specific markets or countries.

Additional sources of information

Further information on the individual topics can be found in the following:

- Owner's Handbook
- Integrated Service Technical Application.

Contact: conceptinfo@bmw.de

©2015 BMW AG, Munich

Reprints of this publication or its parts require the written approval of BMW AG, Munich

The information contained in this document forms an integral part of the technical training of the BMW Group and is intended for the trainer and participants in the seminar. Refer to the latest relevant information systems of the BMW Group for any changes/additions to the technical data.

Information status: **June 2015**
BV-72/Technical Training

G12 Telephone and Telematics Systems

Contents

1. Introduction **1**

2. Special Equipment **2**
- 2.1. Standard telephone system 2
- 2.2. Wi-Fi Hotspot 5

3. Overview of Telephone Systems **6**
- 3.1. Data bus overview 6
- 3.2. Antenna system in G12 9
- 3.3. Convenient telephone/WCA 10

4. Telematic Communication Box 2 (TCB2) **13**
- 4.1. Comparison with TCB 13
- 4.2. New features of the TCB2 13
- 4.3. System connection 14
- 4.4. Functional wiring diagram of head unit with TCB2 15
- 4.5. Installation location 16
- 4.6. Design of the TCB2 17
  - 4.6.1. Individual components 17
  - 4.6.2. Hardware: roof fin 18
- 4.7. Hardware: TCB2 control unit 19
  - 4.7.1. Front view 19
  - 4.7.2. Rear view 19
  - 4.7.3. Emergency battery 20

5. Telematics Services in the Vehicle **22**
- 5.1. LTE data connection 22
  - 5.1.1. Comparison of data transfer rates 22
  - 5.1.2. Multi Input Multiple Output (MIMO) 22
- 5.2. Emergency call system in the G12 23
  - 5.2.1. Standard equipment 23
  - 5.2.2. Intelligent emergency call 23
- 5.3. ConnectedDrive 25
  - 5.3.1. Precondition 25
  - 5.3.2. ConnectedDrive Services 25

6. Connectivity **27**
- 6.1. Player functions 27
  - 6.1.1. History of player functions 27
- 6.2. Wi-Fi Hotspot 29
  - 6.2.1. Wi-Fi hotspot in the vehicle 29

G12 Telephone and Telematics Systems

Contents

6.3. Wi-Fi-®Direct ... 32
6.3.1. What is Wi-Fi®Direct? ... 32
6.4. Pairing ... 33
6.4.1. Pairing ... 33
6.5. Screencast ... 34
6.5.1. Screencast (mirroring function) ... 34
6.6. Wireless charging ... 35
6.6.1. Definition of wireless charging ... 35
6.6.2. Wireless charging in the G12 ... 36
6.6.3. Basic principle ... 38
6.6.4. Connection to the vehicle electrical system ... 39
6.6.5. Wireless charging hardware ... 40
6.6.6. Line compensator ... 41
6.6.7. Built-in and external WCA charging coils ... 41
6.6.8. Compatible devices ... 42
6.6.9. Status LED and possible incorrect operation ... 44
6.6.10. Forgotten cell phone alert ... 46
6.7. Near Field Communication NFC ... 47
6.7.1. Introduction ... 47
6.7.2. NFC transmitter ... 47
6.7.3. Use at BMW ... 48
6.7.4. NFC basic principle ... 49
6.7.5. NFC receiver ... 50
6.7.6. Installation locations of NFC components ... 51
6.7.7. NFC functions in the vehicle ... 52
6.8. Overview of connectivity ... 53

G12 Telephone and Telematics Systems

1. Introduction

In addition to the hands-free telephone system with a base plate with connection to the exterior antenna a brand new wireless charging telephone feature is standard equipment. Charging takes place wirelessly for the first time using **wireless charging technology** in the new BMW 7 Series.

Another new feature of the G12 is transmission of cell phone data by means of **Near Field Communication or NFC for short**. NFC is used for the first time in a BMW, it offers a simplified connection setup for Bluetooth pairing of the customer's cell phone.

Together with the revised Head Unit High 2, a new telematic control unit is being introduced at BMW. The **Telematic Communication Box 2 (TCB2) as a roof-mounted version** offers the cell radio standard Long Term Evolution (LTE) in the vehicle for the first time. This new feature permits both connection of vehicle such as TeleService and Connected Drive as well as realization of a high-speed access to the internet. This **Wi-Fi hotspot** is available to customers as optional equipment.

G12 Telephone and Telematics Systems

2. Special Equipment

2.1. Standard telephone system

In the G12, the standard equipment again includes the **Bluetooth hands-free system** together with Bluetooth audio streaming and a USB interface. An AUX-In interface is no longer offered in the G12. An exception to this is the separate connection option in the rear seat entertainment system. The hardware for the Bluetooth hands-free system is comprised in the Head Unit High 2.

In current BMW vehicles and depending on the optional equipment, a base plate and phone cradle is provided so that customers can use snap-in adapters in the vehicle. The base plate is located in the front center console of the vehicle. It is used for charging the cell phone and has a USB interface for the music player connection. Connected via the external vehicle antenna, the field strength for the customer's cell phone is significantly improved. Use of the external vehicle antenna is particularly beneficial because it greatly enhances the field strength depending on frequency. The standard equipment telephone system on the US market G12 includes the 6NW Wireless Charging. This base plate and phone cradle is no longer needed as the system uses a wireless charging tray that performs all of the same functions.

A 2nd microphone is installed in the vehicle as standard to enhance the operation of the hands-free system, in particular for the front passenger.

The vehicle equipped with two USB interfaces and there is no longer an AUX-IN port available. Both USB interfaces are connected to the head unit and can be accessed in the new main menu under "Media/Radio".

A charge current of up to 2.1A is available via both USB interfaces to supply the customer's smart devices. This is made possible due to the use of an additional USB hub which is installed as standard. Both audio and video content can be played back from a USB stick via these interfaces.

G12 Telephone and Telematics Systems

2. Special Equipment

USB ports in the G12

G12 Telephone and Telematics Systems

2. Special Equipment

Index	Explanation
1	Additional USB hub in combination with the standard equipment Telephone with wireless charging (SA 6NW)
2	Standard USB interface in the front center console (aluminum design)
3	Optional USB interface in the center console storage compartment **(Not available for US market)**
3a	Additional USB interface in the storage compartment (SA 6NW) Telephone with wireless charging.
3b	Telephone cradle and USB interface in the storage compartment **(Not available for the US market)**

The standard telephone function permits simultaneous connection of 2 telephones. A 3rd cell phone can be used as an external Bluetooth audio source if required. Up to 4 telephones can be registered in advance.

Numerous additional office functions can be additionally enabled in the main menu Communication/ Office in combination with the convenient telephone function. For example, the address book supports contact photos if these are maintained and stored on the cell phone. You can find out whether a specific cell phone is suitable for this feature at:

www.bmw.com/bluetooth

Wi-Fi Hotspot

A **Wi-Fi hotspot** is prepared in the vehicle as a highlight of the convenient telephone function. This can be activated thanks to special optional equipment which is added to the vehicle together with convenient telephone or wireless charging. For further information Wi-Fi Hotspot see chapter 2.

User-initiated software update

A customer-initiated software update (KISU update) for multimedia and telephone is possible as standard in the G12.

Telephone with wireless charging

Telephone with wireless charging (SA 6NW) is offered as standard equipment in the US market (see illustration). The scope of hardware and functions is enhanced with a **special wireless charging tray** which is installed in the vehicle instead of the base plate. This smartphone charging tray, called "wireless charging tray", is fitted on the side of the center console and permits inductive charging as well as inductive coupling with the external vehicle antenna.

In addition to the customer's smartphone, which remains fully functional with respect to the hands-free system during charging, it is also possible to perform wireless charging of the BMW Display key (SA 3DS).

2.2. Wi-Fi Hotspot

The **Wi-Fi Hotspot (SA 6WD)** in the vehicle is also already **standard for the US market and included along with telephone with wireless charging (SA 6NW)**. The system is offered as a free monthly trial.

It is only necessary to purchase a mobile data plan from your cell phone carrier (i.e. AT&T). Depending on local LTE availability and taking into account country-specific restrictions, the customer can then surf in the internet with up to 10 devices with a maximum download rate of 100 Mbit/s.

The purchase of the (pay as you go) plan takes place exclusively via the customer's cell end device (PC, smartphone, tablet etc.). The connection is done via the TCB 2 SIM card. When connecting to the Wi-Fi hotspot the phone will open a landing page (similar to a hotel Wi-Fi connection) to log in. The TCB 2 uses a double connection, one for the BMW ConnectedDrive and telematics functions via the BMW server and the other for the Wi-Fi hotspot via AT&T server.

G12 Telephone and Telematics Systems

3. Overview of Telephone Systems

3.1. Data bus overview

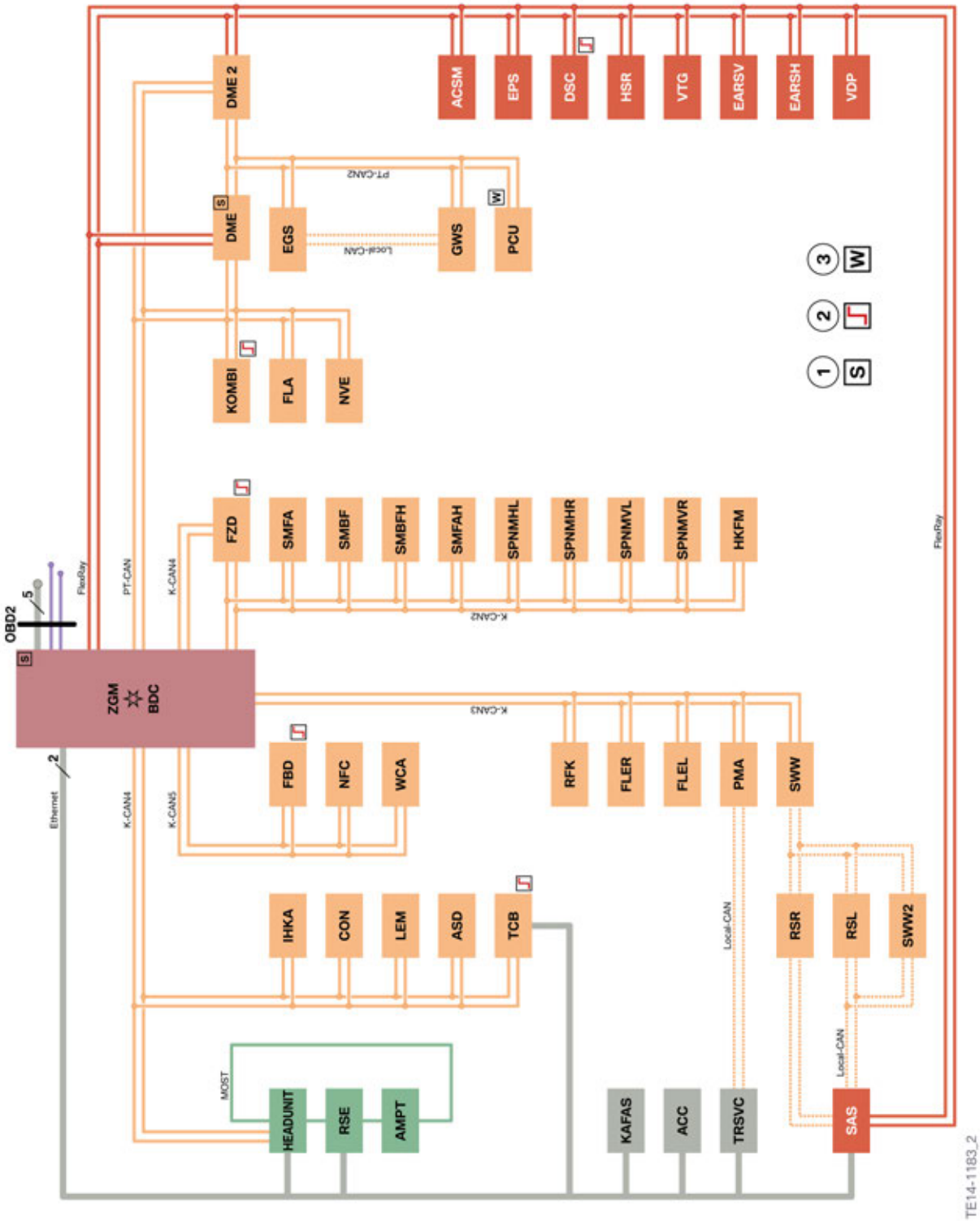

G12 bus overview

G12 Telephone and Telematics Systems

3. Overview of Telephone Systems

Abbreviation	Explanation
ACC	Active cruise control
ACSM	Crash Safety Module
AMPT	Amplifier Top (top high fidelity amplifier)
ASD	Active Sound Design
BDC	Body Domain Controller
CON	Controller
DME	Digital Motor Electronics
DSC	Dynamic Stability Control
EARSH	Electric active roll stabilization rear
EARSV	Electric active roll stabilization front
EGS	Electronic transmission control
EPS	Electromechanical Power Steering
FLA	High-beam assistant
FLER	Frontal Light Electronics Right
FLEL	Frontal Light Electronics Left
FZD	Roof function center
GWS	Gear selector
HEADUNIT	Head Unit High 2
HKA Rear climate control	Automatic rear air-conditioning and heating
HKFM	Tailgate function module
HSR	Rear axle slip angle control
IHKA	Integrated automatic heating / air conditioning
KAFAS	Camera-based driver support systems
KOMBI	Instrument panel
LEM	Light Effect Manager
NFC	Near Field Communication
NVE	Night Vision Electronics
PCU	Power Control Unit
PMA	Parking maneuvering assistant
RFK	Rear view camera
RSE	Rear Seat Entertainment
RSL	Radar Sensor Left (avoidance assistant)
RSR	Radar Sensor Right (avoidance assistant)
SAS	Optional equipment system

Abbreviation	Explanation
SMBF	Seat module, passenger
SMFA	Seat module, driver
SMFAH	Seat module, driver, rear
SPNMHL	Seat pneumatics module back left
SPNMHR	Seat pneumatics module back right
SPNMVL	Seat pneumatics module front left
SPNMVR	Seat pneumatics module front right
SWW	Lane change warning (Primary)
SWW2	Lane change warning (Secondary)
TCB2	Telematic control unit 2
TRSVC	Control unit for rear view camera and SideView
VDP	Vertical Dynamic Platform
VTG	Transfer box
WCA	Wireless charging tray
1	Start-up node control units for starting and synchronizing the FlexRay bus system
2	Control units with wake-up authorization
3	Control units also connected at terminal 15WUP

G12 Telephone and Telematics Systems

3. Overview of Telephone Systems

3.2. Antenna system in G12

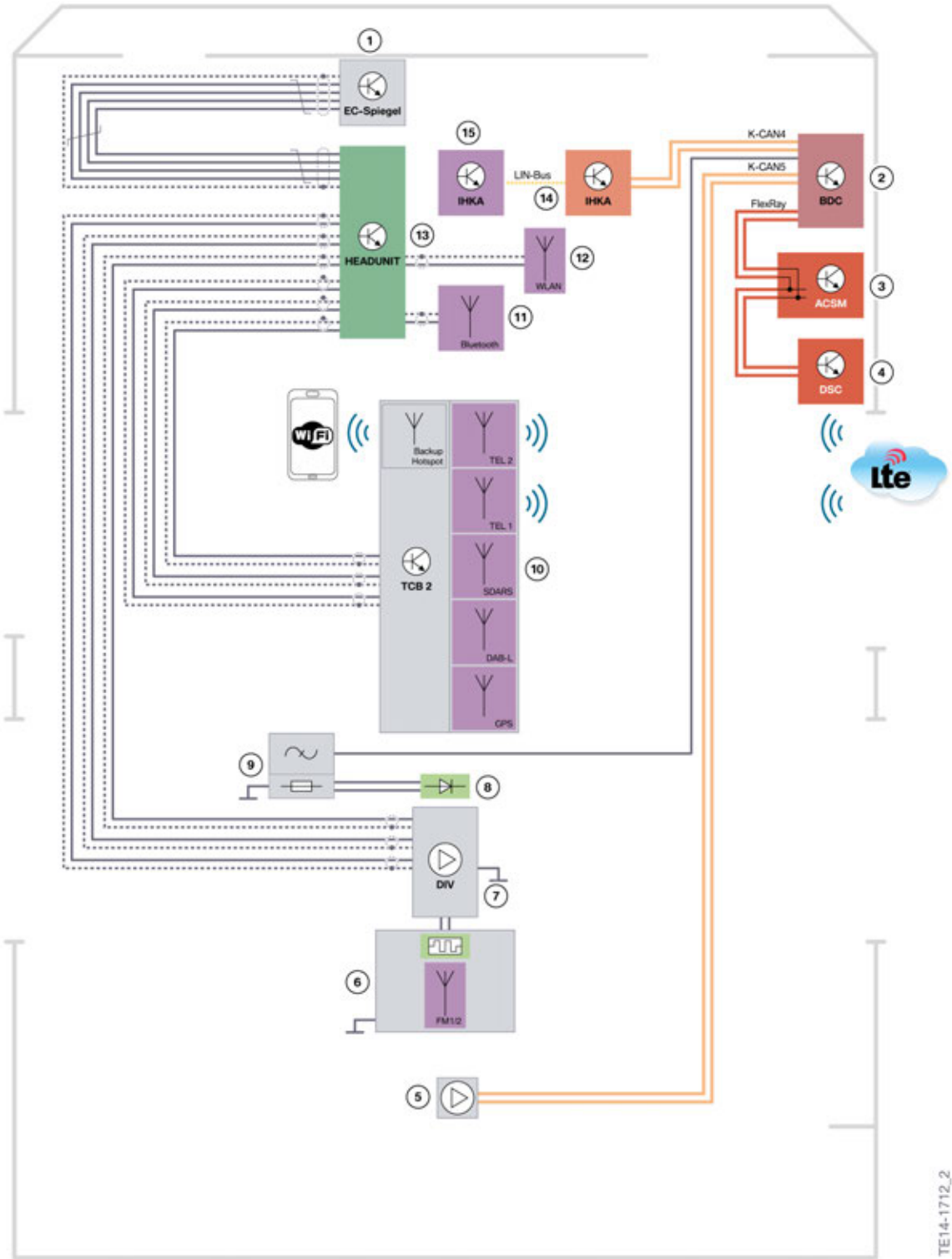

G12 antenna system

G12 Telephone and Telematics Systems

3. Overview of Telephone Systems

Index	Explanation
1	Electrochromatic mirror
2	Body Domain Controller (BDC)
3	Crash Safety Module (ACSM)
4	Dynamic Stability Control (DSC)
5	Remote control service receiver (FBD) (with K-CAN connection for first time)
6	Rear window heating and antennas (FM/AM and FM2)
7	Rear window diversity and antenna amplifier (FM/AM and FM2)
8	Additional brake light
9	E-filter against interference from additional brake light
10	Antenna system + control unit TCB2 for convenient telephone (SA 6NS) or Telephone with Wireless Charging (SA 6NW); snap-in roof-mounted antenna in the fin with SDARS (US), TEL1 (telephone), TEL2 (telematics) and GPS
11	Bluetooth antenna connected to the Head Unit High 2
12	Wi-Fi®Direct antenna connected to the Head Unit High 2
13	Head Unit High 2
14	Integrated automatic heating / air conditioning (IHKA)
15	IHKA control panel

3.3. Convenient telephone/WCA

Wireless Charging (SA 6NW) (WCA) includes Convenient telephone (SA 6NS) and is standard equipment in the US market.

G12 Telephone and Telematics Systems

3. Overview of Telephone Systems

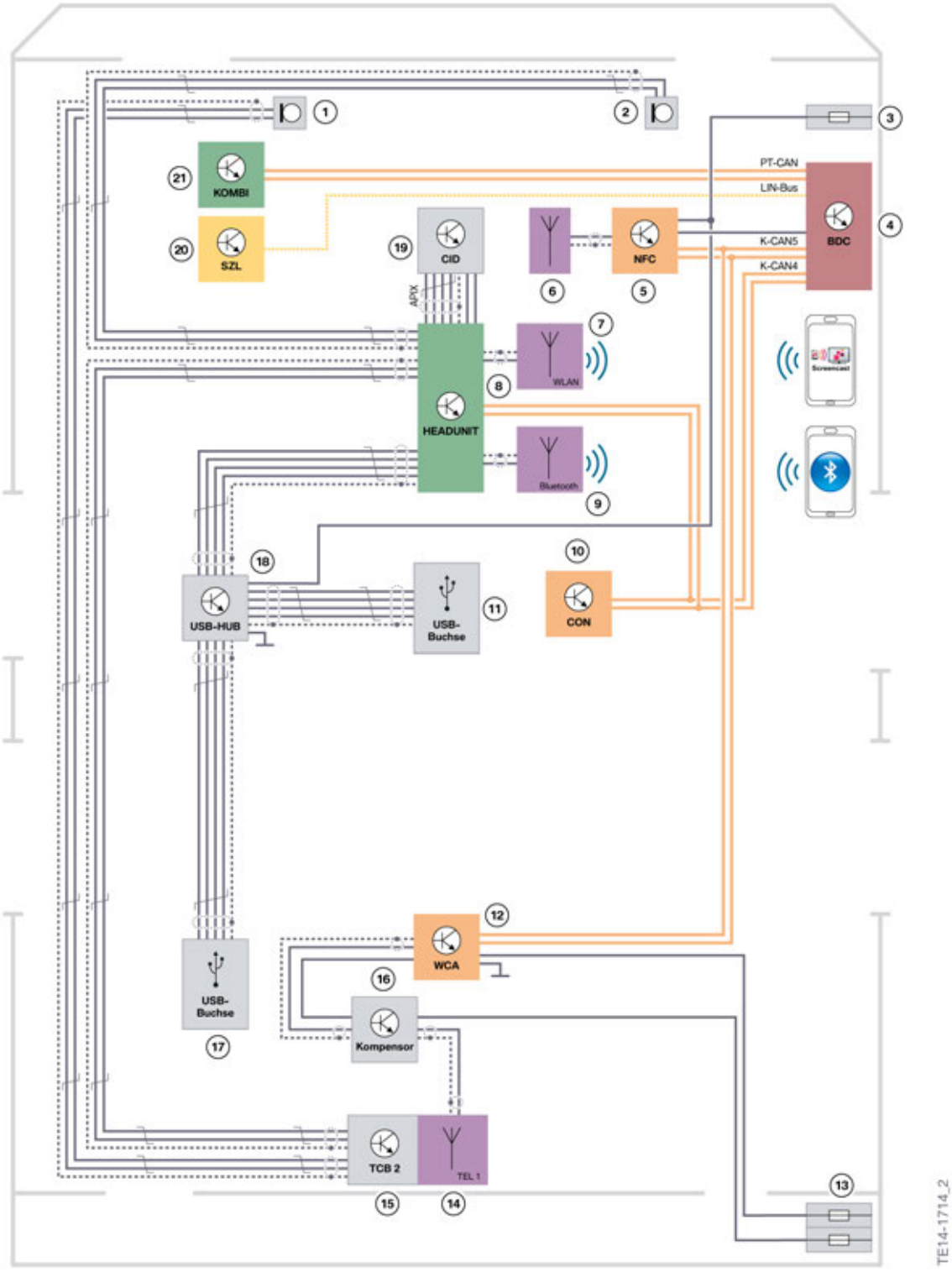

Convenient telephone is included with wireless charging tray WCA (SA 6NW) in the G12.

G12 Telephone and Telematics Systems

3. Overview of Telephone Systems

Index	Explanation
1	Microphone, driver's side
2	Microphone, passenger's side
3	Power distribution box, front
4	Body Domain Controller (BDC)
5	Control unit, Near Field Communication
6	Antenna, Near Field Communication
7	Wi-Fi®Direct antenna on the head unit
8	Head Unit High 2
9	Bluetooth antenna
10	Controller (CON)
11	USB interface (standard)
12	Wireless charging tray
13	Power distribution box, rear
14	Telephone antenna
15	TCB2 with integrated fin (TEL1 for WCA and base plate, integrated Wi-Fi hotspot)
16	WCA line compensator
17	Additional USB interface in the center console
18	USB hub
19	Central Information Display (CID)
20	Steering column switch cluster (SZL)
21	Instrument panel (KOMBI)

G12 Telephone and Telematics Systems

4. Telematic Communication Box 2 (TCB2)

4.1. Comparison with TCB

The tasks of the Telematic Communication Box (telematic control unit installed since 07/12) were clearly defined up to now. The TCB was the modem in the vehicle with integrated SIM card and emergency running properties in the event of failure of the vehicle electrical system (emergency power supply with own battery). Both TeleServices and the ConnectedDrive services (ASSIST, ONLINE, Remote and Internet) use this modem with connected telematic antenna in the roof fin. The emergency GSM antenna was a separate component and was hard-wired to the TCB, in addition to a microphone and an emergency loudspeaker.

4.2. New features of the TCB2

From the F23 on, the TCB2 **as a luggage compartment version** which uses both antennas for reception of the data services (LTE) for the first time with combined operation of the telematic antenna and a separate emergency antenna (backup)

The **roof-mounted version** of the TCB2 was introduced with the F30 LCI. It is the next evolutionary phase of the TCB2 and now also makes its debut in the new BMW 7 Series. **Two** integrated telematic antennas (TEL1 and TEL2) ensure first-class LTE data reception. The integrated emergency GSM antenna (backup) now also serves simultaneously as a "hub" for the Wi-Fi hotspot in the vehicle. The US version includes the 4G + Wi-Fi hotspot (SA 6WD) feature as standard equipment and it uses an AT&T® SIM card as the previous TCB.

G12 Telephone and Telematics Systems

4. Telematic Communication Box 2 (TCB2)

4.3. System connection

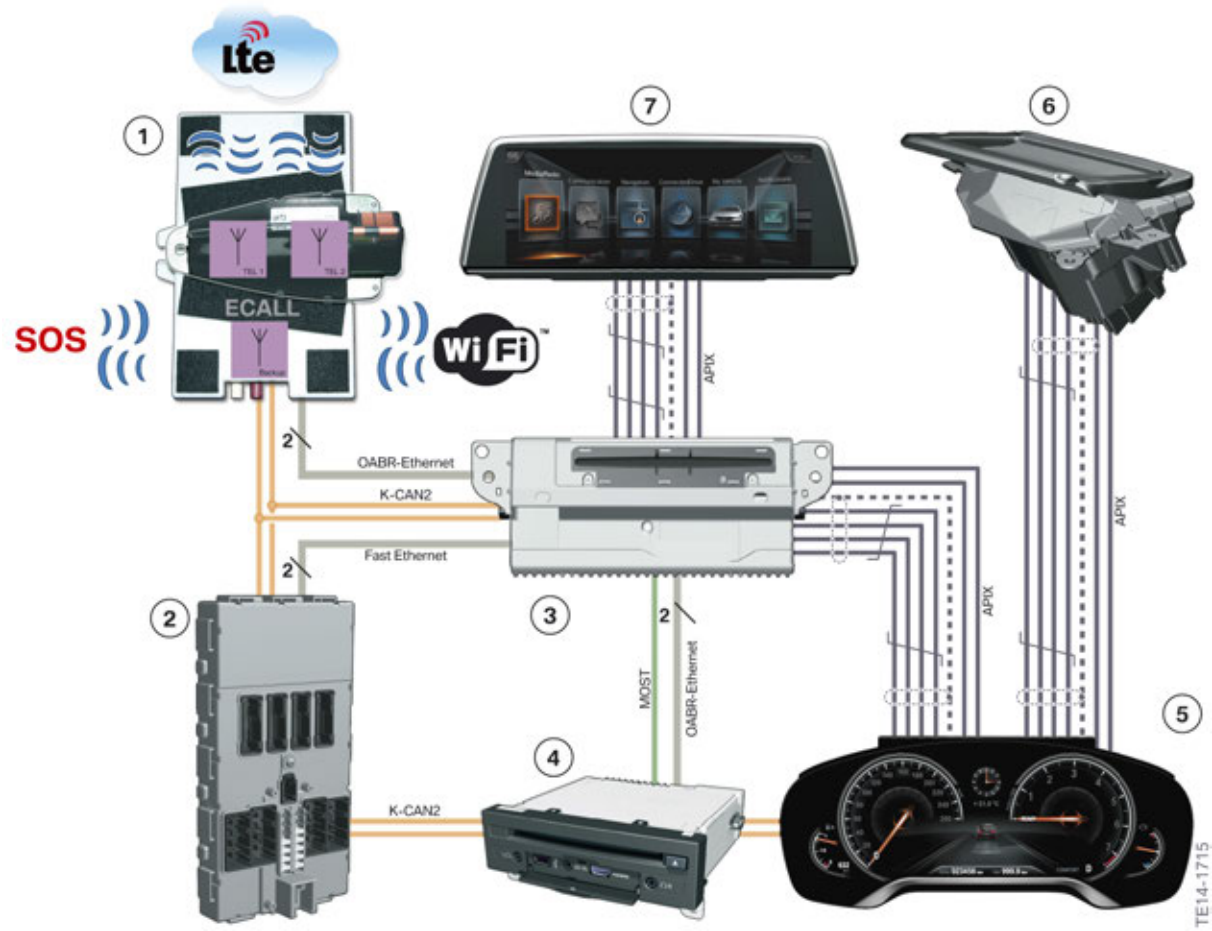

Vehicle electrical system connection TCB2 in the G12

Index	Explanation
1	Combination of TCB2 (includes emergency call antenna) and fin with telephone (TEL1) and telematic antenna (TEL2) for emergency call function, remote services, TeleServices and ConnectedDrive services
2	Body Domain Controller (BDC)
3	Head Unit High 2
4	Control unit for rear seat entertainment system (RSE)
5	Instrument panel (KOMBI)
6	Head-Up Display (HUD)
7	Central Information Display (CID)

G12 Telephone and Telematics Systems

4. Telematic Communication Box 2 (TCB2)

4.4. Functional wiring diagram of head unit with TCB2

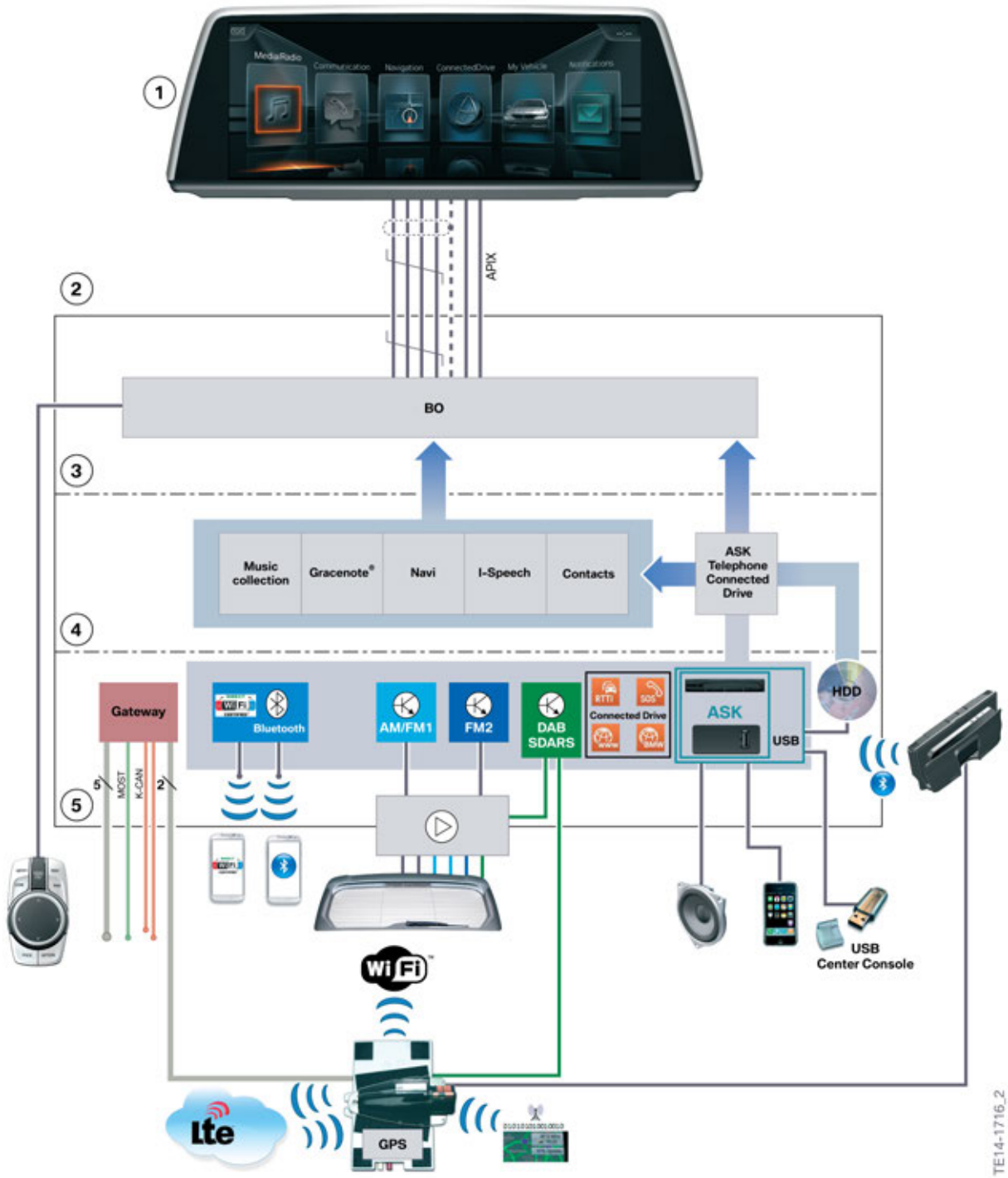

Functional wiring diagram of HU-H2 including TCB2

Index	Explanation
1	Central Information Display (CID)
2	Head Unit High 2
3	User interface
4	Application/software
5	Interfaces/Hardware connection

4.5. Installation location

The TCB2 with associated roof fin (roof-mounted antenna) is located just in front of the rear window between the roof and roofliner of the G12.

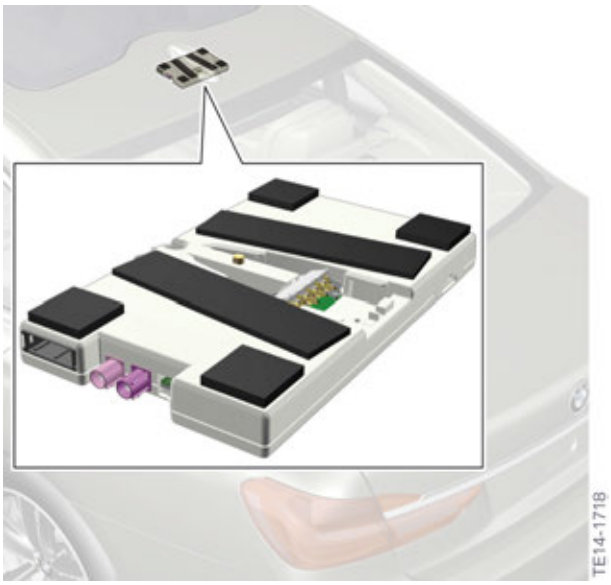

TCB2 installation location including the roof fin in the G12

4.6. Design of the TCB2

4.6.1. Individual components

The TCB2 is engaged in the roof-mounted antenna connected with the vehicle. This makes it possible to reduce conduction losses and EMC interference.

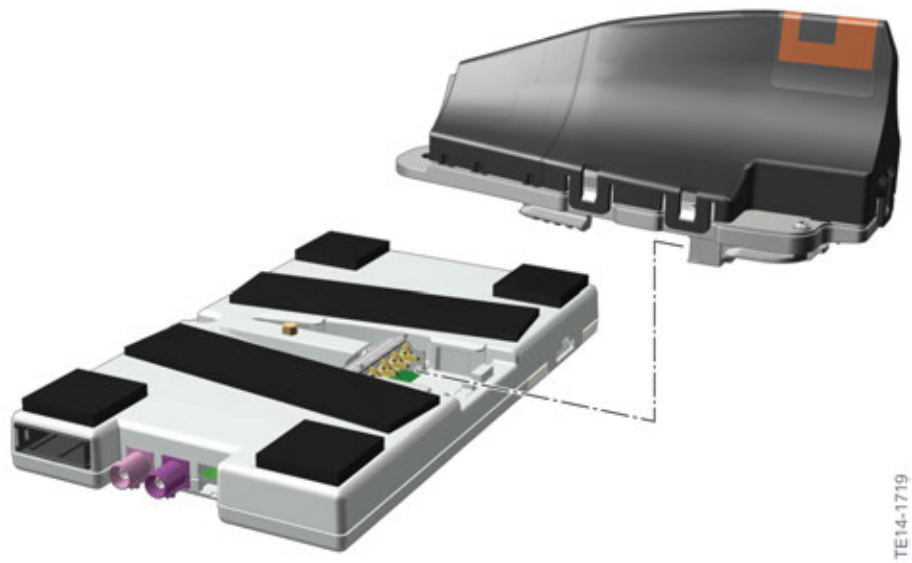

Individual components of TCB2

Index	Explanation
1	Telematic antenna fin **as standard** with: TEL1 (telephone and telematics for LTE) and TEL2 (telematic) antenna and GPS antenna in the roof fin; SDARS antenna (for US vehicles).
2	Bottom part of the TCB2 with integrated emergency call antenna and additional integrated "Hub" for the Wi-Fi hotspot (SA 6WD) in combination with convenient telephone and wireless charging (SA 6NW).

4.6.2. Hardware: roof fin

In the roof-mounted version, the TCB2 control unit is installed directly into the **roof-mounted (fin) antenna** during installation at the assembly plant. The antenna contacts of the roof fin are connected with the connection points in the TCB2 control units with the minimum possible electrical resistance. The contacts are gold-plated and have short travels since they are combined into one component at the assembly plant by the engagement process.

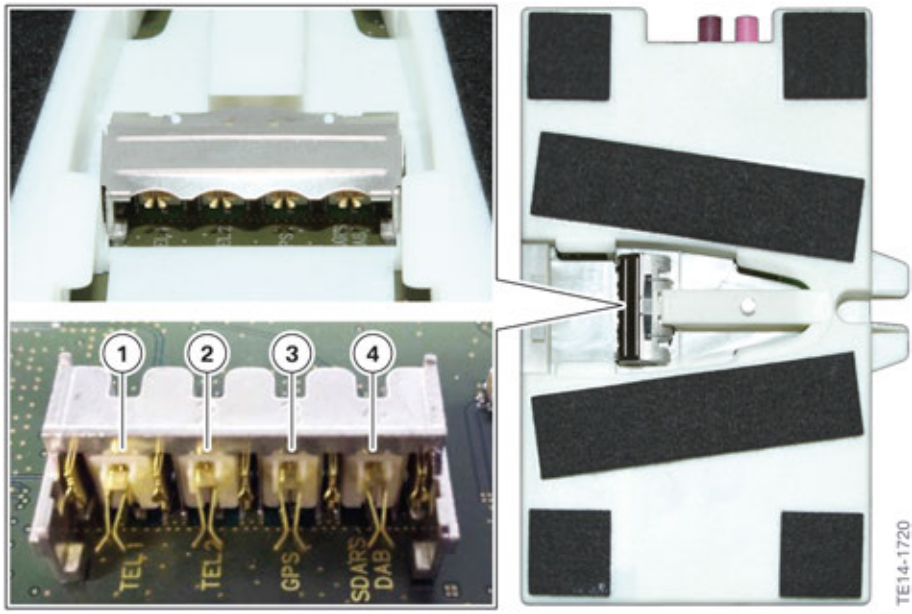

Illustration of pinning on TCB2

Index	Explanation
1	TEL1 connection for the telephone antenna (+ LTE telematics function)
2	TEL2 for the telematic antenna (ECall, MIMO and Wi-Fi hotspot)
3	GPS antenna (optional)
4	SDARS (standard for US)

4.7. Hardware: TCB2 control unit

4.7.1. Front view

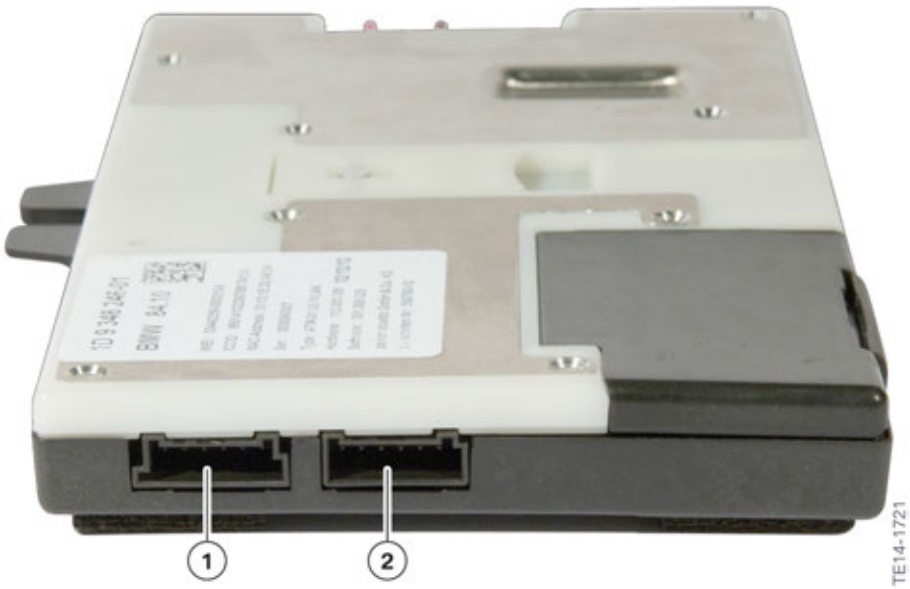

Front view of the TCB2

Index	Explanation
1	LED emergency call button, emergency call button, crash signal ACSM, K-CAN4
2	Emergency loudspeaker, telematic control unit (terminal 30F, ground)

4.7.2. Rear view

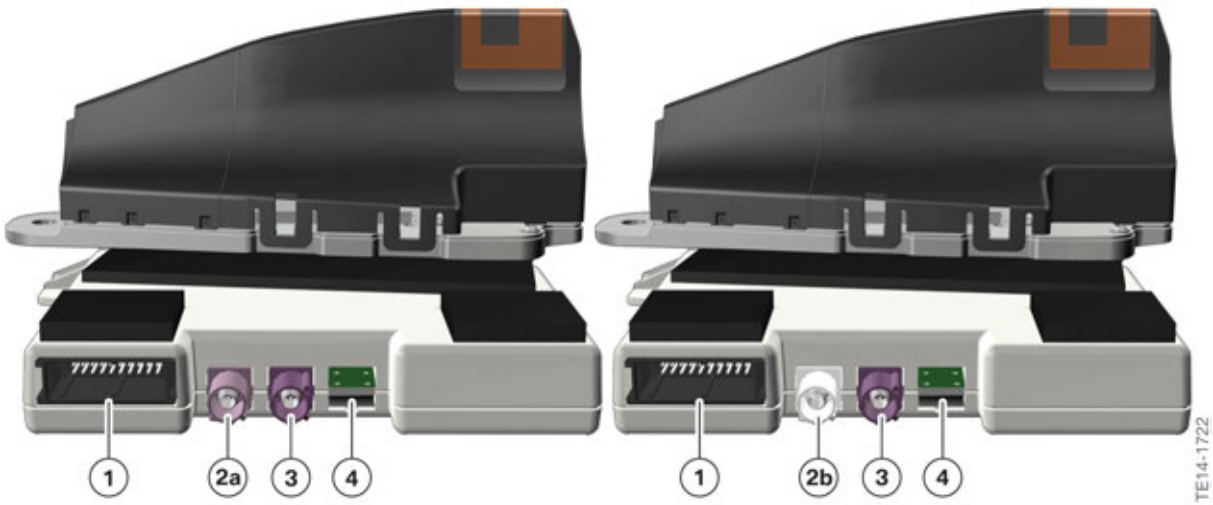

Rear view of the TCB2

Index	Explanation
1	OABR Ethernet, K-CAN4, driver's microphone (input and output)
2a	DAB L band antenna (not for US)
2b	SDARS antenna (US only)
3	TEL1 connection to base plate or wireless charging unit
4	Empty – no functionality

4.7.3. Emergency battery

The TCB2 is equipped with an emergency battery for power supply if the vehicle electrical system is no longer functional. This ensures that the E-CALL system is still supplied with power. The emergency battery can be ordered separately from BMW Parts and Accessories.

If the TCB2 is replaced in the event of a fault, the replacement device will not have an emergency battery! The parts technician must order this emergency battery separately. This emergency battery must be retrofitted in the TCB2 prior to replacement.

If an emergency battery develops a fault during the vehicle life cycle, the battery can be replaced. After removing the roofliner, the TCB2 can be separated from the antenna unit bonded into position in the vehicle roof by means of a release button located on the bottom of the control unit.

G12 Telephone and Telematics Systems

4. Telematic Communication Box 2 (TCB2)

A Check Control message will be displayed to the driver if the emergency battery is defective. Please observe the repair instructions for removal of the roofliner when servicing the emergency battery of the TCB2!

Release button on the TCB2

Please refer to the BMW repair instructions for the exact replacement procedure for the emergency battery.

G12 Telephone and Telematics Systems

5. Telematics Services in the Vehicle

5.1. LTE data connection

5.1.1. Comparison of data transfer rates

Comparison of mobile radio data transfer rates

Long Term Evolution (LTE) is a 4th generation (4G) mobile radio standard. LTE can achieve a significantly higher download rate with up to 100 MBit/s. The basic diagram of UMTS is retained for LTE. A quick and reasonable changeover of the infrastructures of the UMTS technology (3G standard) to LTE Advanced (4G standard) is therefore possible.

The frequency ranges used differ depending on the region, and vary from about 700 to 2600 MHz. The term "Frequency Division Duplex" is understood as transmission and receiving from cell and base stations on tow different frequency bands: The mobile device transmits, in the Uplink channel, while the base station transmits, in the Downlink channel. Each of the two frequency ranges have a bandwidth of 5 MHz. Expressed simply, this means that 2 transmitters and 2 receivers in each case transmit and receive simultaneously with 2 different frequencies.

5.1.2. Multi Input Multiple Output (MIMO)

With MIMO technology (Multiple Input Multiple Output), it is possible for mobile radio providers to offer data speeds with a low error rate. MIMO is the basis for a special encoding procedure which uses both temporal and also spatial dimensions for information transfer (Space-Time Coding).

As a result, the quality (bit error frequency) and data rate of a wireless connection can be improved significantly. MIMO systems can transmit considerably more Bit/s per Hz bandwidth used, and are thus more efficient than conventional systems. In order to realize the MIMO technology at BMW **both data antennas** present in the vehicle area used simultaneously for the first time for the LTE connection. MIMO operates similar to the antenna diversity in the radio system. The signal of both antennas is sent, evaluated and combined to minimize errors and optimize data speed.

G12 Telephone and Telematics Systems

5. Telematics Services in the Vehicle

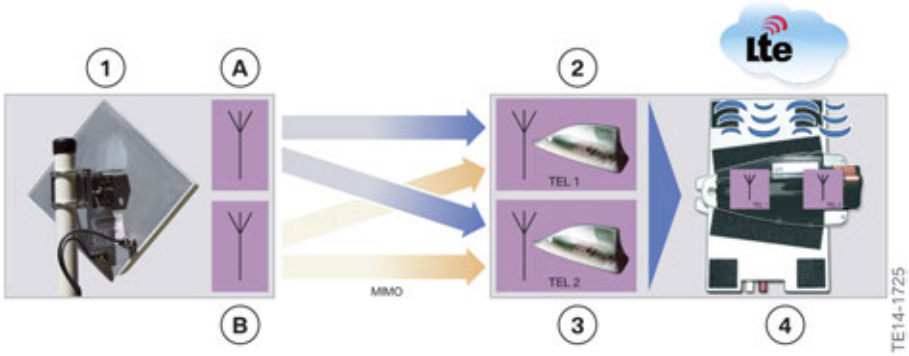

LTE reception in the G12

Index	Explanation
1	LTE transmitter system
A	LTE antenna 1
B	LTE antenna 2
2	Telephone antenna TEL1 for LTE reception
3	Telematic antenna TEL2 for LTE reception
4	Combination of LTE antennas 1 and 2. Consisting of the TEL1 and TEL2 antennas of the roof fin engaged in the TCB2

5.2. Emergency call system in the G12

5.2.1. Standard equipment

The G12 is equipped as standard with a manual emergency call in combination with an emergency call button and an emergency call antenna. Regular communication in the event of an emergency takes place via the SIM card in the TCB2 in combination with the telematic antenna.

5.2.2. Intelligent emergency call

The **Intelligent emergency call** (SA 6AC) is standard in the US market. It offers an extension of the standard emergency call equipment. The telematics service "Intelligent emergency call" sets up a connection to emergency and rescue services via a **BMW Call Center** if necessary in the case of manual and automatic emergency calls. In addition to the current position of the vehicle, additional data is transmitted about the accident severity, for example.

G12 Telephone and Telematics Systems

5. Telematics Services in the Vehicle

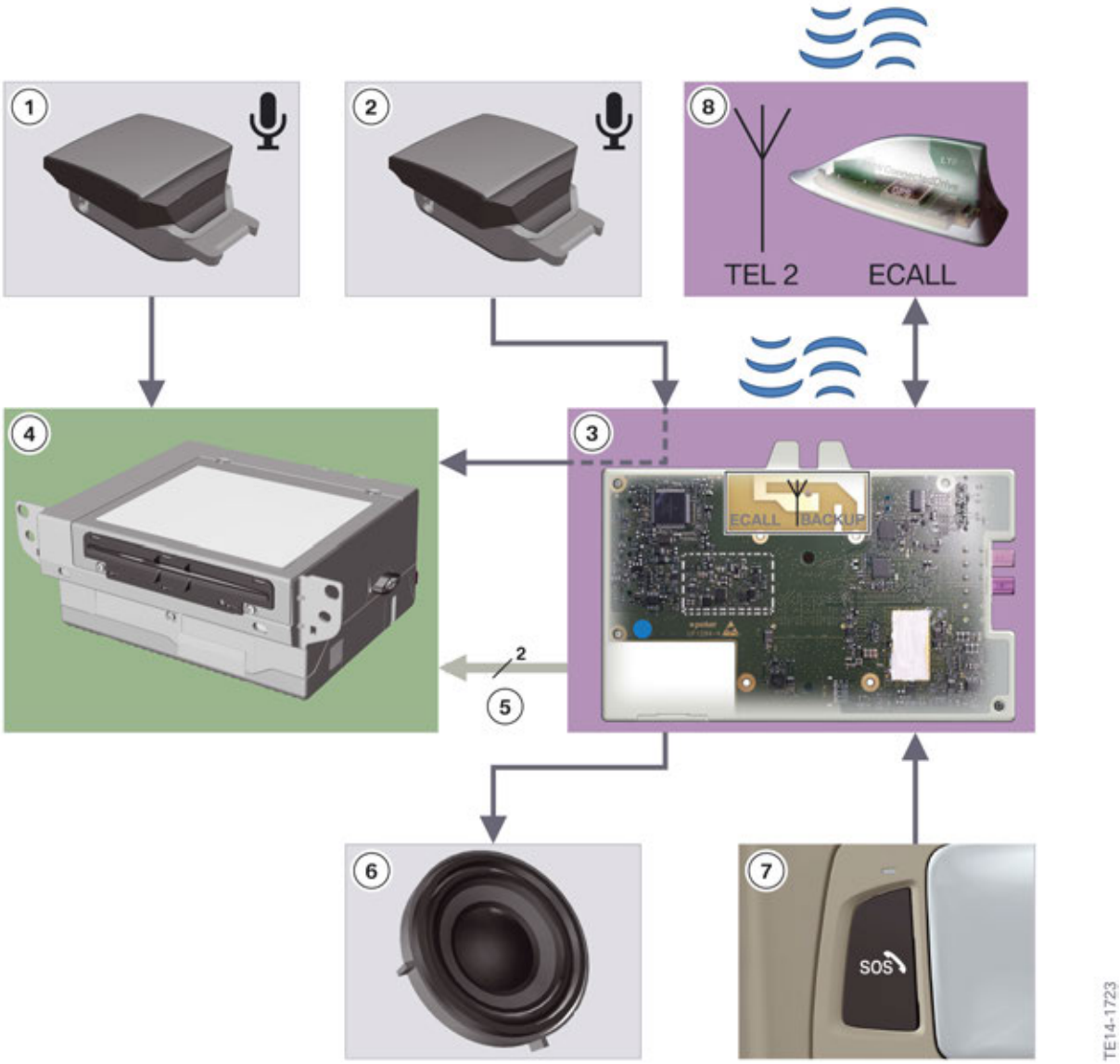

Emergency call system in the G12

Index	Explanation
1	Microphone, passenger's side (Not for US)
2	Microphone, driver's side
3	TCB2 including integrated emergency call antenna
4	Head Unit High 2
5	OABR Ethernet
6	Emergency loudspeaker
7	Emergency call button
8	Telematic antenna (LTE2) in the roof fin

5.3. ConnectedDrive

5.3.1. Precondition

The basic prerequisite for the functionality of the ConnectedDrive services is already present as hardware in every G12. The **permanently installed SIM card an telematic control unit** (Telematic Communication Box 2) with roof fin are included in the basic equipment. The roof fin contains the telematic antenna for the telematic system.

5.3.2. ConnectedDrive Services

The complete hardware required to receive the ConnectedDrive services is therefore available. The ConnectedDrive services can be booked in the vehicle via the ConnectedDrive Store:

The **basic services** include:

1. ConnectedDrive Services (SA 6AK) with the following content:

Vehicle Apps or BMW Online services

- BMW Online news
- BMW Online country information
- BMW Online gasoline price search
- BMW Online Office Mail
- BMW Online weather
- BMW Online search
- BMW ConnectedDrive Store

Remote services and Apps (BMW Connected & third-party providers)

2. Intelligent emergency call (SA 6AC)

⚠

You can find details on the intelligent emergency call function in Chapter 5.2 of this information bulletin!

TeleServices (SA 6AE) is standard equipment for the US market.

The following **ConncetedDrive services** are standard for the US market but can also be booked via the Connected Drive Store in the vehicle:

Equipment	Optional equipment	Function	Required basic equipment
Real Time Traffic Information	6AM	Traffic information via P-SIM*	Option 6AK
Concierge Service	6AN	Information service via P-SIM*	Option 6AK
Remote Services	6AP	Remote control functions via PC or smartphone	Option 6AK
Internet	6AR	Internet access via a secure BMW server (backend)	SA 6AK; SA 601/609
Apps	(6NR) already included with 6AK.	Applications on the smartphone that permit additional functions in the vehicle (web radio, navigation, music streaming services, etc.) in combination with the head unit.	Option 6AK

*P-SIM=Prefit SIM=the SIM card permanently installed in the vehicle.

G12 Telephone and Telematics Systems

6. Connectivity

6.1. Player functions

6.1.1. History of player functions

Since an interface (AUX-In) for music for **external audio components (external devices)** was offered for the first time as standard at BMW in the 3 Series BMW (E90), the number of these interfaces has increased significantly over the course of the years. A quantum leap took place in 2007 when the introduction of the ULF-SBX-High meant that it was possible for the first time to feed external audio into the vehicle via a USB interface and to connect an iPod as a music player.

The first Bluetooth audio streaming and the first application function on a smartphone (Apps) were also realized via a telephone control unit, the Combox multimedia.

Alongside the familiar cable-connected solutions (wired, one-wire, two-wire, etc.), an increasing number of wireless solutions are being used in vehicles. A list of **all external interfaces** that have been implemented in BMW vehicles so far is provided below.

Feature	Interface (head unit)	Use/ vehicle	Optional equipment code
AUX-IN port for MP3 player	Radio or head unit	09/2005 (E90)	Depending on the radio or head unit (e.g. Radio Professional SA 663)
USB (audio only)	USB audio interface; ULF-SBX High via MOST to the head unit	11/2006 (E70)	Option 6FL
Music collection (music server on the HDD in the head unit)	Installed hard disk drive (HDD) in the CIC with USB port for data backup	011/2008 (E82, E90)	SA 609 (Navigation with CIC)
Smartphone connection (extended connection of a music player in the cell phone)	Base plate with built-in USB interface (gold contacts) connected with ULF-SBX-High via a USB hub	11/2008 (F01)	Option 6NF
Bluetooth audio streaming	Wireless via Bluetooth connection to COMBOX. The information is forwarded to the head unit via MOST.	09/2010 (F01)	Option 639
APPS (iPhone®)	Applications on the iPhone, which interact with the head unit via the USB audio interface and via the COMBOX	03/2011 (E8x, E9x)	Option 6NR

G12 Telephone and Telematics Systems

6. Connectivity

Feature	Interface (head unit)	Use/ vehicle	Optional equipment code
iPhone® Video + Plugin	USB audio interface with additional video line (CVBS) in the base plate; plugin was Apple® Look&Feel in a BMW	03/2011–03/2013 (E8x, E9x)	SA 633; SA 6NF
USB (video stream of video files to the head unit)	USB audio interface to the head unit	07/2012 (F01 LCI)	SA 609; SA 6NF
Packages 6NH, 6NK, 6NL	Integration of Bluetooth audio streaming, USB audio interface and smartphone connection of the base plate into the various Connectivity optional equipment.	03/2013 (F10 LCI)	SA 6NH (with SA 6FL), SA 6NK (with SA 6FL and SA 6NF), SA 6NL (with SA 6FL and SA 6NF); SA 644 and SA 633 were replaced
APPS (Android)	Applications on the Android smartphone are transmitted to the head unit and interact with this via the USB audio interface. 2 modes (USB and Accessories Mode)	09/2013 (F10 LCI)	Option 6NR

Whereas functions were previously explained with the individual technical devices, a new approach is now necessary with the G12.

Due to the fact that the above list of functions has again been significantly extended for the G12, the **individual functions** would not receive adequate coverage if an explanation were to be provided in the same way as before (functions assigned to and subordinate to technical devices). The clarity of the explanation would be completely lost.

For this reason, we will go back to the customer and his needs. We will now consider the desired media from the point of view of the customer and will show the various options available to the customer so that he can achieve his goal directly. (For example, the customer would like to play back music via a smartphone in the snap-in adapter).

In addition, it must be noted that the interface functionality of the Combox was already ended in 2012 with integration in the Head Unit High.

Since the player functions, irrespective of whether external or internal, now take place in or with the head unit, you will find **a list of all options** available to the customer to play **audio, pictures video or apps** in the information bulletin “G12 Audio system".

G12 Telephone and Telematics Systems

6. Connectivity

6.2. Wi-Fi Hotspot

6.2.1. Wi-Fi hotspot in the vehicle

The G12 is equipped with **numerous Wi-Fi links**. All vehicle-related services and functions are controlled via the **Vehicle Wi-Fi** (Wi-Fi®Direct).

Wi-Fi®Direct symbol

The **Wi-Fi Hotspot (SA 6WD) is standard equipment in the US market.** This feature provides the customer easy access to the internet. The term "Wi-Fi" is commonly used instead of WLAN. That is why the term Wi-Fi with the corresponding logo is often used in combination with the WLAN hotspot.

Wi-Fi symbol for a certified Wi-Fi hotspot

The hotspot is a multi-point connection similar to a home network. The hotspot performs the task of a "hub", as familiar from network technology. The customer can connect up to 10 devices to the hotspot (hub) and surf on the internet with a maximum download speed of 100 Mbit/s. A "Client to Client" connection is **not** possible. In other words, the devices cannot communicate with each other.
In network terms, this means that the "hub" does not have a "bridge" function.

The hardware in the vehicle for the hotspot is coupled to the optional equipment **wireless charging (SA 6NW)** which includes convenient telephone (SA 6NS).

The hotspot function can be used by the customer in combination with an existing or additional cell data plan. The customer must **independently** extend the data plan with the provider in the Europe and US versions. The procedure is similar to that for booking hotspot access in a hotel or a public hotspot in a café. After the data connection is set up between the end device (smartphone, tablet PC, etc.) and the hotspot, a provider page will be displayed where the customer can independently extend the data contract.

If the booking is successful, a connection will be set up to the free, unfiltered internet via the MIMO-LTE data connection in the **TCB2**. TEL1 and TEL2 in the roof antenna/roof fin are defined as telematic antennas for reception, as described in Chapter 5.

G12 Telephone and Telematics Systems

6. Connectivity

Data graphic of hotspot in the G12

The **hotspot** allows the customer easy access to the internet for his smart devices (smartphones, tablets, PC, etc.) and also permits internet access with the Touch Command tablet available for the Rear Seat Entertainment.

For the first time at BMW, the GSM emergency antenna (BACKUP or ECALL antenna) integrated in the TCB2 is used as the hotspot antenna for the hotspot in the entire vehicle interior.

G12 Telephone and Telematics Systems

6. Connectivity

Wi-Fi hotspot in the G12

The driver's position was intentionally not shown here as a Wi-Fi reception position. **When the vehicle is stationary**, the driver can of course also access the hotspot via a mobile end device (cell phone, tablet).

Alternative internet access options in the G12

There are therefore 2 options available in the G12 vehicles to access the internet.

The first possibility is the **Wi-Fi hotspot via a connected cell phone** in combination with a customer SIM card with active data plan. Further details were previously described above.

The 2nd possibility for internet access is via the iDrive in the vehicle and coupled to the ConnectedDrive **"Internet" (SA6AR) which is offered free for one month trial period in the US market G12**. After the introductory phase (one month free trial), the customer can order the "Internet" (SA6AR) service via the ConnectedDrive store (for example). With this function a connection to the "filtered internet" is set up via a BMW server (backend) for the system operated via the iDrive system. The Central Information Display or rear compartment display is used as a display here. The data is transmitted into the vehicle via this server in combination with TCB2 and the permanently installed SIM card.

6.3. Wi-Fi-®Direct

6.3.1. What is Wi-Fi®Direct?

A new Wi-Fi standard is integrated in the vehicle for control and monitoring functions mainly by the rear seat entertainment “Command Tablet” and it is also used for the Screencast feature (see below for more information). This **“Vehicle Wi-Fi”** is a certified standard of the Wi-Fi® Alliance which is called **Wi-Fi®Direct**. Please visit the link below for further information.

http://www.wi-fi.org

Wi-Fi® Direct is a standard for wireless data transmission between two WLAN end devices **without** central Access Point. It is based on the international standard IEEE 802.11 (ISO/IEC 8802-11), which describes the properties of a wireless network.

In the G12, this data transmission always takes place by means of Wi-Fi® Direct between the head unit (with connected WLAN antenna) and the following end devices:

- Between the head unit and smartphone for the “Screencast” function (see next chapter in this training manual)
- Between head unit and Touch Command for the control and monitoring functions via tablet PC (see the “G12 Rear seat entertainment" training manual for more information.

Wi-Fi®Direct (Vehicle Wi-Fi) streaming sources in the G12

6.4. Pairing

6.4.1. Pairing

Whereas it was previously possible in BMW vehicles to set up only Bluetooth connections for a hands-free system, Office functions or Bluetooth audio streaming, this is now extended to include 2 additional services. These are Wi-Fi® Direct in the vehicle **"Vehicle Wi-Fi"** and the Wi-Fi hotspot in the vehicle **"Internet hotspot"**.

Two examples are provided below of how the customer can activate the functions Wi-Fi® Direct (Vehicle Wi-Fi) and the Wi-Fi hotspot (Internet hotspot) and then connect a device with them.

Setting and setup of Wi-Fi®Direct (Wi-Fi services in the vehicle).

Index	Explanation
1	"Settings" submenu
Wi-Fi® Direct (Vehicle Wi-Fi)	
2a	Vehicle Wi-Fi active/inactive
2b	Screencast selection
2c	Selection of streaming device for Screencast
2d	Illustration of the Screencast function
Wi-Fi hotspot (Internet hotspot)	
3a	Internet Wi-Fi active/inactive
3b	Selection of Internet hotspot
3c	Illustration of the set Wi-Fi hotspot "Hotspot name" and "Hotspot key"
3d	Selection of the Wi-Fi hotspot in the vehicle on a smartphone

6.5. Screencast

6.5.1. Screencast (mirroring function)

Screencast is an open standard for connecting two computers with each other by means of a wireless connection. In the case of the G12, this function shares or “mirrors” the screen content of a smartphone or tablet with the head unit. The content is displayed in the vehicle on the Central Information Display. Wi-Fi®Direct is used as the data transmission standard in the G12 Wi-Fi®Direct.

If a rear seat entertainment system is installed, the content can also be projected onto the two rear compartment displays via the head unit and RSE control unit if the customer wishes.

Speedlock

Image files, music files and films can be played back as content with the Screencast function. However, the content on the CID is suppressed at a vehicle speed of more than **7 km/h** (5 mph). The content remains visible on the rear compartment displays at speeds above 7 km/h (5mph).

Since the head unit **cannot** detect what screen content is streamed to the vehicle via Screencast, the above-described speedlock is always activated at a speed of 7 km/h. This applies irrespective of whether a film with moving pictures, a music track or photos or screen content are displayed. Music and audio playback are not affected by the Screencast speedlock.

Screencast in the G12

6.6. Wireless charging

6.6.1. Definition of wireless charging

Telephone with wireless charging (SA 6NW) is an innovation for BMW vehicles. In the new BMW 7 Series, charging of telephones takes place wirelessly for the first time using **wireless charging technology**. There is the so-called "Qi®" symbol for wireless charging products. The Chinese word for life energy is a copyrighted standard of the Wireless Power Consortium.

http://www.wirelesspowerconsortium.com/

This standard is intended to ensure that individual chargers are compatible for all devices.

Qi® symbol

6.6.2. Wireless charging in the G12

Wireless charging (WCA) in the G12 is visible for the customer in the form of a special wireless charging tray. The **Telephone with wireless charging** (SA 6NW) is standard equipment for the US market. Instead of a base plate, the vehicle is then equipped with a wireless charging tray.

In the case of telephone with wireless charging, both Qi®-capable cell phones or optionally the BMW Display key (SA 3DS) are charged in the G12.

A large number of cell phones are already equipped with the WCA function (Qi® ready) and can be charged in the wireless charging tray. In addition, the function can be retrofitted to the cell phone by fitting a WCA-capable rear cover or adding a WCA-capable case.

⚠

Never place a cell phone and the BMW Display key in the wireless charging tray together.

Only one of the two devices would be charged.

Bluetooth audio streaming, Bluetooth Apps streaming, Screencast (Desktop Sharing) and associate image or video streaming via Android smart devices can be used in the vehicle during charging of the cell phone in the wireless charging tray. Details of the individual streaming services can be found in the “G12 Audio systems” training manual.

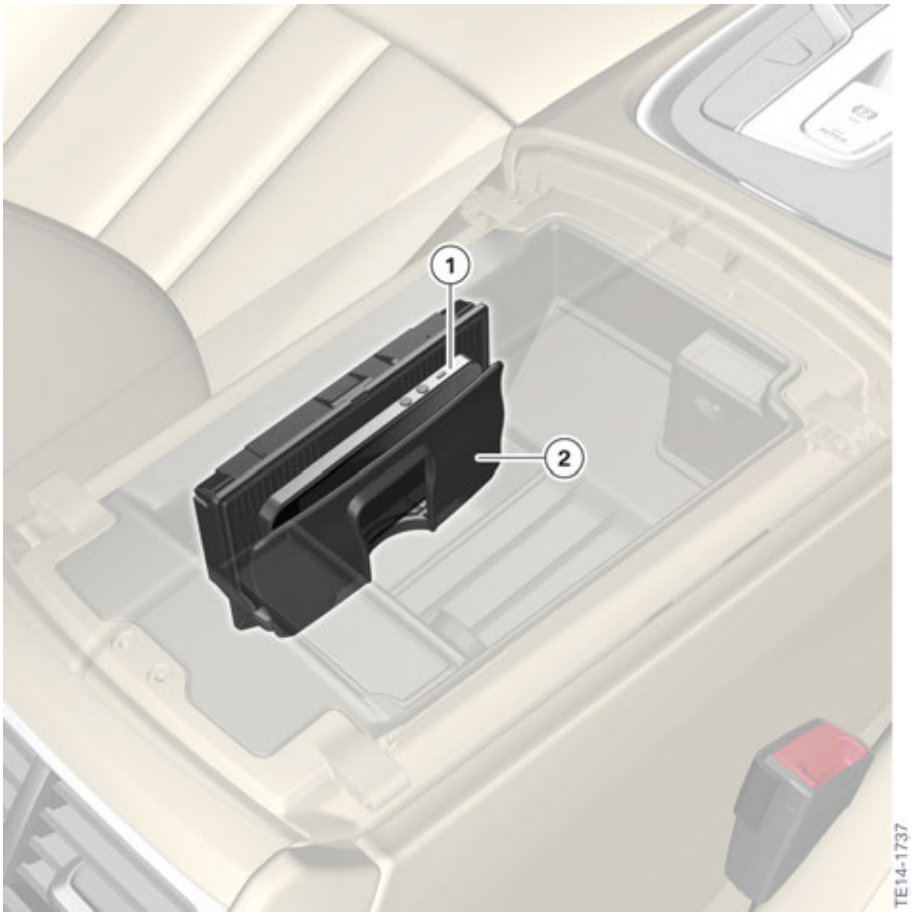

Wireless charging tray in the G12

Index	Explanation
1	Cell phone with a corresponding inductive case (Qi®-certified)
2	Wireless charging tray in the G12

Wireless charging tray with inserted BMW Display key

6.6.3. Basic principle

The principle of the wireless charging technology is based on induction. A transmitter coil and a receiver coil wirelessly transmit the charging voltage for the cell phone.

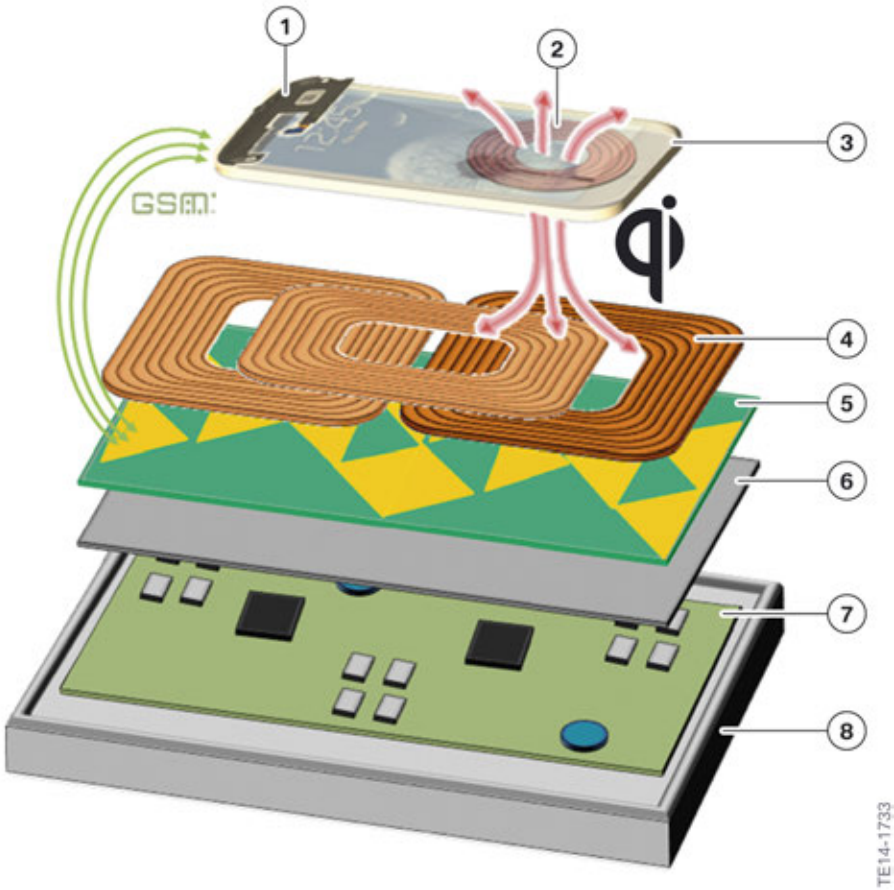

Basic principle of wireless charging

Index	Explanation
1	Smartphone with coupling antenna for cell reception
2	Induction coil in the outer cover of the smartphone
3	Outer cover of the smartphone with receiver coil
4	Transmitter coil in the wireless charging tray
5	Telephone antenna in the wireless charging tray (inductive)
6	Ferrite in the wireless charging tray
7	Electronics with connections for the vehicle electrical system of the wireless charging tray
8	Outer cover of the wireless charging tray

6.6.4. Connection to the vehicle electrical system

The wireless charging tray is connected to the vehicle electrical system by voltage supply via the rear power distribution box. The antenna input of the wireless charging tray is also connected with the TCB2 and thus with the TEL1 telephone antenna in the fin via a line compensator. The system also has an activation line from the WCA tray to the line compensator.

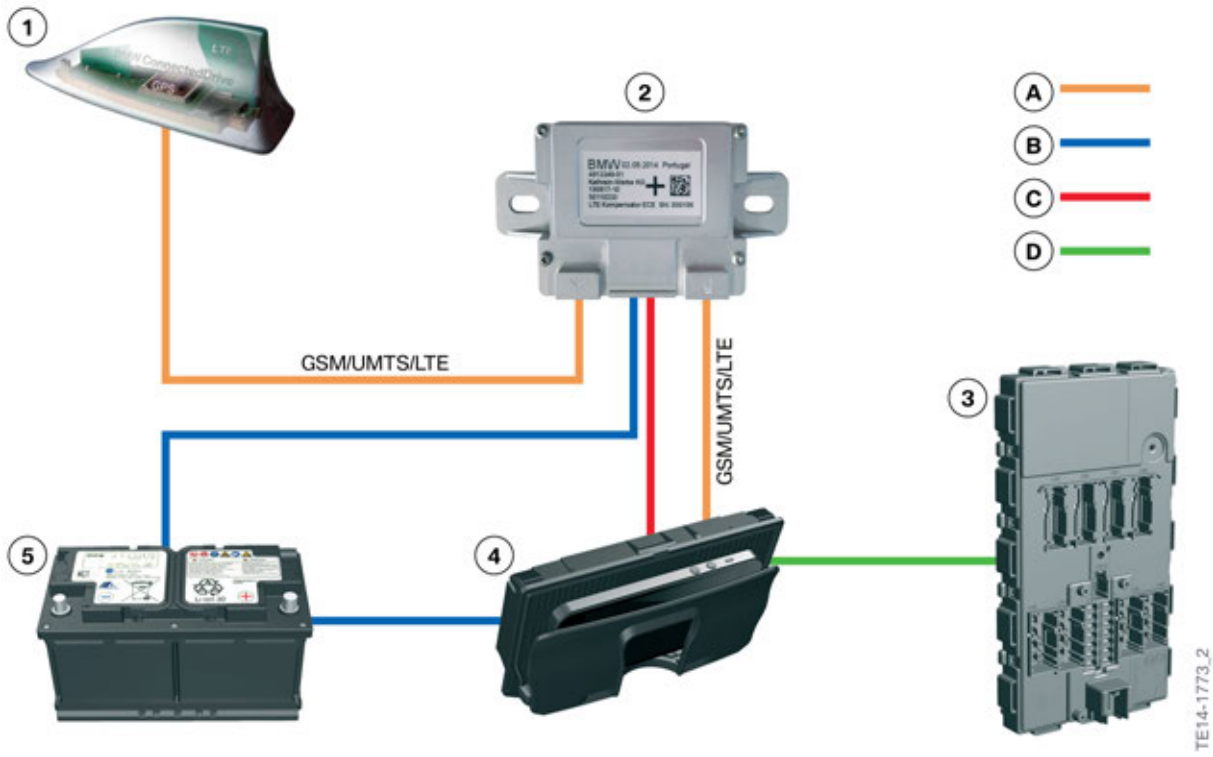

Wireless charging in the G12 vehicle electrical system

Index	Explanation
Conductors	
A	Antenna lines
B	Voltage supply
C	Activation line
D	K-CAN5 connection
Components	
1	TCB2/fin with telephone antenna TEL1
2	Line compensator
3	Body Domain Controller (BDC)
4	Wireless charging tray
5	Vehicle electrical system voltage supply

6.6.5. Wireless charging hardware

The wireless charging tray has a connection for voltage supply and K-CAN5 connection. An antenna line is also fitted which is connected with a line compensator. An activation line is additionally provided for this line compensator.

Wireless charging tray connections

Index	Explanation
1	Voltage supply, connection to the K-CAN5, activation line for line compensator
2	Antenna connection to TEL1 telephone antenna in the roof fin (via the line compensator)

6.6.6. Line compensator

In order to compensate for the losses of wireless charging, the G12 is equipped with an LTE-capable line compensator (SIMO). With this line compensator, the reception quality of the wireless charging transmit/receive system again reaches the level of a base plate.

The line compensator is installed in the rear area of the G12 and is connected with the wireless charging antenna and TEL1 in the roof fin. In addition, the line compensator is connected to the voltage supply via the BDC and an activation line of the WCA tray.

Line compensator in the G12

Index	Explanation
1	Connection to the telephone antenna TEL1 in the TCB2 or roof fin
2	Voltage supply, activation line for line compensator
3	Antenna connection of the wireless charging tray

6.6.7. Built-in and external WCA charging coils

Built-in WCA charging coils

A lot has happened on the smartphone market since the Palm®Pre smartphone was launched as the first smartphone with wireless charging in 2009.

⚠

The Palm®Pre uses a proprietary charging protocol (proprietary = manufacturer-specific, unpublished standard) which does not correspond to the protocol used in the G12 Qi® standard. This also means that the Palm®Pre is not supported by the WCA in the G12!

In addition to Google®Nexus 4 & 5, the Microsoft® (formerly Nokia®) devices Lumia 920 and 1520, the Samsung®Galaxy S6 has also been available with this technology since Spring 2015. All of these devices have the advantage that they support the Qi® standard and can therefore be used immediately in vehicles that are equipped with WCA technology.

External WCA charging coils

Back covers with WCA technology in accordance with the Qi® standard are now available on the free market for many cell phones. The receiver coil is then integrated in the plastic cover.

S4 device from Samsung® with WCA-capable back cover

A protective cover with integrated WCA technology is currently being developed for the iPhone® from Apple® by BMW Parts and Accessories. Further details about this will be available in 2016.

6.6.8. Compatible devices

There is again a reference guide for customers so that they can find out whether their smartphone is compatible with the G12.

The BMW My-CE page at:

http://www.bmwusa.com/Standard/Content/Owner/BluetoothTechnology/bluetoothframedin.aspx

www.bmw.com/bluetooth

The web site provides information about **Wireless Charging (WCA)** in addition to the already familiar compatibility information. New here is the information about compatibility for Wi-Fi Hotspot, Near Field Communication NFC and Screencast.

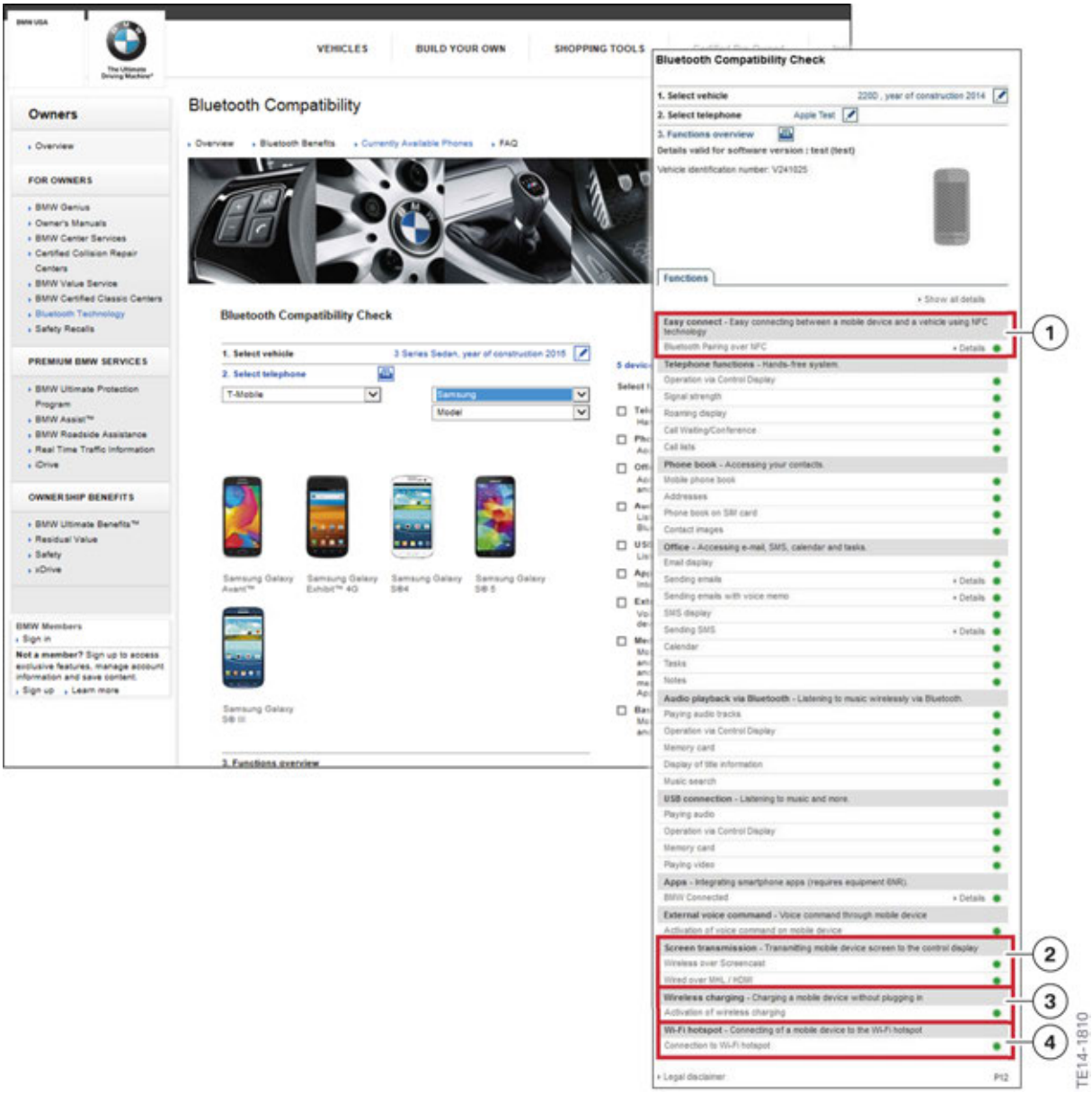

MY-CE information page for the customer

Index	Explanation
1	Near Field Communication (NFC)
2	Screencast
3	Wireless charging
4	WLAN hotspot

6.6.9. Status LED and possible incorrect operation

An LED is provided on the wireless charging tray in order to inform the customer about the respective status of the charging connection.

The LED starts to light up blue as soon as a metal object is inserted in the wireless charging tray. During this time, the electronics in the wireless charging tray checks whether the metal object is WCA- or Qi®-compatible and can be charged. If this is the case, i.e. if "brokering" was successful, the LED remains illuminated "blue" after 10 s. If this should not be the case, the LED will go off again after 10 s.

If there is a compatible device and another object in the wireless charging tray (e.g. a coin), both objects will be detected by the system and the charging procedure will **not** be started.

Charge status LED of the wireless charging tray

Index	Explanation
1	A compatible cell phone in the tray. The LED lights up blue for 10 s and remains blue.
2	A compatible cell phone and a **foreign body** in the tray. The LED lights up blue for 10 s and then changes its color.
3	A compatible cell phone and a **foreign body** in the tray. The LED lights up orange after 10 s.

To conclude the WCA topic, a short matrix is provided below which lists the different flashing codes.

Color	LED status	Description
Black	OFF	WCA off (terminal 30B off)
Black	OFF	WCA operational
Black	OFF	Cell phone detected, but not charging function. Cell phone is already fully charged or switched off.
Blue	Continuous illumination for 10 s	Metal object detected
Blue	Continuous illumination	Cell phone was detected and is being charged.
Blue	Continuous illumination	BMW Display key detected and is being charged. The LED status "blue" is also maintained during the short interruption when the Display key sends its identification to the BDC!
Blue	Continuous illumination	In exceptional cases a Qi®-capable cell phone and a small foreign body may be detected and the phone will still be charged. The threshold value has not been exceeded in this case.
Orange	Continuous illumination	Cell phone detected but no charging function due to overheating (temperature above 60° C (140° F)
Orange	Continuous illumination	Foreign body and cell phone detected, no charging function.
Red	Continuous illumination	Internal fault. Visit BMW Service.

6.6.10. Forgotten cell phone alert

Another great feature of the G12 is that now, for the first time, a Check Control message can be output if a device is left behind in the vehicle. If a device is detected in the wireless charging tray the customer will be alerted before exiting the vehicle.

The Check Control message is then displayed both on the instrument cluster and on the CID.

The feature must be activated in the vehicle for it to work. The customer can activate/deactivate this function in the main menu "My Vehicle" – submenu "System settings" – "Wireless charging tray".

The warning is issued if the following warning triggers occur in the correct order:

1 Engine is started

2 Cell phone (object detected) in the wireless charging tray

3 Engine is stopped

4 Driver's door is opened (cell phone still in the wireless charging tray)

5 Check Control message is triggered

Forgotten cell phone alert

Index	Explanation
1	Forgotten cell phone alert

6.7. Near Field Communication NFC

6.7.1. Introduction

What is it?

Near Field Communication or NFC allows data to be transmitted by means of wireless technology over short distances of up 4 cm. It was developed by Philips® and Sony® in 2002. It is based on Radio-Frequency Identification (RFID) technology with 13.56 MHz.

6.7.2. NFC transmitter

NFC transmitter

NFC offers various possibilities for communicating wirelessly and without pressing a button or key combination. NFC is used with smart cards in car parks, for example. There are also possibilities for using NFC in USB sticks, keys, smartphones, tablets and all conceivable kinds of electronic devices.

6.7.3. Use at BMW

Instead of initiating data setup for a connection via the iDrive system or the controller, it is now possible with the G12 to pair **a smartphone** with the vehicle much faster via NFC.

Transmitter versions for Near Field Communication

Index	Explanation
1	NFC chip in a Smart Card
2	NFC via a USB token
3	Version used in BMW G12 via an NFC-capable smartphone
4	NFC via an ID transmitter (ignition key)

Why was a smartphone chosen as an NFC transmitter? For the customer, this is the most customer-friendly application in the vehicle. In 2010, there were around 60 million smartphones that were equipped with NFC technology. In 2015, the figure will be around **550 million smartphones.** In addition to renowned manufacturers such as HTC®, Microsoft® (formerly Nokia®) and Samsung®, the iPhone®6 from Apple® is also equipped with NFC technology.

6.7.4. NFC basic principle

The following illustration shows the design of a simple receiver system for NFC technology.

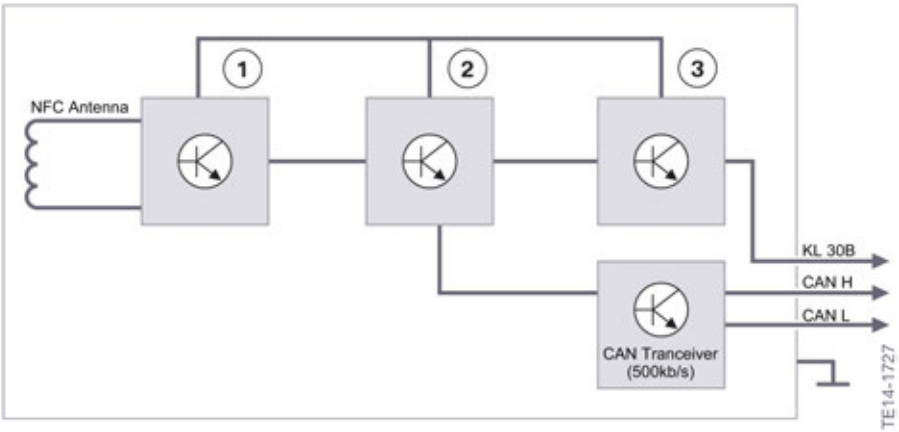

Schematic illustration of NFC receiver

Index	Explanation
1	NFC receiver unit and antenna electronics
2	NFC control unit processing unit
3	NFC control unit

6.7.5. NFC receiver

NFC receiver in G12

The NFC antenna (receiver unit) and the NFC control unit were separated in the G12 for package reasons. The installation location of the NFC antenna is indicated to the customer by means of a symbol on the air vent below the Central Information Display. The reception antenna receives a signal from the transmitter antenna of the smartphone when the smartphone is at a distance of 1-2 cm from the NFC symbol.

Symbol for NFC under the air vent in G12

Index	Explanation
1	NFC symbol
2	Customer smartphone

6.7.6. Installation locations of NFC components

Rear view of air vent

The NFC receiver unit and the NFC antenna connection components are visible when the front center air vent in the G12 is removed.

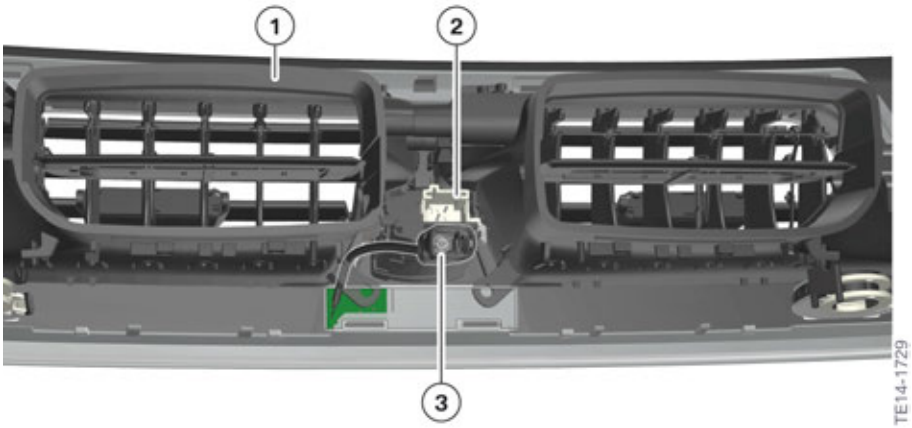

Rear view of air vent in G12

Index	Explanation
1	Rear view of front center air vent
2	Connection for Intelligent Safety button and hazard warning switch
3	NFC antenna port with connected NFC receiver unit

The NFC control unit is connected to the vehicle electrical system of the G12 via the K-CAN5.

NFC control unit

The NFC control unit is located on the rear wall of the glove box in the G12.

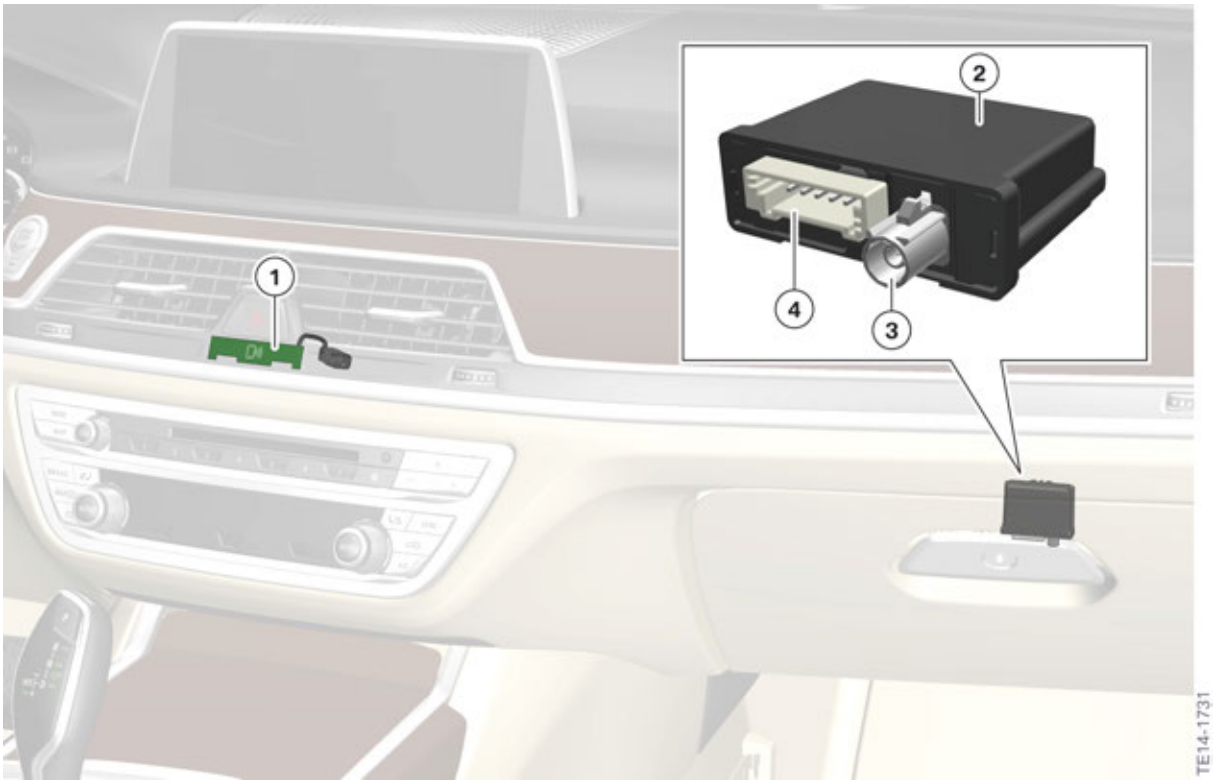

Installation positions of NFC antenna and NFC control unit

Index	Explanation
1	NFC receiver unit and antenna electronics
2	NFC control unit
3	Connection for NFC antenna
4	Voltage supply for NFC control unit, bus connection K-CAN5

6.7.7. NFC functions in the vehicle

NFC functions in the vehicle

At the series launch of the new BMW 7 Series G12, **Bluetooth pairing** for smartphones is possible via NFC.

⚠

Pairing via NFC is possible only if the NFC function has been activated on the smartphone before the pairing attempt.

As the next step, it is planned to perform pairing of cell devices with the Wi-Fi hotspot of the vehicle for the start of 2016.

6.8. Overview of connectivity

To conclude the topic of connectivity, a table is provided below for the areas of telephone/entertainment/connectivity showing which functions are offered by the respective options. **Although only the Wireless Charging (SA 6NW) option applies to the US market G12,** it is a useful tool to understand future telephone systems and their functions:

Function	Protocol/signal	Hands-free Bluetooth (SA 6NH)	Convenient telephone (SA 6NS)	Wireless Charging (SA 6NW)
Telephone				Standard in the US market G12
Bluetooth enabling	Hands Free Protocol (HFP)	X	X	X
Extended hands-free quality (second microphone for front passenger)	Hands Free Protocol (HFP)		X	X
Conferences	Hands Free Protocol (HFP)	X	X	X
Support for 2 telephones (3rd telephone only for Bluetooth audio)	Hands Free Protocol (HFP)		X	X
Call lists (last number redial, received, missed)	Hands Free Protocol (HFP)	X	X	X
Voice control with iPhone (SIRI)	iPod® Accessory Protocol (IAP)	X	X	X
Function	**Protocol/signal**	**Hands-free Bluetooth (SA 6NH)**	**Convenient telephone (SA 6NS)**	**Wireless Charging (SA 6NW)**
contacts				Standard in the US market G12
Access to vehicle and telephone contacts	Phone Book Access Profile (PBAP)	X	X	X

G12 Telephone and Telematics Systems

6. Connectivity

Function	Protocol/signal	Hands-free Bluetooth (SA 6NH)	Convenient telephone (SA 6NS)	Wireless Charging (SA 6NW)
Saving contacts in the vehicle and as selection options for navigation (only in combination with navigation system Professional SA 609)	Phone Book Access Profile (PBAP)	X	X	X
Office				Standard in the US market G12
SMS text message/ e-mail / calendar / (voice) notes / tasks / contact pictures (support dependent on CE device)	Message Access Profile (MAP)		X	X
Function	**Protocol/signal**	**Hands-free Bluetooth (SA 6NH)**	**Convenient telephone (SA 6NS)**	**Wireless Charging (SA 6NW)**
Entertainment				Standard in the US market G12
AUX-IN port for external music player	Analogue audio signal	* (only with Rear Seat Entertainment SA 6FR)	* (only with Rear Seat Entertainment SA 6FR)	* (only with Rear Seat Entertainment SA 6FR)
1. USB port for USB sticks, external media players, iPod®, iPhone®	Message Access Profile (MAP); iPod Accessories Protocol (iAP)	X	X	X
2. USB port for USB sticks, external media players, iPod®, iPhone®	Message Access Profile (MAP); iPod Accessories Protocol (iAP)		X	X
Playback of compressed videos (only in combination with SA 609)	Various video decoders in the Head Unit High		X	X

G12 Telephone and Telematics Systems

6. Connectivity

Function	Protocol/signal	Hands-free Bluetooth (SA 6NH)	Convenient telephone (SA 6NS)	Wireless Charging (SA 6NW)
Display of Album Cover Art with iPhone and HU-H (SA 609)	iPod® Accessory Protocol (IAP)	X	X	X
Bluetooth audio streaming	Audio/Video Remote Control Protocol (AVRCP) 1.3	X	X	X
Charging-Only mode (Information in the last row of the table)*		X	X	X
Audio/Picture/ Video streaming for Android® smartphones	Wi-Fi®Direct	X	X	X
Function	**Protocol/signal**	**Hands-free Bluetooth (SA 6NH)**	**Convenient telephone (SA 6NS)**	**Wireless Charging (SA 6NW)**
Charging function				Standard in the US market G12
1. USB port (1.5 A via the head unit); connected via USB hub (for SA 6NS or SA 6NW) also 2.1 A		X	X	X
2. Additional USB port with 2.1 A charge current			X	X
Wireless charging tray				X
Base plate for snap-in adapter (including external antenna connection and USB smartphone connection in the baseplate)			X	
Wi-Fi Hotspot				Standard in the US market G12

Function	Protocol/signal	Hands-free Bluetooth (SA 6NH)	Convenient telephone (SA 6NS)	Wireless Charging (SA 6NW)
Wi-Fi hotspot (with prefit BMW SIM card and Connected Drive Store)			X	X
APPS				Standard in the US market G12
Apps (SA 6NR as part of SA 6AK). The application runs on the smartphone (iPhone® or Android®) supported with vehicle data and display on the vehicle CID). Cable-connected via USB port.			X	X
Apps (SA 6NR as part of SA 6AK). The application runs on the smartphone (iPhone® or Android®) supported with vehicle data and display on the CID of the vehicle). Wireless via Bluetooth.			X	X

G12 Telephone and Telematics Systems

6. Connectivity

Function	Protocol/signal	Hands-free Bluetooth (SA 6NH)	Convenient telephone (SA 6NS)	Wireless Charging (SA 6NW)
Seamless transition from Bluetooth (Wireless) to USB (cable-connected) and vice versa			X	X
Charging-Only mode (Information in the last row of the table)*			X	X

* Charging-Only mode:
If the external device is actively connected via Bluetooth Apps, there is **no longer** a seamless transition from **Bluetooth Audio or Apps (wireless)** to USB audio (cable-connected). This was the case with HU-H. The stream was stopped and switch over to cable took place.
In the G12, if Apps or audio playback is wished via cable or the USB port when a wireless source is already active, the Bluetooth function must first be **deactivated**. Otherwise the stream will continue wirelessly after connection for the charging function in spite of the cable connection.

Bayerische Motorenwerke Aktiengesellschaft
Qualifizierung und Training
Röntgenstraße 7
85716 Unterschleißheim, Germany

Technical training.
Product information.

G12 Audio Systems

Edited for the U.S. market by:
BMW Group University
Technical Training
ST1501 10/1/2015

BMW Service

General information

Symbols used

The following symbol is used in this document to facilitate better comprehension or to draw attention to very important information:

⚠

Contains important safety information and information that needs to be observed strictly in order to guarantee the smooth operation of the system.

Information status and national-market versions

BMW Group vehicles meet the requirements of the highest safety and quality standards. Changes in requirements for environmental protection, customer benefits and design render necessary continuous development of systems and components. Consequently, there may be discrepancies between the contents of this document and the vehicles available in the training course.

This document basically relates to the European version of left hand drive vehicles. Some operating elements or components are arranged differently in right-hand drive vehicles than shown in the graphics in this document. Further differences may arise as the result of the equipment specification in specific markets or countries.

Additional sources of information

Further information on the individual topics can be found in the following:

- Owner's Handbook
- Integrated Service Technical Application.

Contact: conceptinfo@bmw.de

©2015 BMW AG, Munich

Reprints of this publication or its parts require the written approval of BMW AG, Munich

The information contained in this document forms an integral part of the technical training of the BMW Group and is intended for the trainer and participants in the seminar. Refer to the latest relevant information systems of the BMW Group for any changes/additions to the technical data.

Information status: **June 2015**
BV-72/Technical Training

G12 Audio Systems

Contents

1. Introduction **1**

2. Headunit High 2 (HU-H2) **3**
- 2.1. History and new development 3
  - 2.1.1. From CCC to HU-H2 3
  - 2.1.2. Headunit High 2 3
- 2.2. Generations 3
  - 2.2.1. Radio Professional 4
  - 2.2.2. Navigation Professional 4
- 2.3. Application scenario and versions 5
- 2.4. System overview 5
  - 2.4.1. Bus overview 6
  - 2.4.2. System wiring diagram HU-H2 9
  - 2.4.3. Functional wiring diagram for Headunit-H2 11
  - 2.4.4. New Ethernet 12

3. HU-H2 Hardware **14**
- 3.1. System components 14
  - 3.1.1. Exterior view 14
  - 3.1.2. Interior 15

4. HU-H2 Functions **17**
- 4.1. New operating concept 17
  - 4.1.1. Introduction 17
  - 4.1.2. iDrive operating concept ID5++ 17
- 4.2. Media/Radio 20
  - 4.2.1. Introduction to radio functions 20
  - 4.2.2. FM 20
  - 4.2.3. AM 21
- 4.3. Media/Player functions 21
  - 4.3.1. History and new perspective 21
- 4.4. Communication 37
- 4.5. Navigation 37
  - 4.5.1. Introduction 37
  - 4.5.2. Overview of map data updating 37
- 4.6. Map data updates 38
  - 4.6.1. Introduction 38
  - 4.6.2. Updating by the workshop 39
  - 4.6.3. Updating by the customer 41
  - 4.6.4. Automatic updating 45
  - 4.6.5. Loading the enabling code 48

G12 Audio Systems
Contents

4.6.6. Availability 49

5. Speakers and Amplifiers 51
5.1. Overview 51
5.2. Top Hi-Fi system 51
5.2.1. Top Hi-Fi system components 54
5.3. High End system 56
5.3.1. System overview 56
5.3.2. Bowers & Wilkens 58
5.3.3. Speakers of the High End system 63
5.3.4. High End amplifier (AMPT) 65
5.3.5. Microphone 66

6. Active Sound Design 67

G12 Audio Systems

1. Introduction

Introduction to Headunit High 2

The 4th generation head unit with Navigation Professional **Headunit High 2** has gradually replaced the Headunit High since the end of 2014. The first vehicle with the new head unit was the new 2 Series convertible (F23). This was followed by the BMW 1 Series and 2 Series vehicles in March 2015 and the BMW 3 Series and 4 Series vehicles in July. The Headunit High 2 with completely revamped hardware will now also be offered in the **new BMW 7 Series (G12)**. The user interface (ID5++) for the new BMW 7 Series (G12) has also been completely redesigned.

Vehicle electrical system connection

With the Headunit High 2, a new bus system has been introduced. The "OPEN Alliance BroadR-Reach" (**OABR Ethernet**) is used for the data transmission between the head unit and telematic control unit. The topic of OABR Ethernet is dealt with in detail in the "G12 Telephone and telematic systems" training manual.

Navigation

In addition to the familiar update options for the map data, an automatic update is now also offered in combination with the Headunit High 2 with the introduction of the G12. Customers can benefit from automatic map updates in combination with a 3-year navigation map subscription. The head unit contains a new user interface and many new navigation features. These are described in the "G12 Navigation system" training manual. In addition, a number of sensors for the navigation system have been relocated to the surrounding vehicle electrical system environment.

Rear Seat Entertainment (RSE)

The rear seat entertainment system has also been updated in combination with the Headunit High 2. Alongside a new RSE control unit and a tablet PC to control the functions (called Touch Command), a host of new functions are now available in the vehicle.

Telematic systems and ConnectedDrive

A new telematic control unit is being introduced at BMW with the Headunit High 2. For the first time, the Telematic Communication Box 2 (TCB2) offers the mobile radio standard Long Term Evolution (LTE) in the vehicle. LTE is used for the ConnectedDrive services (e.g. BMW Online, Internet), the telematic services (TeleService, Remote Services) and for the emergency call system Intelligent Emergency Call. This is complemented by a permanently installed Wi-Fi hotspot (SA 6WD) for the first time in the automotive industry. This hotspot also supports the LTE standard. You can find further information regarding the Wi-Fi hotspot in the "G12 Telephone systems" training manual.

Telephone, connectivity, player connection

A new feature in the G12 is that telephone with wireless charging is offered as standard equipment in the US market. The feature is BMW **Telephony with wireless charging** (SA 6WA), wireless charging of mobile phones. Further details on this are provided in the "G12 Telephone and telematic systems" training manual.

2 new versions of the snap-in adapter for the base plate for convenient telephone are offered for the new iPhone® 6. The generic snap-in adapter (Snap-in-Adapter Connect Universal) can be used for all iPhone versions (iPhone® 5, 5C, 5S, 6 and 6 Plus) with Lightning® connector (available since February 2015). In addition, a special iPhone®6 snap-in adapter is offered exclusively for the iPhone

G12 Audio Systems

1. Introduction

6® (available since April/May 2015). The snap-in adapter Universal 2.0 was introduced for Android® telephones in spring 2015. This supports all common Android® telephones in the areas of hands-free mode, charging, smartphone music player connection and Android® apps.

In addition, there are 2 USB interfaces in the G12 (second USB interface in combination with the standard equipment (in the US) Telephone with Wireless charging) which additionally permit connection of smartphones as music players via one-wire technology with all original (OEM) and BMW Accessories cables.

Bluetooth audio streaming is already present as standard equipment.

As **additional streaming variants**, the G12 also offer Screencast (via Wi-Fi®Direct) and Apps over the Air (via Bluetooth).

Speaker systems

2 Hi-Fi systems are offered in the G12. Each of the 2 systems has a Hi-Fi amplifier which is specifically adapted for each system. The Top Hi-Fi system is the Harman Kardon Surround Sound System (SA 688) is offered as the standard system.

And for the first time at BMW, a High End system is offered in cooperation with Bowers & Wilkins. The system can be ordered by the customer as optional equipment (SA 6F1).

G12 Audio Systems
2. Headunit High 2 (HU-H2)

2.1. History and new development

2.1.1. From CCC to HU-H2

From the Car Communication Computer to the Headunit High 2

An overview of the different versions of the large head unit (head unit with Navigation Professional) is provided below.

Generations	Designation/year
1st generation	Car Communication Computer (CCC) (2003)
2nd generation	Car Information Computer (CIC) (2008)
3rd generation	Headunit High (2012)
4th generation	Headunit High 2 (2014)

2.1.2. Headunit High 2

The following chapter on the 4th generation head unit with Navigation Professional covers the following topics:

- Headunit High generations
- Headunit High 2: Application scenario and versions
- Bus overview, system wiring diagram, functional wiring diagram, OABR Ethernet
- OABR Ethernet

2.2. Generations

At BMW, the head unit family is now in its 4th generation. A brief overview of the previous head units used at BMW, which have a **Central Information Display (CID)**, can be found below. The following table contains the different designations from the individual departments of the BMW Group. The previous versions of Radio Professional are differentiated in the 1st table. This corresponds to the basic equipment of the G12 (not available in the US market).

The second table lists the previous versions of the head units with Navigation Professional.
The Headunit High 2 is also used for this function in the G12. A Business navigation system is not offered for the G12.

G12 Audio Systems

2. Headunit High 2 (HU-H2)

2.2.1. Radio Professional

Manufacturer & (SA code/ Generation)	Marketing	Technical Qualification	Diagnostics	Development Specification	Series introduction as from E60 (2003)
Harman/ Becker (SA 663/1)	Radio Business (without MP3 function); Radio Professional	Multi-Audio-System-Controller M-ASK (CHAMP US)	Multi-Audio-System-Controller M-ASK (CHAMP US)	Multi-Audio-System-Controller M-ASK (CHAMP US)	E63, E60 (2003)
Harman/ Becker (SA 663/2)	Radio Professional	Car Information Computer Basic	CIC	CIC MID	F10 (until 09/2010)
Alpine (SA 663/2)	Radio Professional	Car information computer basic 2	CHAMP	CHAMP 2	F10 (from 09/2010)
Magneti Marelli (SA 663/3)	Radio Professional	Headunit Basic (HU-B)	Headunit Basic (HU-B)	Entry Media	BMW F3x, F2x (07/2014)
Magneti Marelli (SA 6FW/3)	Media system	Headunit Basic (HU-B)	Headunit Basic (HU-B)	Entry Media	BMW F48 (09/2015)

2.2.2. Navigation Professional

Manufacturer & (SA code/ Generation)	Marketing	Technical Qualification	Diagnostics	Development Specification	Series introduction as from E60 (2003)
Siemens/ VDO (SA 601 or 609/1)	Navigation Professional	Car Communication Computer CCC	Car Communication Computer (CCC)	Car Communication Computer (CCC)	E63, E60 (2003)
Harman/ Becker (SA 601 or 609/2)	Navigation Professional	Car Information Computer	CIC	CIC High	E8x, E9x (2008)
Harman/ Becker (SA 601 or 609/3)	Navigation Professional	Headunit High (HU-H)	Headunit High (HU-H)	NBT	F01 LCI (2012)

G12 Audio Systems

2. Headunit High 2 (HU-H2)

2.3. Application scenario and versions

Brand, development code; (series)	Headunit High 2
BMW; G12 (BMW 7 Series)	**07/15 with new user interface 2015 (ID 5++)**
BMW; F23 (2 Series Convertible)	11/14 with current user interface (ID 4++)
BMW; F2x (BMW 1 Series and 2 Series Coupé)	03/15 with current user interface (ID 4++)
BMW; F3x (BMW 3 Series and 4 Series)	07/15 with current user interface (ID 4++)
BMW; F48 (BMW X1)	9/15 with current user interface (ID 4++)
I01 (BMW i3)	With new user interface probably in 2016 (ID 5++)
I12 (BMW i8)	No planned date at the moment

2.4. System overview

The fundamental parts of this training manual include a bus overview, vehicle electrical system connection of the Headunit High 2 and functional wiring diagram. Since it is not possible to anticipate all training manuals and it is additionally wished to preserve clarity, further wiring diagrams for the Headunit High 2 can be found in the following training manuals:

Topic	Training Manual
Antenna system in G12	"G12 Telephone and telematic systems"
Convenient telephone (includes USB audio in the base plate and USB video via the USB audio interface) and with Screencast as new feature.	"G12 Telephone and telematic systems"
Rear seat entertainment in G12	"G12 Rear seat entertainment"
Speakers in G12	Chapter 5 "Speakers and amplifiers" of this training manual
Camera systems in G12	"G12 Assistance systems"

G12 Audio Systems

2. Headunit High 2 (HU-H2)

2.4.1. Bus overview

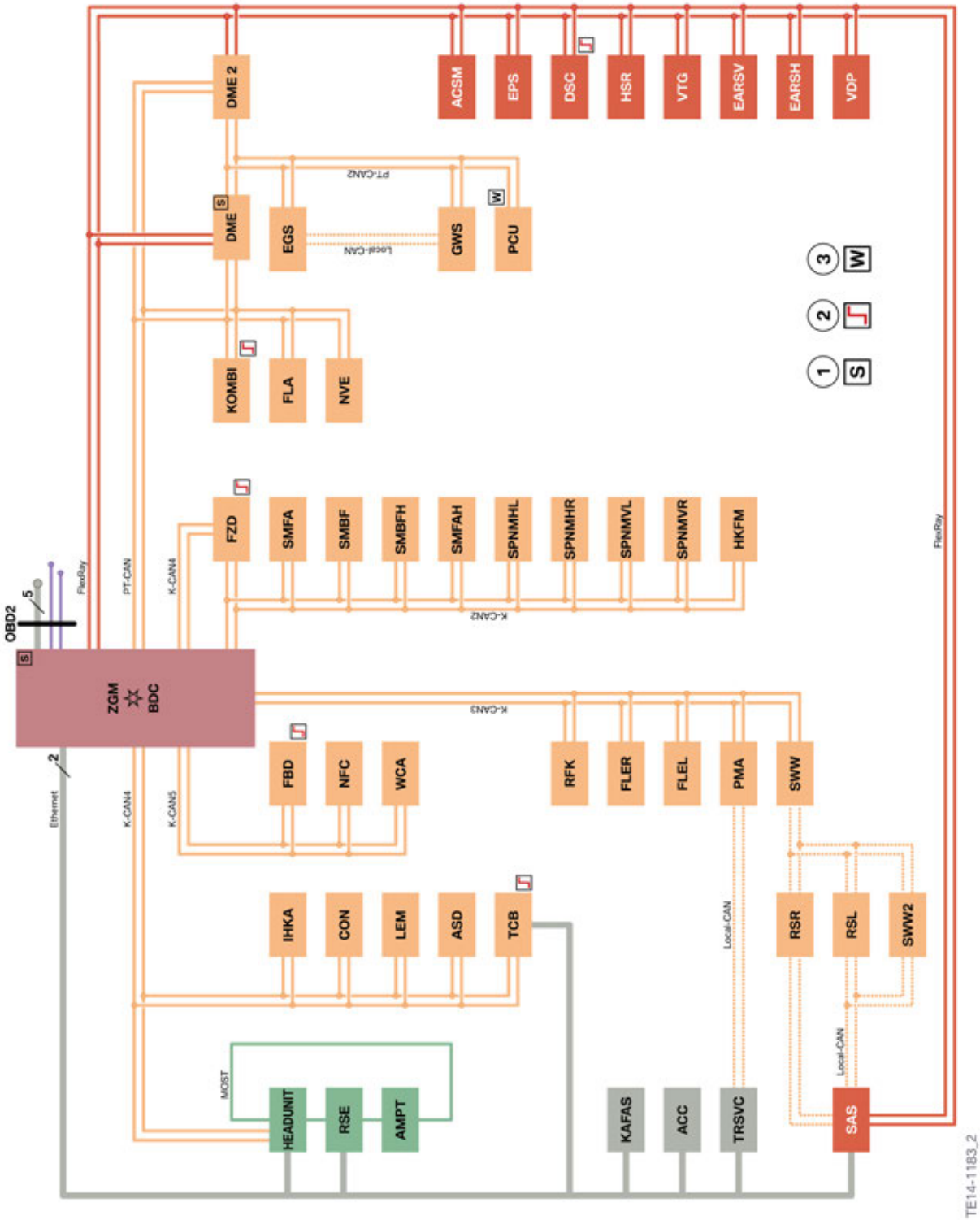

G12 bus overview

G12 Audio Systems
2. Headunit High 2 (HU-H2)

Abbreviation	Explanation
ACC	Active cruise control
ACSM	Crash Safety Module
AMPT	Amplifier Top (amplifier of the Top Hi-Fi system)
ASD	Active Sound Design
BDC	Body Domain Controller
CON	Controller
DME	Digital Motor Electronics
DSC	Dynamic Stability Control
EARSH	Electric active roll stabilization rear
EARSV	Electric active roll stabilization front
EGS	Electronic transmission control
EPS	Electromechanical Power Steering
FLA	High-beam assistant
FLER	Frontal Light Electronics Right
FLEL	Frontal Light Electronics Left
FZD	Roof function center
GWS	Gear selector
HEADUNIT	Headunit High 2
HKA	Automatic rear air-conditioning and heating
HKFM	Tailgate function module
HSR	Rear axle slip angle control
IHKA	Integrated automatic heating / air conditioning
KAFAS	Camera-based driver support systems
KOMBI	Instrument panel
LEM	Light Effect Manager
NFC	Near Field Communication
NVE	Night Vision Electronics
PCU	Power Control Unit
PMA	Parking maneuvering assistant
RFK	Reversing camera
RSE	Rear Seat Entertainment
RSL	Radar Sensor Left (avoidance assistant)
RSR	Radar Sensor Right (avoidance assistant)
SAS	Optional equipment system
SMBF	Seat module, passenger

G12 Audio Systems
2. Headunit High 2 (HU-H2)

Abbreviation	Explanation
SMFA	Seat module, driver
SMFAH	Seat module, driver, rear
SPNMHL	Seat pneumatics module back left
SPNMHR	Seat pneumatics module back right
SPNMVL	Seat pneumatics module front left
SPNMVR	Seat pneumatics module front right
SWW	Lane change warning (primary)
SWW2	Lane change warning (secondary)
TCB2	Telematic control unit 2
TRSVC	Control unit for rear view camera and SideView
VDP	Vertical Dynamic Platform
VTG	Transfer box
WCA	Wireless charging tray
1	Start-up node control units for starting and synchronizing the FlexRay bus system
2	Control units with wake-up authorization
3	Control units also connected at terminal 15WUP

G12 Audio Systems

2. Headunit High 2 (HU-H2)

2.4.2. System wiring diagram HU-H2

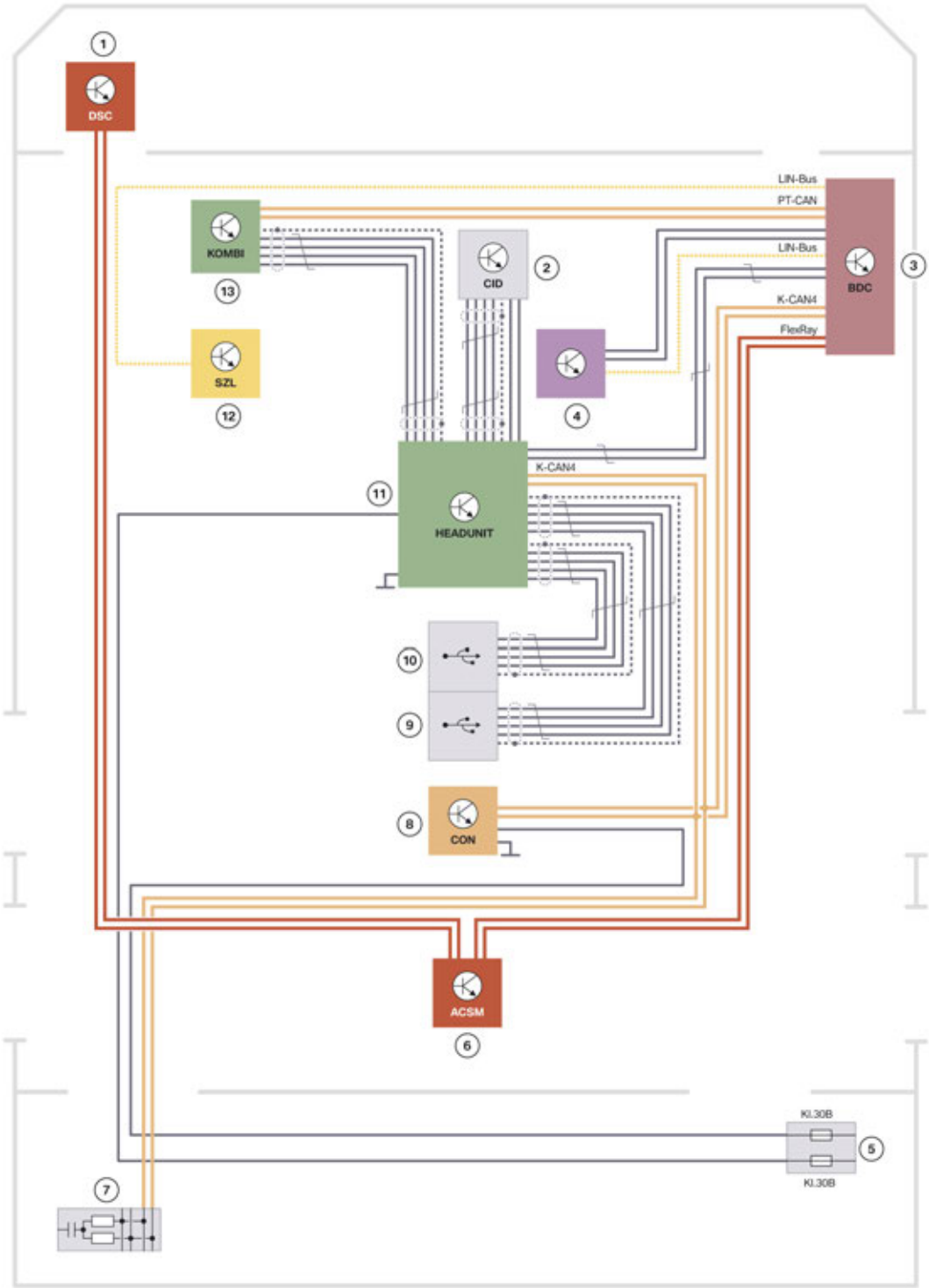

Headunit High in the G12

G12 Audio Systems

2. Headunit High 2 (HU-H2)

Index	Explanation
1	Dynamic Stability Control (DSC)
2	Central Information Display (CID)
3	Body Domain Controller (BDC)
4	Audio control panel
5	Power distribution box, rear
6	Crash Safety Module (ACSM)
7	CAN terminator
8	Controller (CON)
9	USB interface in the center console (standard equipment)
10	USB interface in the center armrest (with SA 6NS or 6WC)
11	Head unit
12	Steering column switch cluster (SZL)
13	Instrument panel (KOMBI)

G12 Audio Systems

2. Headunit High 2 (HU-H2)

2.4.3. Functional wiring diagram for Headunit-H2

The functional wiring diagram of the Headunit High 2 HU-H2 is shown below, here with TCB2.

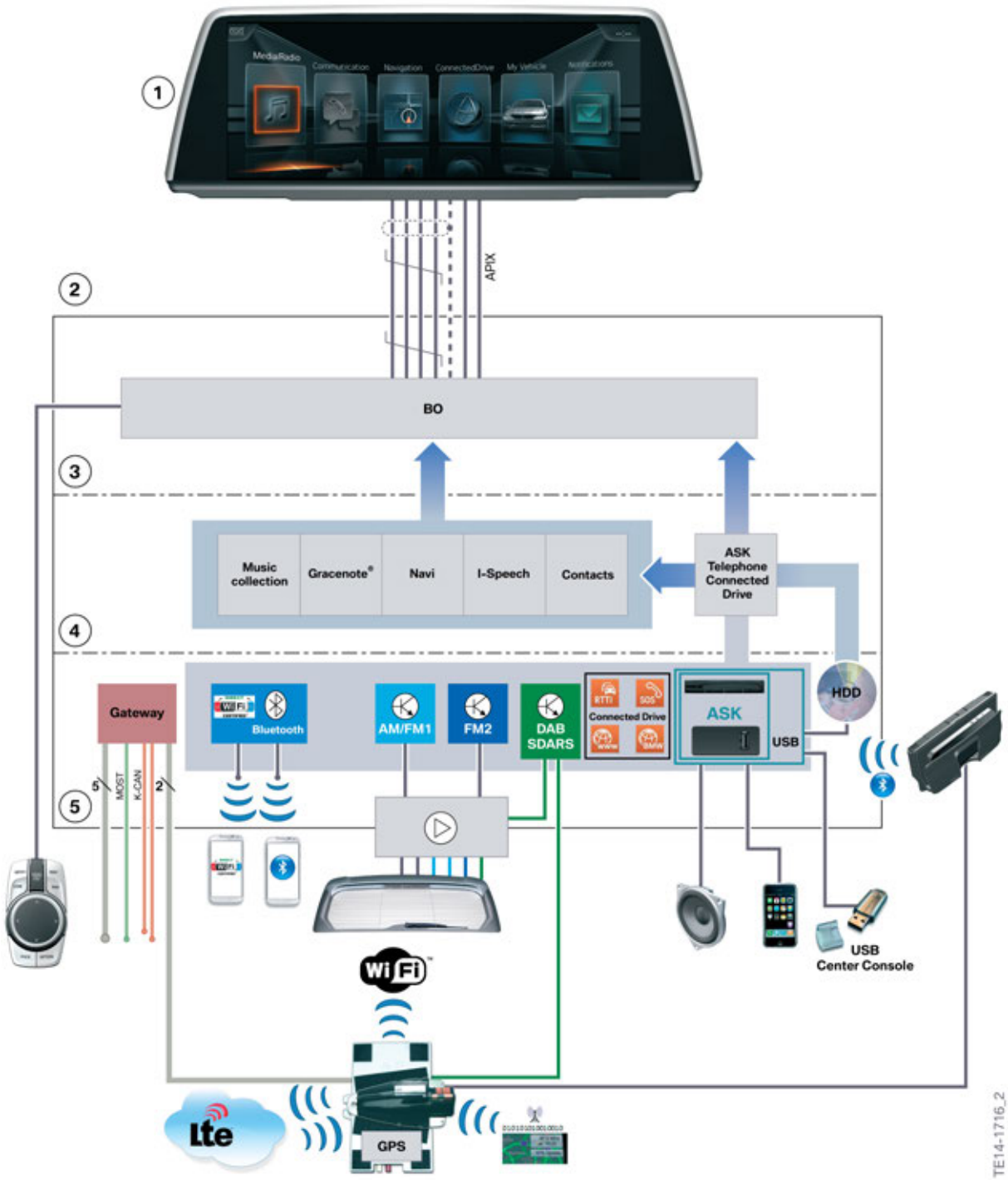

Functional wiring diagram of HU-H2 with TCB2

Index	Explanation
1	Central Information Display (CID)
2	Headunit High 2
3	User interface
4	Application/software
5	Interfaces / Hardware connection

2.4.4. New Ethernet

History

Ethernet with 5-lines or 4-lines.
Since the F01, **Ethernet** has been used at BMW for vehicle programming and for updating the map data of the navigation systems with **5 lines** (4x data lines and 1x activation line of the OBD interface including shielding).

Another Ethernet connection is installed in F0x or F1x vehicles: a **5-wire Ethernet system** from the BDC to the head unit or from the head unit to the Rear Seat Entertainment (RSE). Four data lines are used here for transmission of the navigation data for the RSE. An activation line is not required.

Both Ethernet variants are comparable with the standard Ethernet variant 100BASE–TX in PC networks. The Ethernet version with 5 lines is **still** used in the G12 from the OBD2 interface to the Body Domain Controller.

New

Ethernet with 2 lines

In the G12, the Headunit High is connected with the Telematic Communication Box 2 (TCB2) by means of a **new Ethernet version** for the first time in the BMW 7 Series. Unshielded Twisted Single Pair is an Ethernet variant which was developed by the OPEN Alliance BroadR-Reach. These are two-wire, twisted and unshielded lines for data transfer. At BMW, this Ethernet is called **"OABR Ethernet"**, which has been especially adapted for the automotive sector.

The data rate for an OABR Ethernet connection is up to maximum of 2 x 100 Mbit/s.

A comparison of the previous connection between BDC and head unit (5-wire Ethernet) and the new variant (2-wire Ethernet) can be found below.

G12 Audio Systems

2. Headunit High 2 (HU-H2)

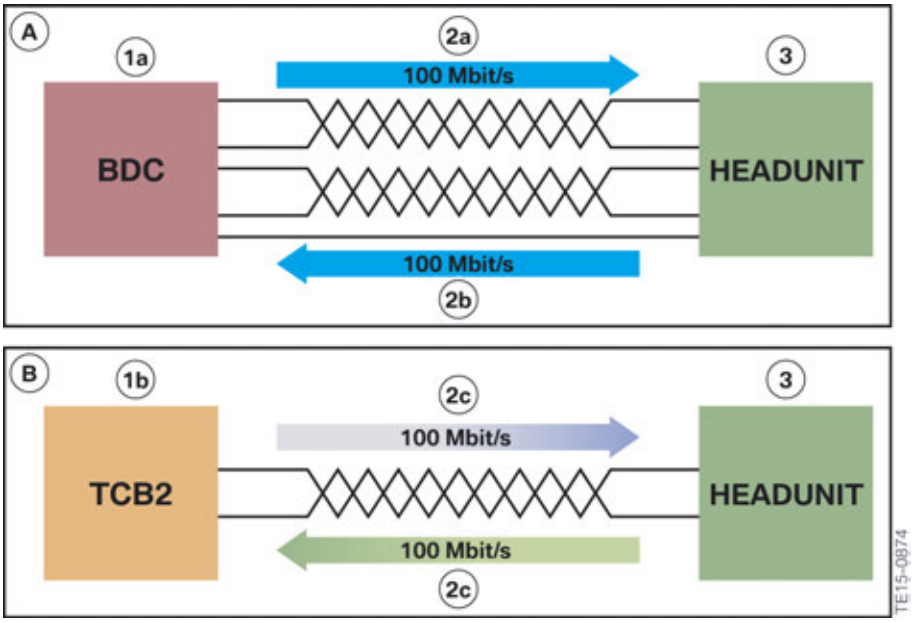

OABR Ethernet in comparison with conventional 2–wire Ethernet

Index	Explanation
A	5-wire standard Ethernet 100BASE–TX
B	2-wire OABR Ethernet
1a	Body Domain Controller (BDC)
1b	Telematic Communication Box 2 (TCB2)
2a	"Transmit" data line with 100 MBit/s
2b	"Receive" data line with 100 MBit/s
2c	Simultaneous transmission and reception with 100 MBit/s + 100 MBit/s, 2c in double version as it is a differential signal.
3	Head unit

Hardware advantages

One of the first options is the transmission of vehicle camera data (F15). The advantage of Ethernet is that vehicle cameras (IP-based) are not only connected to one control unit, but several control units can access the data flows of the vehicle cameras. The network is therefore very flexible and is well prepared for the future.

Another important advantage is the fast programming of control units. The programming times are reduced significantly via Ethernet. Whereas a CAN bus can only transmit data with a maximum length of 8 bytes per message, Ethernet messages have a length of over 1500 bytes. The user data rate thus increases: Considerably more message packages can be transmitted in a shorter period.

Other applications such as the control unit communication, the networking of vehicles with the environment and diagnosis usages, will also increase the importance of Ethernet. Furthermore, with a OABR Ethernet connection only two lines (instead of the previous five lines with Ethernet) are used, meaning additional weight and costs can be saved. Details on data transfer, the physical layer and layer model are explained in the "G12 Bus systems" training manual.

G12 Audio Systems

3. HU-H2 Hardware

3.1. System components

3.1.1. Exterior view

The Headunit High 2 is the **successor model** to the Headunit High introduced in 2012. The G12 is the first vehicle in which the new HU-H2 with new user interface will be installed.

The manufacturer for the European and US versions is Harman®.

Front view with silhouette comparison

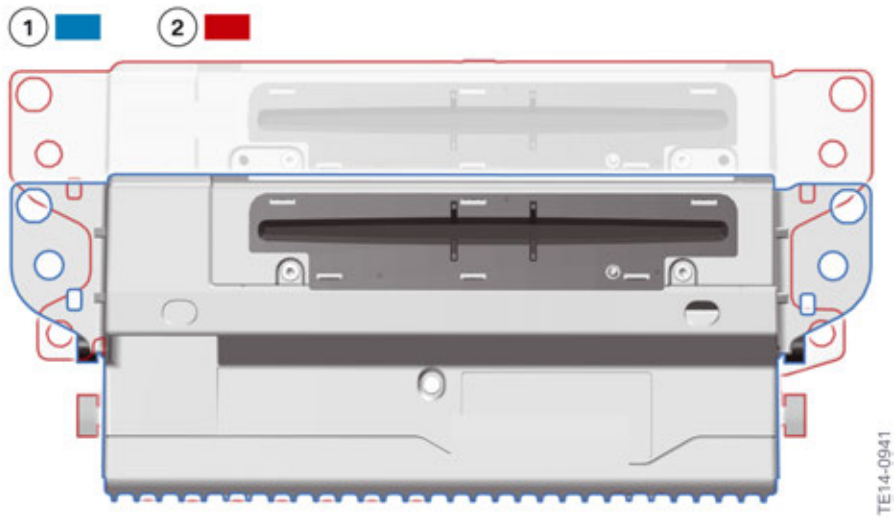

Front view of head unit

Index	Explanation
1	Headunit High 2 with 1.5” housing
2	Headunit High with 2" housing

Rear view

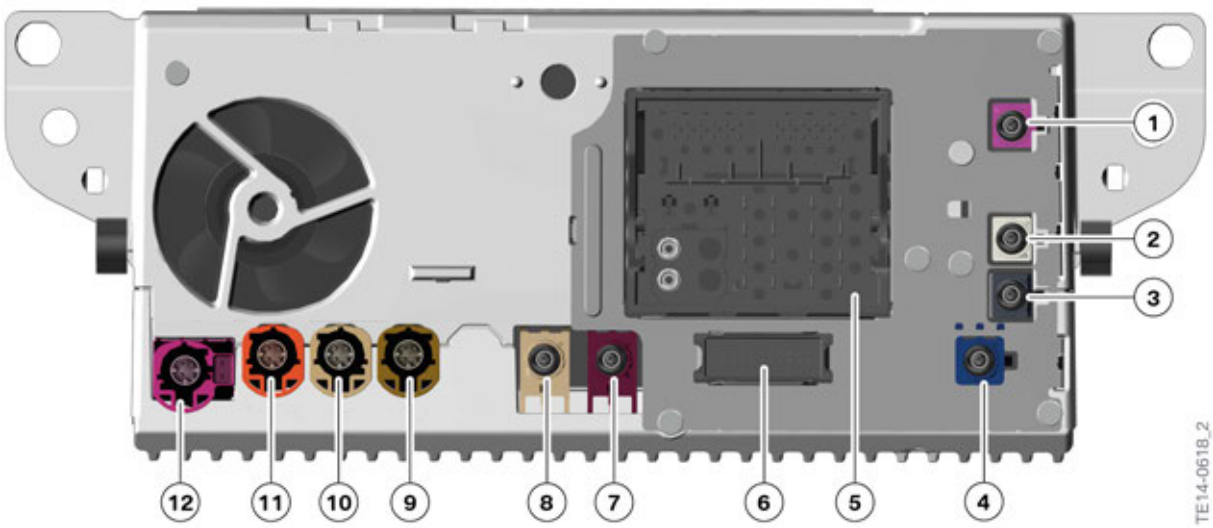

Rear view of Headunit High 2

Index	Explanation
1	SDARS in the US version
2	FM2 antenna
3	AM/FM1 antenna
4	GPS antenna connector not used on the G12; the GPS signal is always transmitted to the head unit via OABR Ethernet in the G12
5	Main connector
6	Ethernet connection; connection to the Telematic Communication Box 2 (TCB2)
7	Wi-Fi antenna connection for Wi-Fi® Direct connections
8	Connection for Bluetooth antenna
9	USB2 connection; customer's smartphone via the telephone base plate
10	USB1 connection; customer access to USB audio interface
11	APIX connection to instrument cluster (KOMBI)
12	APIX connection to Central Information Display (CID)

3.1.2. Interior

The Headunit High 2 contains the following components:

- 1.5" DIN housing (Headunit High was accommodated in a 2” housing).
- Texas Instruments® CPU (processor) with 1.5 GHz and 2 cores.
- 4 GB RAM.

- Dirana III® AM/FM tuner for phase diversity (see "G12 Audio systems", Chapter 4.5).
- DVD drive, integrated.
- OABR processor for connection via OABR Ethernet to the new telematic control unit Telematic Communication Box 2 (TCB2) as a roof-mounted version (for more information, refer to the "G12 Telephone and telematic systems" training manual).
- Hard disk drive with 200 GB storage capacity with new partitioning.
- SVS system and integrated Touchbox for the controller from Nuance®.

Hard disk partition

In terms of the volume, the hard disk retains the same level of the predecessor head unit with 200 GB. The new division of the hard disk is explained in the next graphic.

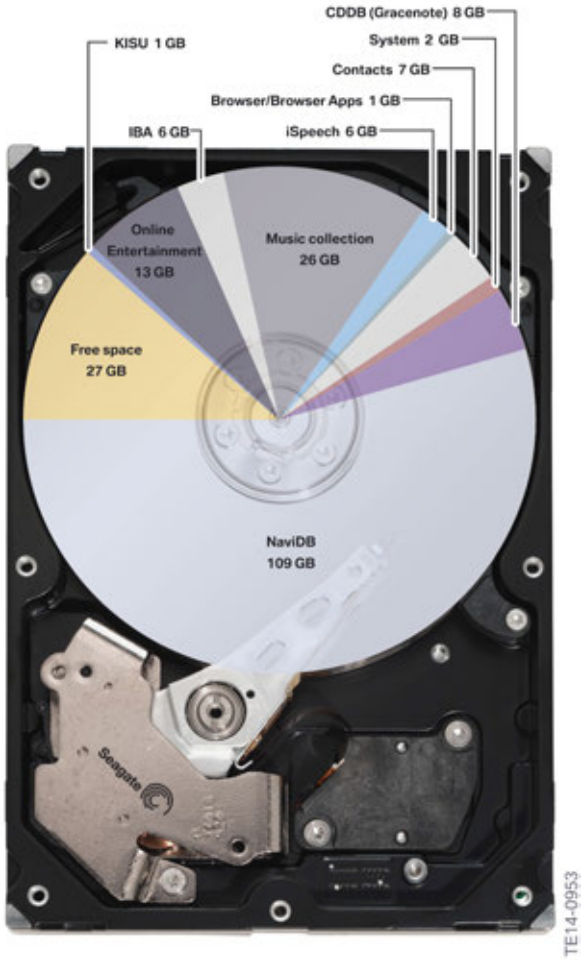

G12 Audio Systems

4. HU-H2 Functions

4.1. New operating concept

4.1.1. Introduction

The functions of the new Headunit High 2 correspond to those of the Headunit High with the hardware introduction. However, the improved hardware components (CPU, RAM, graphics card) allow for considerably smoother image structures.

A full description of the individual functions of the Headunit High 2 can be found in the Owner's Manuals of the respective vehicles.

4.1.2. iDrive operating concept ID5++

The iDrive operating concept comprises the following 3 components in the basic equipment: the Central Information Display (CID), the controller (CON) and the Headunit High 2. The user interface is controlled in the Headunit High 2. The operating concept was completely revamped for the introduction of the G12. It was optimized in order to also permit **touch and gesture control** in addition to control by the iDrive system and operation at the center stack (audio control panel). Touch screen control at the CID is part of the standard equipment; gesture control is linked to selection of optional equipment.

Further detailed information on the topic of touch and gesture control and the associated optional equipment is provided in the "Displays and Controls" training manual.

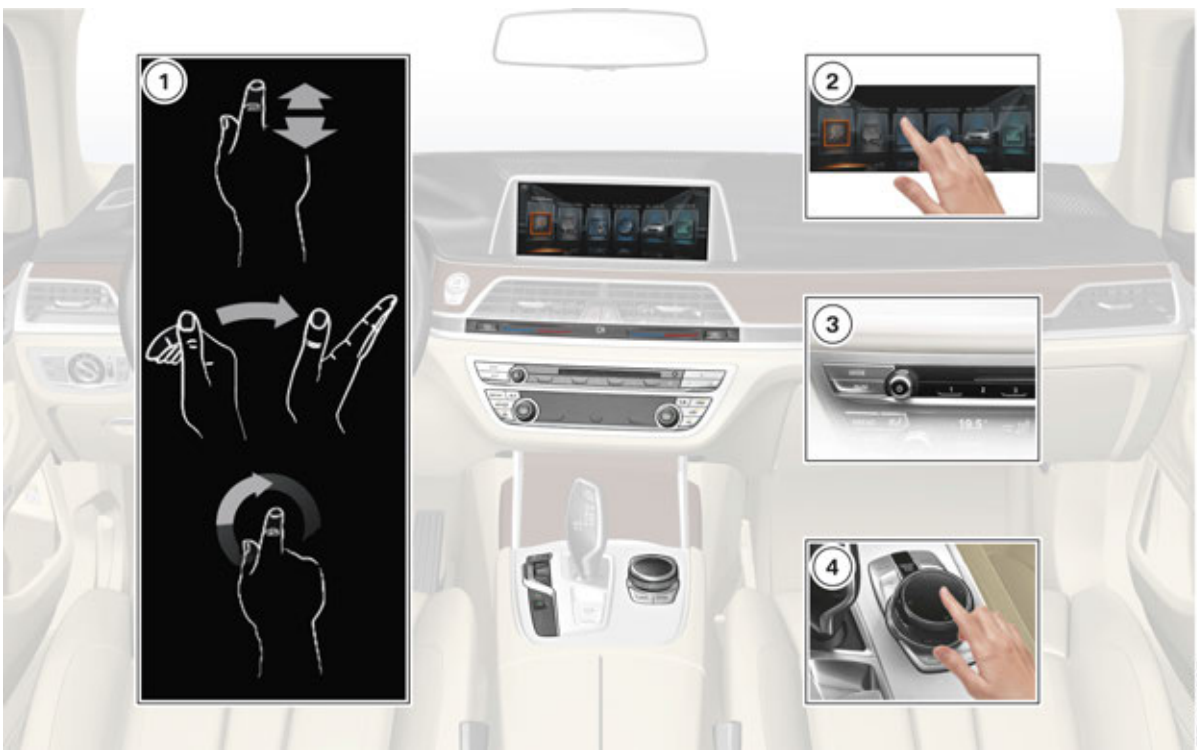

Operating options in the G12

G12 Audio Systems

4. HU-H2 Functions

Index	Explanation
1	Operation via gesture control (standard equipment in the US market G12)
2	Operation via touch screen on the Central Information Display (CID) (standard equipment)
3	Operation via the audio control panel on the center stack or favorite buttons (standard equipment)
4	Operation via the Touch Controller (standard equipment).

A completely redesigned main menu offers improved clarity in the Central Information Display in the G12.

Main menu overview in the G12

G12 Audio Systems
4. HU-H2 Functions

The **main menu "Media/Radio"**: All media sources of the predecessor head units, i.e. all content of the "old" main menus CD/Multimedia and Radio, was combined here in a large list. The **new main menu Media/Radio was created** from the menus CD/Multimedia and Radio. For the customer, this offers a large number of different options for playing audio files, images, video/film files and apps in the vehicle. In order to maintain clarity, the customer can make the media selection **individually** in a new submenu and thus create his own individual list.

The submenu is called: **Personalize menu**. This submenu "Personalize menu" is not just provided under Media/Radio but also in almost all new main menus so that the user can configure the display lists individually.

The **main menu "Communication"** is a combination of the previous Telephone main menu and previous Office main menu. However, Bluetooth and Wi-Fi pairing is not just possible here, but can now be performed in all menus. This can be selected under the menu option "**Manage mobile devices**".

Messages are displayed here in the main menu Communication and in the newly created menu Notifications. The difference is that the read messages (SMS text messages, e-mails) disappear from the Notifications main menu but remain in the Communication menu.

The content of the **main menu "Navigation"** has also been restructured and contains a host of new features. The touch screen function of the Central Information Display has been adapted, for example. The highlights include the newly designed Micro City Map with a scale of up to 10 m, the learning navigation function, the route magnet and route visualization by means of an antenna view as well as the road book in split screen mode. Further information on this is provided in the "G12 Navigation system" training manual.

The **main menu "ConnectedDrive"** has been kept as a separate menu. The ConnectedDrive services are now no longer "nested" in folders like in the predecessor head units, as was the case for BMW Online, for example. All ConnectedDrive services are now contained in a clear list. This list can also be personalized by means of the "Personalize menu" option. Apps are now started automatically from the iPhone® after they have been accessed once. (The last-accessed app is stored by the system and is activated again when the system is started again). In addition, the apps can now also be connected with the vehicle via a Bluetooth connection alternatively to connection via the USB connection.

The "My Vehicle" menu combines the previous menus Vehicle info and Settings. The settings are divided into vehicle settings and system settings. Further details on this are provided in the "G12 Displays and Controls training manual".

The "Notifications" menu" is a notification center for all message such as e-mails, SMS text messages, Concierge Service and, as a new feature, also Check Control messages. Only new notifications are displayed here that have been sent to the vehicle and not yet read.

A new **"Favorites" menu** can be selected by double-clicking on the direct access key MENU on the controller. The last-selected menu items are then displayed here for selection.

G12 Audio Systems
4. HU-H2 Functions

Favorites menu on the CID

All further information on the operating concept is provided in the "G12 Displays and Controls" training manual.

4.2. Media/Radio

4.2.1. Introduction to radio functions

In the G12, radio reception for FM/AM is offered via the familiar phase diversity system with a tuner in the head unit. The FM/AM system in the G12 is realized in combination with an antenna amplifier and the antennas in the rear window of the vehicle. FM/AM are included in the basic equipment.

4.2.2. FM

FM in the G12

4.2.3. AM

AM in the G12

4.3. Media/Player functions

4.3.1. History and new perspective

A radio was initially installed in the vehicle exclusively for reception and reproduction of FM/AM signals in the vehicle. This changed with the installation of the first head units in vehicles as from 2002 as everything was now combined in one device. In addition to familiar devices such as a CD/DVD drive and the radio tuners, the navigation system was now also included in the head unit (inbox). Access to the CD/DVD changer was also possible. Information was now displayed in a Central Information Display (CID) and no longer on a small segment display like that used for the radio. With the extension to include external devices in the following years, there were then countless possibilities for audio playback available to the customer.

Customers could now receive, play back, play back "from external source" and stream via Bluetooth audio. A list of all possibilities of playback via an external device available up to now is provided in the "G12 Telephone and telematic systems" training manual. The "G12 Telephone and telematic system" training manual is very well suited for this since ULF-SBX High or Combox were the connectivity interface in the vehicle for a long time. This applies to both USB connection (2007) as well as the first Bluetooth audio streaming (2010) and the first App function (2010).

These functions (both USB from external source as well as Bluetooth audio and Apps) have been integrated in the head unit since 07/12, including the responsible hardware in the form of the Combox multimedia. This means that all connectivity/player functions are now combined in the head unit. In the new G12, the list of options for connection/streaming has even been extended further. This means that a separate training manual would be needed in order to explain all the possibilities in detail.

Another possibility is to change the perspective. Instead of listing all the functions of a device as in the past and thus showing all the possibilities at once, we will now consider the result from the customer's point of view. It is the customer who decides with which medium or function he would like to play back audio, images, video or apps.

G12 Audio Systems
4. HU-H2 Functions

As a result, the focus is instead on the playback options for **Audio** (music, audio books, etc.), **Images** (customer images, images for media), Film+Video (DVD, video file, etc.) or **Apps** (BMW Connected App or third-party provider). The new user interface (ID5++) of the Headunit High 2 also speaks in favour of this philosophy as it offers the option to hide functions that are not used (chapter Operating concept). This results in the following table**, including the new features** for G12:

AUDIO

G12 Audio Systems

4. HU-H2 Functions

Media source	Function in the vehicle	Required optional equipment
	The customer wishes analog playback of music in the vehicle from an **external MP3 player** . In this case, the music data is transferred by means of an analog audio cable with jack plug. **Interface in the G12:** There is an AUX-IN port only in the RSE control unit.	Rear seat entertainment Experience (SA 6FR)
	Music files (MP3, WMA, etc.) for internal audio playback in the head unit; the music data is transferred digitally from the **USB stick** to the head unit and is played back from there. **Interface:** The USB stick is connected to the vehicle via one of the two USB interfaces. With a rear seat entertainment system, the vehicle is also equipped with a USB interface in the rear passenger compartment.	The USB interface in the front center console is standard equipment. There is an additional USB interface in the storage compartment in the center armrest for Convenient telephone (SA 6NS) or Telephone with wireless charging (SA 6NW). USB interface on the RSE control unit with the equipment Rear seat entertainment Experience (SA 6FR)
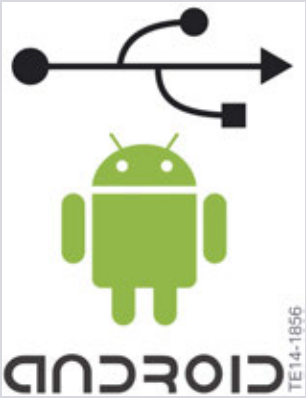	**Accessory Mode** Audio playback takes place externally via the **Android®** audio player of the BMW Connected App in the smartphone. **USB mode** Here, the smartphone is connected to the head unit as a storage medium similar to a USB stick. The music files are then transferred from the smartphone (smartphone in MTP mode (= Media Transfer Protocol)) to the head unit via USB. The audio player is the head unit in this case. **Interface:** The mobile phone is connected to the vehicle via the **USB interface** in both modes.	USB interface in the front center console is standard equipment; additional USB interface in the storage compartment in the center armrest for Convenient telephone (SA 6NS) or **Telephone with wireless charging (SA 6NW) for the US market G12.** There is a 3rd USB interface in the vehicle in the RSE control unit for the rear seat entertainment system if the customer has ordered Rear seat entertainment Experience (SA 6FR).

G12 Audio Systems

4. HU-H2 Functions

Media source	Function in the vehicle	Required optional equipment
	Accessory Mode Audio playback takes place externally via the **Android®** audio player of the BMW Connected App in the smartphone. **USB mode** Here, the smartphone is connected to the head unit as a storage medium similar to a USB stick. The music files are then transferred from the smartphone (smartphone in MTP mode (= Media Transfer Protocol)) to the head unit via USB. The audio player is the head unit in this case. **Interface:** The mobile phone is connected with the base plate of the vehicle via the USB port of the **snap-in adapter** in both modes.	The USB interface in the front base plate is installed in the vehicle ex-works if the customer orders Convenient telephone (SA 6NS).
	Audio playback takes place via the **CD/DVD drive** in the head unit or via the Blu-ray® drive in the RSE control unit in the rear passenger compartment of the vehicle.	The CD/DVD drive is part of the basic equipment of the G12. If the equipment Rear seat entertainment Experience (SA 6FR) is installed, it is also possible to play back CD/DVD media in the RSE control unit and display content on the rear compartment displays.
	Audio playback for Blu-ray® discs is possible exclusively in the Blu-ray® drive in the **RSE control unit** in the rear passenger compartment of the vehicle.	If the equipment Rear seat entertainment Experience (SA 6FR) is installed, playback of Blu-ray® discs in the RSE control unit player is possible in addition to CD/DVD playback.

G12 Audio Systems

4. HU-H2 Functions

Media source	Function in the vehicle	Required optional equipment
	DVD changer	**No** DVD changer will be offered in the G12.
	Audio playback takes place **externally** via the **iTunes music player** of an **iPod®** or **iPhone®**; the music data is sent to the head unit as digital audio files via USB. **Interface:** The music player or mobile phone is connected to the vehicle via the USB interface. Connection takes place via the original Apple® cable (30-pin or Lightning) or by means of a one-wire cable from the BMW Parts and Accessories range.	USB interface in the front center console is standard equipment; additional USB interface in the storage compartment in the center armrest for Convenient telephone (SA 6NS) or Telephony with wireless charging (SA 6NW). There is a third USB interface in the vehicle in the RSE control unit for the rear seat entertainment system if the customer has ordered Rear seat entertainment Experience (SA 6FR).
	Audio playback takes place **externally** via the **iTunes music player** of an **iPhone®**; the mobile phone is connected with the base plate of the vehicle via the matching snap-in adapter. The music data is sent to the head unit as digital audio files via USB. **Interface:** The USB port in the base plate is used as the interface here. The matching snap-in adapter must also have USB ports (see gold additional contacts on the underside).	The USB interface in the base plate is installed in the vehicle ex-works if the customer orders Convenient telephone (SA 6NS).

G12 Audio Systems

4. HU-H2 Functions

Media source	Function in the vehicle	Required optional equipment
	Audio playback takes place via the built-in **hard disk drive HDD** in the head unit. The music was first converted by the head unit with its rip function and stored, or was imported to the hard disk drive from a USB stick or a CD.	The music hard disk is enabled for the customer with 26 GB for the music partition as from Navigation Professional (SA 609) **(standard equipment for the US market G12).**
	Analog radio Reception Analog **AM/FM** reception is realized by means of phase diversity with 2 antennas in the rear window in combination with an antenna amplifier. **Processing and output:** There is a digital signal processor in the head unit which calculates an enhanced signal from the two antenna signals using an algorithm. There is also an FM/AM triple tuner in the head unit for further signal processing and audio playback (triple tuner for radio reception, station updates and RDS).	Standard equipment
SDARS DAB+ Digital Audio Broadcasting SiriusXM SATELLITE RADIO TE14-1880	**Digital radio Reception:** The SDARS antenna is also in the fin/TCB2 in the US version. **Processing and output:** Processing and output of the received digital radio signals take place in the **SDARS tuner** in the head unit.	Digital Radio (SA 654) or **standard equipment in the US market (for one year) in G12.**

G12 Audio Systems

4. HU-H2 Functions

Media source	Function in the vehicle	Required optional equipment
	Bluetooth audio streaming Audio playback takes place by means of Bluetooth audio streaming via Audio Video Remote Control Profile (AVRCP 1.3) for Android® devices and Microsoft® devices. In addition, Bluetooth audio also supports the Accessory Protocol IAP for Apple® devices (iPod®, iPhone® etc.). AVRCP 1.4 has been offered in the head units Headunit Basic and Headunit High since 07/13. Since this protocol is implemented very differently by the smartphone manufacturers and this can lead to problems in the vehicle, it was decided not to implement AVRCP 1.4 for the series launch. The series launch will therefore take place with AVRCP 1.3 for the Headunit High. Work is urgently being carried out on developing a solution for stable implementation of AVRCP 1.4. The solution had not yet been decided at the editorial closing date. More information regarding this topic is coming in 2016.	Standard equipment

G12 Audio Systems

4. HU-H2 Functions

Media source	Function in the vehicle	Required optional equipment
	Audio streaming via Screencast Music files on the mobile phone are played back in the music player on the Cell phone and are streamed to the head unit via a Wi-Fi®Direct connection. The display of the mobile phone is mirrored (Desktop Sharing). For this purpose, a Wi-Fi connection must be established between the mobile communication device and the head unit. The function is called Screencast and can be found in the menu Media/Radio.	Convenient telephone (SA 6NS) or **Telephone with wireless charging (SA 6NW standard in the US market G12)**
	Web radio **The iPhone® is connected with the head unit via USB.** The BMW Connected App with integrated web radio is started. The data for this is supplied from the internet from the BMW backend. The digital audio files are sent from the mobile phone to the head unit.	Apps (SA 6NR) or **in the package with BMW ConnectedServices (SA 6NK) for the US market G12.** USB interface in the front center console is standard equipment, additional USB interface in the storage compartment in the center armrest for Convenient telephone (SA 6NS) or Telephony with wireless charging (SA 6NW). There is a 3rd USB interface in the vehicle in the RSE control unit for the rear seat entertainment system if the customer has ordered Rear seat entertainment Experience (SA 6FR).

G12 Audio Systems

4. HU-H2 Functions

Media source	Function in the vehicle	Required optional equipment
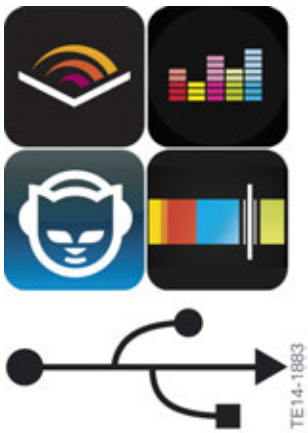	**Third-party app** Like with web radio (BMW Connected App), **the iPhone® is connected with the head unit via USB** and the respective app of the third party (e.g. Spotify, Deezer, Aupeo etc.) is started. The connection to internet radios or subscription music providers is set up via the customer's mobile phone. The digital audio files are sent from the mobile phone to the head unit.	Apps (SA 6NR) or in the package with BMW ConnectedServices (SA 6NK); USB interface in the front center console is standard equipment, additional USB interface in the storage compartment in the center armrest for Convenient telephone (SA 6NS) or **Telephone with wireless charging (SA 6NW) standard in US market G12.** There is a 3rd USB interface in the vehicle in the RSE control unit for the rear seat entertainment system if the customer has ordered Rear seat entertainment Experience (SA 6FR).

G12 Audio Systems
4. HU-H2 Functions

Media source	Function in the vehicle	Required optional equipment
	Web radio (streamed) Digital music files are transferred to the head unit via Bluetooth app streaming (a wireless, certified radio link) using the iPhone®. Control is also performed via this Bluetooth wireless link by means of the connection from the head unit to the BMW Connected App on the smartphone.	Apps (SA 6NR) or in the package with BMW ConnectedServices (SA 6NK); USB interface in the front center console is standard equipment, additional USB interface in the storage compartment in the center armrest for Convenient telephone (SA 6NS) or **Telephone with wireless charging (SA 6NW) standard in US market G12.** There is a 3rd USB interface in the vehicle in the RSE control unit for the rear seat entertainment system if the customer has ordered Rear seat entertainment Experience (SA 6FR).
	Third-party app (streamed) Digital music files are transferred to the head unit via Bluetooth app streaming (a wireless, certified radio link) using the iPhone® or Android ® mobile phone (currently in planning phase). Control also takes place via this Bluetooth wireless link by means of the connection from the head unit to the individual third-party apps (Spotify, Deezer, Napster, Aupeo, Audible etc.) on the smartphone.	Apps (SA 6NR) or in the package with BMW ConnectedServices (SA 6NK); USB interface in the front center console is standard equipment, additional USB interface in the storage compartment in the center armrest for Convenient telephone (SA 6NS) or **Telephone with wireless charging (SA 6NW) standard in US market G12.** There is a 3rd USB interface in the vehicle in the RSE control unit for the rear seat entertainment system if the customer has ordered Rear seat entertainment Experience (SA 6FR).

G12 Audio Systems

4. HU-H2 Functions

IMAGES

G12 Audio Systems
4. HU-H2 Functions

Media source	Function in the vehicle	Required optional equipment
	Image streaming via Screencast Images present on the cell phone are displayed in the gallery on the cell phone and streamed to the head unit via a Wi-Fi®Direct connection. The display of the phone is mirrored (Desktop Sharing). For this purpose, a Wi-Fi connection must be established between the mobile communication device and the head unit. The function is called Screencast and can be found in the menu Media/Radio.	Convenient telephone (SA 6NS) or **Telephone with wireless charging (SA 6NW) standard in US market G12.**
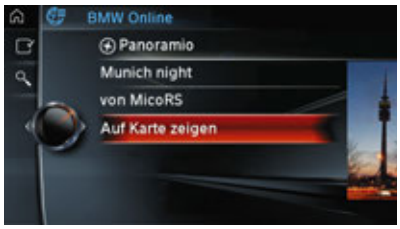	**Panoramio® images** The BMW ConnectedDrive Services include access to the mobile internet portal BMW Online. In addition to access to weather information, e-mails, messages and a wide range of apps, it is possible to display images/information for the current location or destination from the Google® service Panoramio®.	Panoramio® images have not been implemented in the G12. Instead, a number of country-specific vehicle apps such as "Webcam images" are currently being prepared. Vehicle apps in the ConnectedDrive menu with the optional equipment **ConnectedDrive Services (SA 6AK) (standard for the US market G12).**
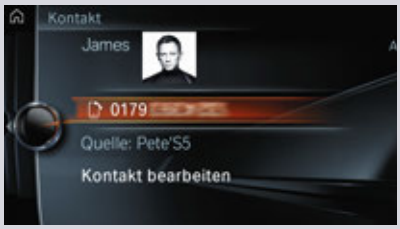	**Contact pictures** Display of contact photos from the address book of the customer's cell phone on the control display. Information on whether this function is supported by the respective cell phone is available at www.bmw.com/update	Convenient telephone (SA 6NS) or **Telephone with wireless charging (SA 6NW) (standard for the US market G12).**

G12 Audio Systems

4. HU-H2 Functions

Media source	Function in the vehicle	Required optional equipment
	Album Covers Gracenote® database The Gracenote® database stored on the hard disk drive adds missing album covers.	**Navigation system (SA 609) (standard for the US market G12)**
	Customer album covers If the customer has already added album covers to the imported music files for the hard disk drive in the individual audio files (MP3, WMA etc.), these have display priority over the album covers of the Gracenote® database. The same applies for audio playback from a USB stick.	**Navigation system (SA 609) (standard for the US market G12)**

FILM + VIDEO

G12 Audio Systems

4. HU-H2 Functions

Media source	Function in the vehicle	Required optional equipment
	Video playback via the **CD/ DVD drive** in the head unit HU-H2	Standard equipment
	Blu-ray® disc Video playback via the Blu-ray® drive in the RSE control unit.	Rear seat entertainment Experience (SA 6FR)
	Screencast video streaming Video files present on the mobile phone are played in the mobile phone player and streamed to the head unit via a Wi-Fi®Direct connection. The display of the mobile phone is mirrored (Desktop Sharing). For this purpose, a Wi-Fi connection must be established between the mobile communication device and the head unit. The function is called Screencast and can be found in the menu Media/Radio	Convenient telephone (SA 6NS) or **Telephone with wireless charging (SA 6NW) (standard for the US market G12)**
	Digital video HDMI/MHL Video content is transmitted by cable to the RSE system of the G12 via an HDMI or MHL interface. The content is played back by an external device (smartphone, tablet, games console, etc.). Transmission to the vehicle takes place in digital form. The data is sent to the RSE control unit and displayed on the two rear compartment displays if desired by the customer.	Rear seat entertainment Experience (SA 6FR)

G12 Audio Systems

4. HU-H2 Functions

Media source	Function in the vehicle	Required optional equipment
	Analog video Video via analog video signal (jack plug). Video content is transmitted by cable to the RSE system of the G12 via an analog video interface. The content is played back by an external device (smartphone, tablet, games console, etc.). Transmission to the vehicle takes place in analog form. The data is sent to the RSE control unit and displayed on the two rear compartment displays if desired by the customer.	Rear seat entertainment Experience (SA 6FR)

G12 Audio Systems

4. HU-H2 Functions

Media source	Function in the vehicle	Required optional equipment
	Digital video via USB The stored content of a USB stick is transmitted to the vehicle in digital form. Transmission of the video files to the head unit takes place via the two front USB interfaces. If rear seat entertainment is installed, the customer can additionally use the USB interface on the RSE control unit. The content is then shown on the two rear compartment displays if wished.	Convenient telephone (SA 6NS) or **Telephone with wireless charging (SA 6NW) (standard for the US market G12)** Rear seat entertainment Experience (SA 6FR)
	Digital video via the smartphone The stored content of a smartphone is transmitted to the vehicle in digital form in USB mode (transfer similar to a stick). Transmission of the video files to the head unit takes place via the two front USB interfaces. If rear seat entertainment is installed, the customer can additionally use the USB interfaces on the RSE control unit. The content is then shown on the two rear compartment displays if wished.	Convenient telephone (SA 6NS) or **Telephone with wireless charging (SA 6NW) (standard for the US market G12)** Rear seat entertainment Experience (SA 6FR)
	Video playback by means of a digital video signal via the base plate The stored content of a smartphone is transmitted to the vehicle in digital form in USB mode (transfer similar to a stick). Transmission of the video files takes place via the USB ports in the front base plate in the vehicle.	Convenient telephone (SA 6NS)

4.4. Communication

Further details on the topic of communication are provided in the "G12 Telephone and telematic systems" training manual.

4.5. Navigation

4.5.1. Introduction

The navigation system offers a host of new functions. An overview of the new functions is provided in the information bulletin "G12 Navigation system".

Since the navigation software and map data are located **on the hard disk drive** of the head unit, the update procedure for map data will be described in the next chapter of "G12 Audio systems". The reason for this is that the complete description of the Headunit High 2 is also contained in this information bulletin.

Example of navigation in the G12

4.5.2. Overview of map data updating

There are special navigation maps for every head unit for updating map data. The map data is issued in larger markets up to **four times a year** from 2015. In smaller markets once a year. Sometimes, the road maps change by up to 15 % each year. This is why an update makes sense for every customer. In the ASAP portal, a product information bulletin is created for every map release. The bulletin provides detailed information about the respective changes to the predecessor version. The current map data can be ordered by the parts technician via the Electronic Parts Catalogue (EPC):

Head unit	Map data
Car Information Computer (CIC High)	Road Map PREMIUM; update via several DVDs
Car information computer basic 1 (CIC MID)	Road Map MOTION via a USB stick
CIC Basic 2 (Champ2)	Road Map MOVE via a USB stick
HU-B with navigation	Road Map ROUTE via a USB stick
HU-H	Road Map NEXT via a USB stick
HU-H2	**Road Map EVO** (for G12) with own USB stick or streaming

A detailed description on how the map data **Road Map EVO** for the Headunit High 2 is fully (FULL Map update) or partially (Automatic Map update) updated can be found in the next chapter.

In the iDrive Options menu of the navigation, the current version of the installed map data is visible under the menu item "Version of navigation system". Furthermore, in the service acceptance the key data can be read out. The road map currently installed is then displayed.

4.6. Map data updates

4.6.1. Introduction

With the introduction of the Headunit High 2, there are now several ways to update the map data of the head unit:

- Update in BMW Service
- Updating by the customer
- Automatic updating

What is new is that with the start of the Headunit High 2 together with Navigation (SA 609), a **3 three-year map subscription** is included.

The map data is updated here up to four times per year, whereby a distinction is made between a **Full Map update** (update of the complete map data on the hard disk drive) and the **automatic map update**. The Full Map update (for e.g. Europe) can be carried out in the conventional way using a USB stick or via the BMW programming system. The difference is that the data must be uploaded onto the USB stick (up to 2019).

The automatic map update takes place by means of the SIM card installed in the vehicle only for the respective home region (e.g. Germany). The automatic map update function is planned for the markets DE, ES, FR, IT, NL, GB, US, CA and CN.

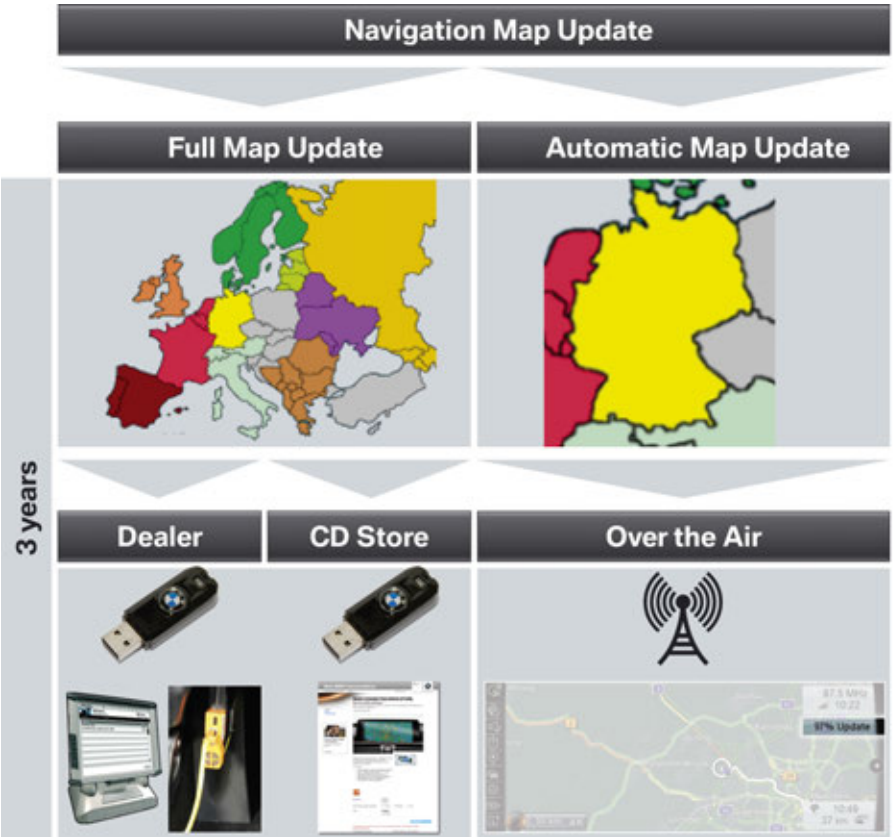

Comparison of Full Map update vs. automatic update

4.6.2. Updating by the workshop

Updating the map data remains unchanged for BMW Service. BMW Service can load the map data either via the USB interface or via the BMW diagnosis/programming system.

Transfer of the map data via the USB interface in the vehicle is performed using a USB stick onto which the service technician has copied the map data himself. The data is copied to the USB stick from a workshop PC via a copy web console.

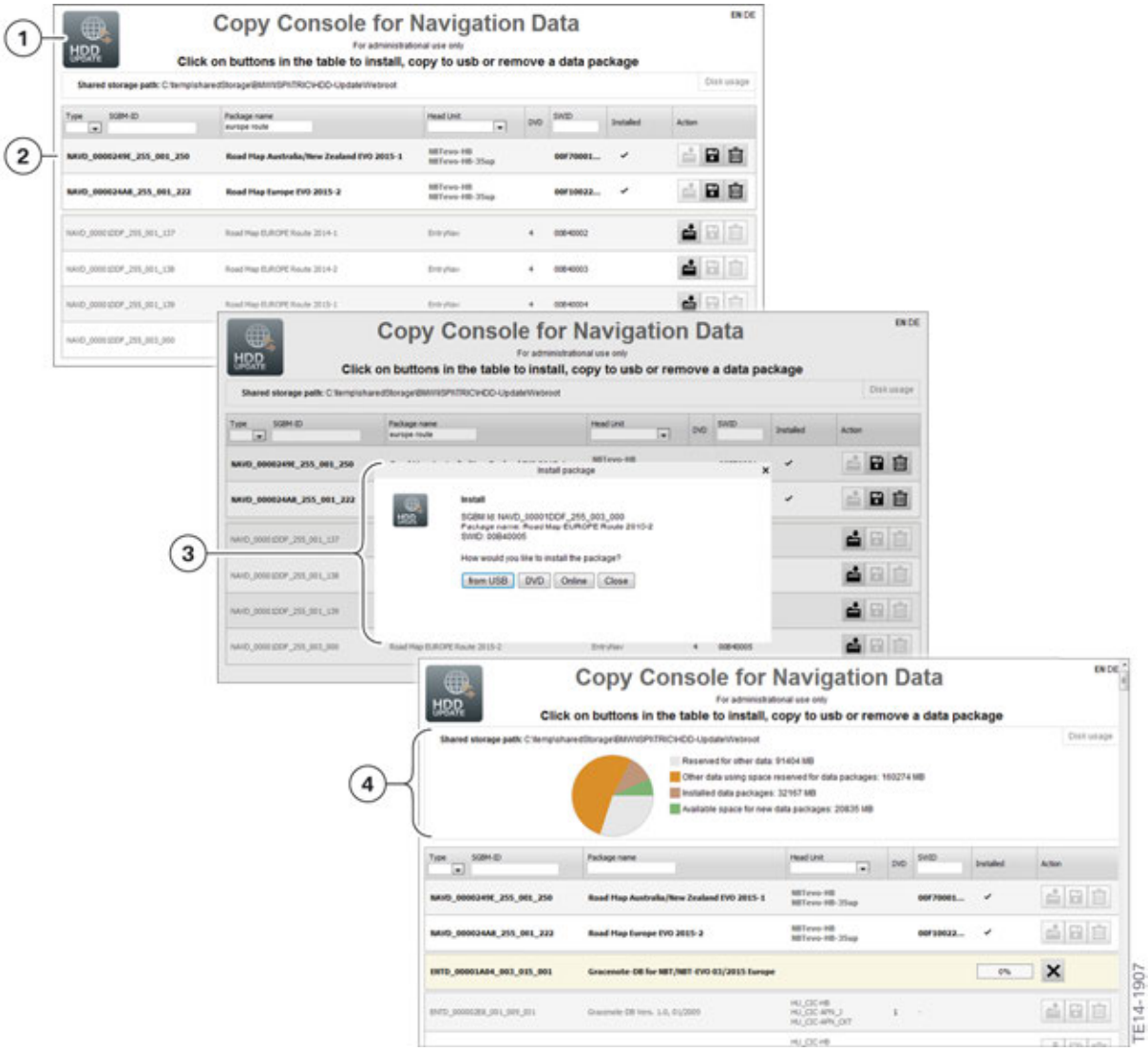

Copy console

Index	Explanation
1	Copy console for the HDD update (hard disk drive map data) of the ISPI-Admin-Toolset
2	Already available map on the shared storage (NAS server) of the service workshop
3	Installation (download) of new, additional map data onto the shared storage
4	Overview table of storage capacity on the shared storage

The map data is not invoiced to the customer (three-year map subscription). However, the working time required for the programming/updating is charged.

4.6.3. Updating by the customer

The customer can update his map data himself.

Alternatives for the customer

- Data transfer via the vehicle's USB interface using a self-created USB stick (Full Map update) in conjunction with the **ConnectedDrive Portal/Store**. There will be complete map data packages on a quarterly basis which will be made available to the customer for download via the ConnectedDrive portal.
- Data transfer via the vehicle's USB interface by means of the **USB stick** (Full Map updates, map data EVO) available from BMW Parts probably as from **2019**. Alternatively, the customer can have the current map data transferred to the vehicle by BMW Service subject to payment of the working time (Chapter 4.7.1).

ConnectedDrive Portal/Store

The ConnectedDrive Store has been offered in combination with the ConnectedDrive portal since the end of 2014.

https://www.bmw-connecteddrive.com

A prerequisite for this is that the vehicle is "mapped". In other words, the vehicle is assigned to the customer's ConnectedDrive account. Successful mapping is visible in the header with the currently displayed customer vehicle and the correct VIN.

In this ConnectedDrive store, basic and individual services can be called up using the "Ordered services" button. As from the middle of 2015, the map update function will be visible in the submenu Basic services.

The menu options "Automatic map update" and "Manual map update" (Full Map update) will then be available.

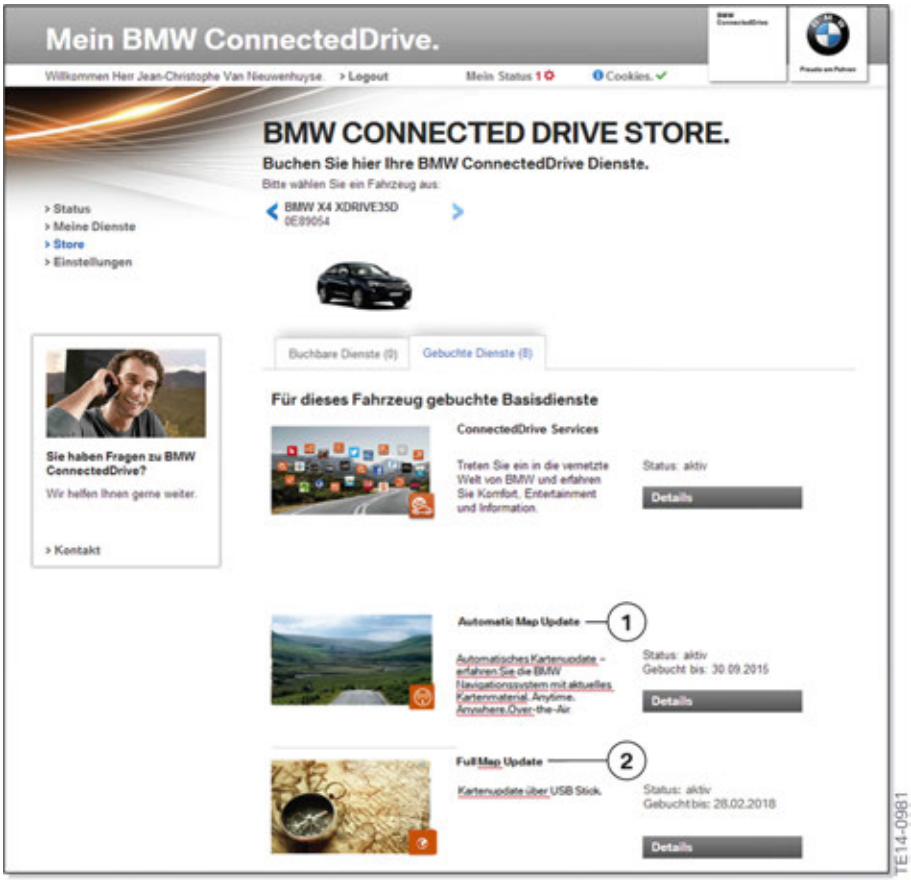

Store in ConnectedDrive portal

Index	Explanation
1	Automatic map update
2	Manual map update

In the "Automatic map update" area, it is possible to display the **region** for the respective map update and change this if necessary if the customer moves.

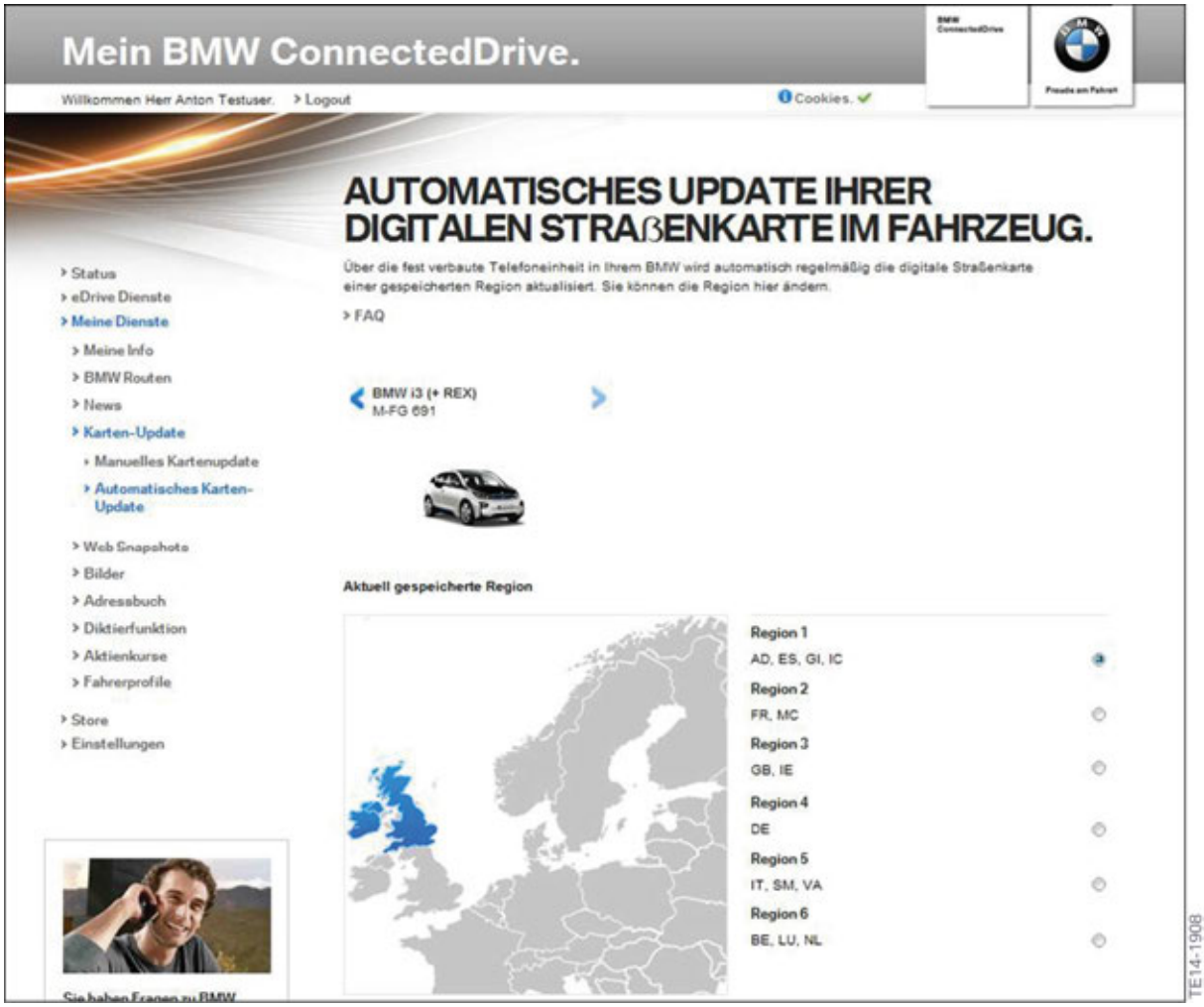

Automatic map update

An installation menu can be opened by means of a download button in the "Manual map update" area.

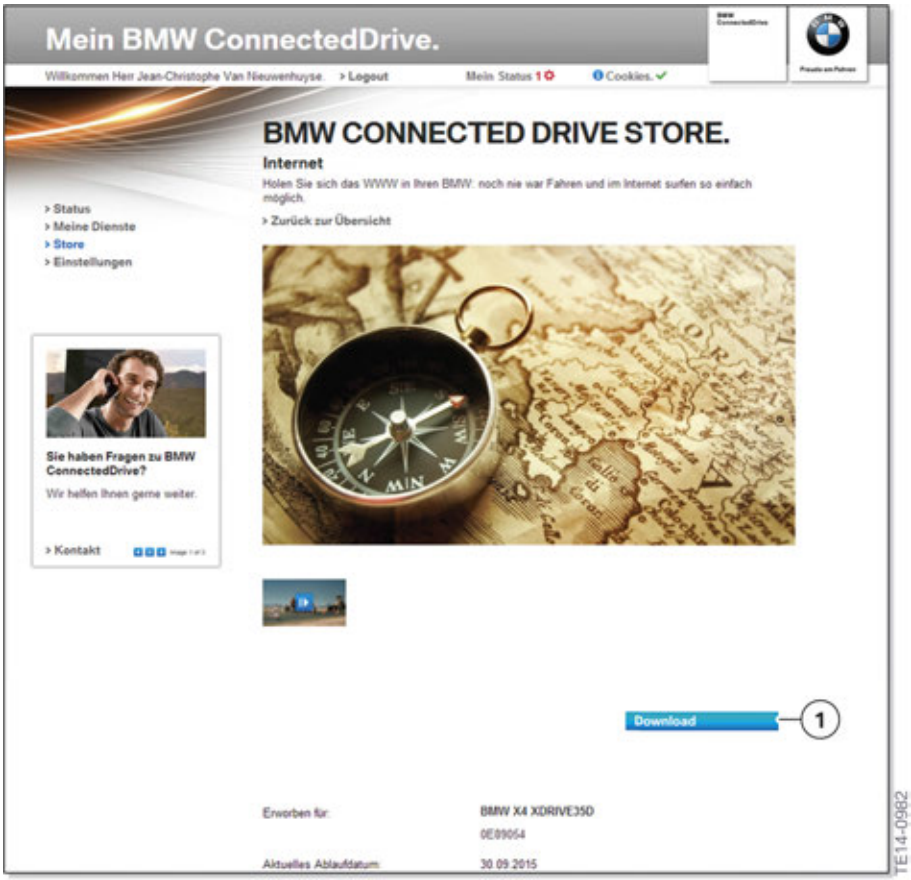

Download area in the store

Index	Explanation
1	Download installation program "BMW UPDATE MANAGER"

In the next step, the map data is loaded and saved on the PC by means of the "BMW UPDATE MANAGER" installation program. From here, the customer can copy the map data onto a USB stick and load it in the vehicle.

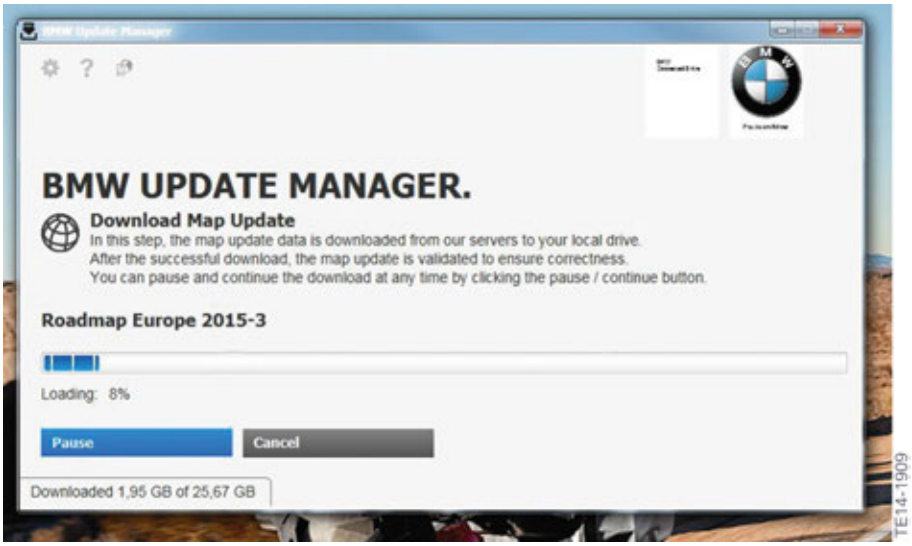

BMW UPDATE MANAGER

Parts Service

From 2019, the first map data updates for the Headunit High 2 (map data EVO) will be available for the customer via a USB stick available in BMW Parts. The first 3-year map subscriptions will expire in the middle of 2018.

Map data updating via the USB interface

Index	Explanation
1	Customer buys the USB stick in BMW Service (from 2019)
2	USB stick with current map data
3	Customer loads the map data using a USB stick and enabling code via the USB interface to the vehicle

4.6.4. Automatic updating

Partial update

An "automatic update" takes place via data streaming with an incremental map data update, without the customer having to initiate anything. Incremental means that only a certain part of the map is updated.

A prerequisite for this is an online connection via an **active SIM card** in the vehicle. The hardware of the SIM card is located in Telematic Communication Box 2 (TCB2). You can find details on the TCB2 in the "G12 Telephone and telematic systems" training manual.

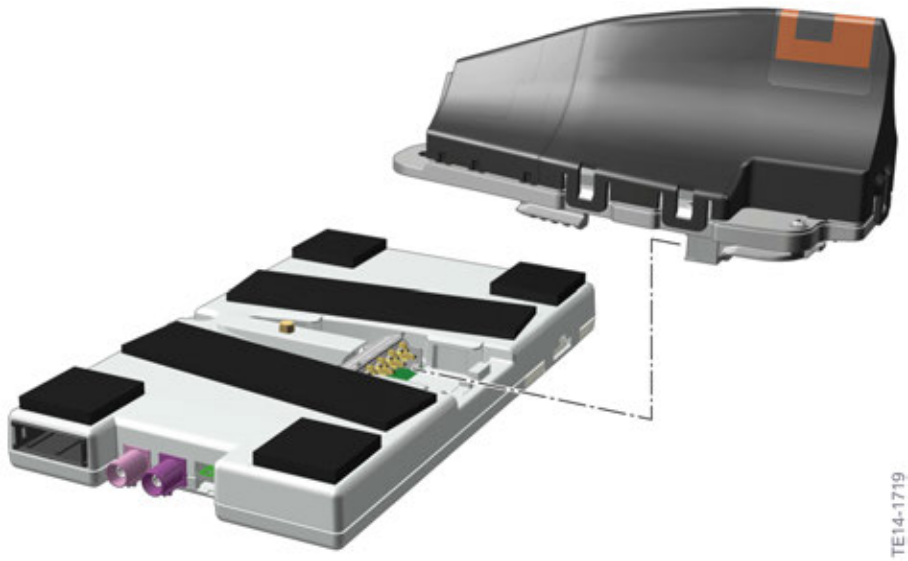

TCB2 roof-mounted version in the G12

With an activated SIM card, the ConnectedDrive Services become active with the customer's signature on the "Get Connected" form after activation by BMW AG.

The automatic update is effected without intervention from the customer, i.e. the customer does **not** have to start the update process manually.

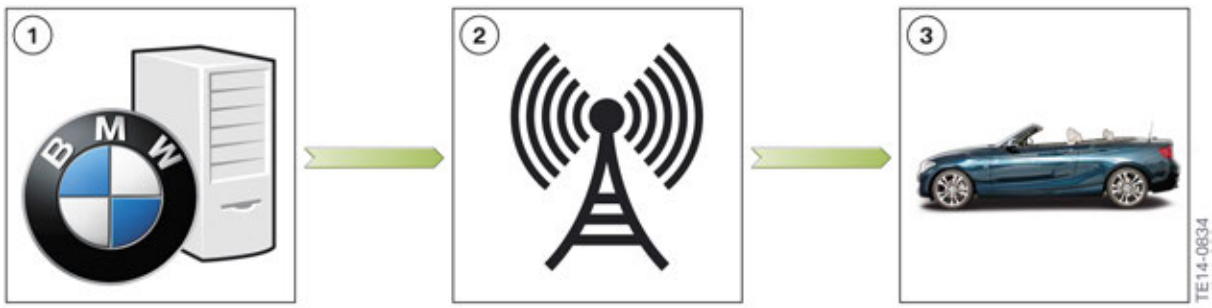

Automatic map data updating

Index	Explanation
1	BMW server with the current map data.
2	Updated map data (only some areas of the map) are transmitted online to the customer's vehicle and added to the navigation map data there.
3	Customer's vehicle with current valid ConnectedDrive contract.

With an automatic update, using the example of a European map, the complete data is not updated (about 30 GB); instead, only the current changes for each update field (max. 350 MB) are updated.

There will be only one update region for **Germany**. No matter whether the customer lives in the north, south, east, west or middle of Germany, **only** the entire map of Germany will be updated with the automatic update. The rest of the European map on the head unit is not affected by the automatic update. For customers living in the neighboring regions, a full map update of the entire map of Europe is also offered.

In **Europe**, it is planned to have a common automatic update for customers in Austria, Switzerland, Liechtenstein, Hungary, Slovenia and Croatia, for example. An individual solution will therefore be offered for each country or region in Europe.

There are also these individual solutions for the automatic update in **North America**. At the moment, approximately 11 states/regions in the US are planned for the automatic update. Among others, a region with the New England states and one with Canada and Alaska.

The exact division of which countries/regions are summarized in automatic update regions was not known at the time of the editorial deadline.

Map data on the hard disk

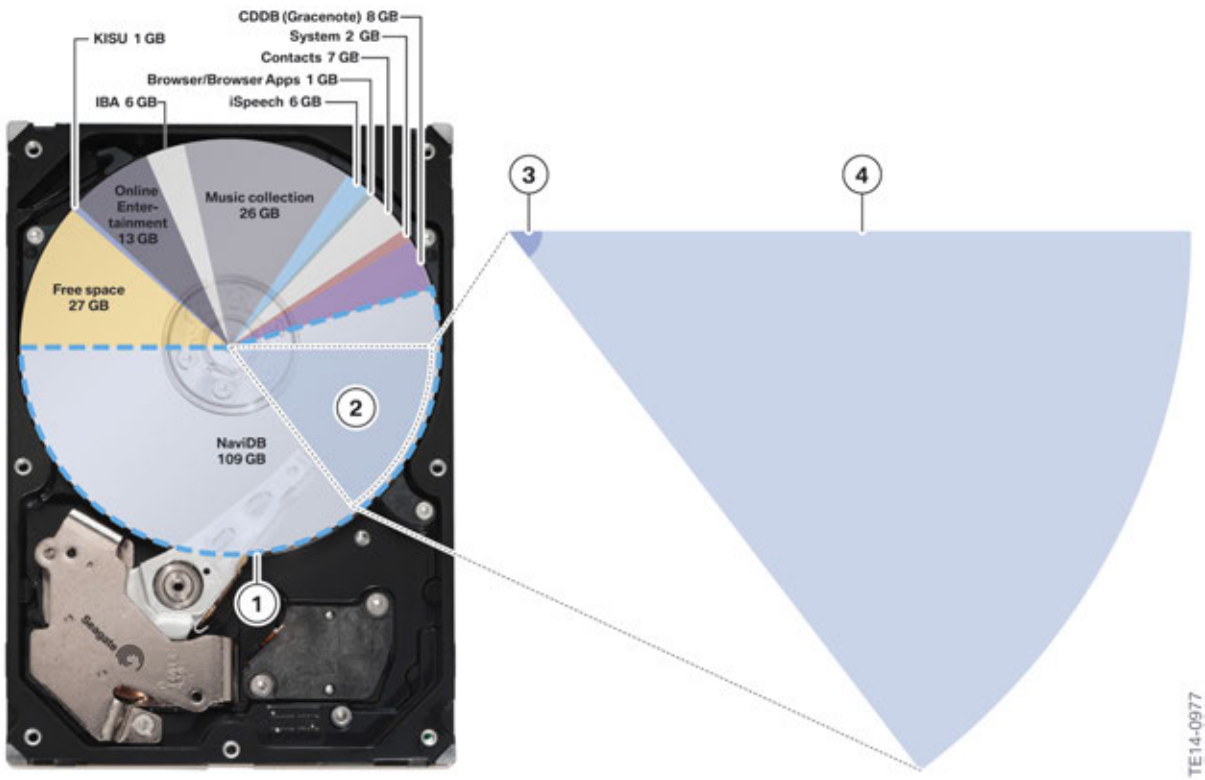

Partitioning of the hard disk of the Headunit High 2

Index	Explanation
1	Section of the partition (109 GB)
2	Map data for Europe; for example filled with about 30 GB
3	Streaming updates max. 350 MB every three months via "Automatic Map update"; according to the state, region of the customer
4	Remaining map of Europe = (29.5 GB) which is **not** automatically updated

Display in the vehicle

The map data is updated regularly and several times a year (up to four times), as soon as an updated map version is available. The progress of the update can be read on the Central Information Display.

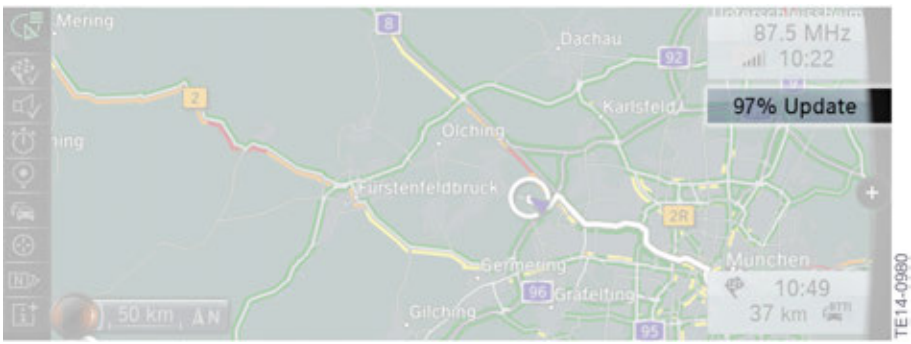

Example of automatic map updating

The minimum requirement for automatic updating is that terminal 15 is active.

If the updating is cancelled (for e.g. no data connection or end of the journey), the updating is continued as soon as terminal 15 is active again and the vehicle has re-established a data connection to the BMW server.

4.6.5. Loading the enabling code

The repair or initial enabling code FSC is still available in the ASAP portal. However, the length of the repair code or initial enabling code will change. Instead of 21 characters, an over 100-character code will now be required. However, a new process allows this to be accessed on the ASAP portal, saved on a USB stick and loaded into the head unit. FSC input via the BMW diagnosis system or BMW programming system is still possible.

G12 Audio Systems
4. HU-H2 Functions

4.6.6. Availability

Where is automatic updating possible from 2015?

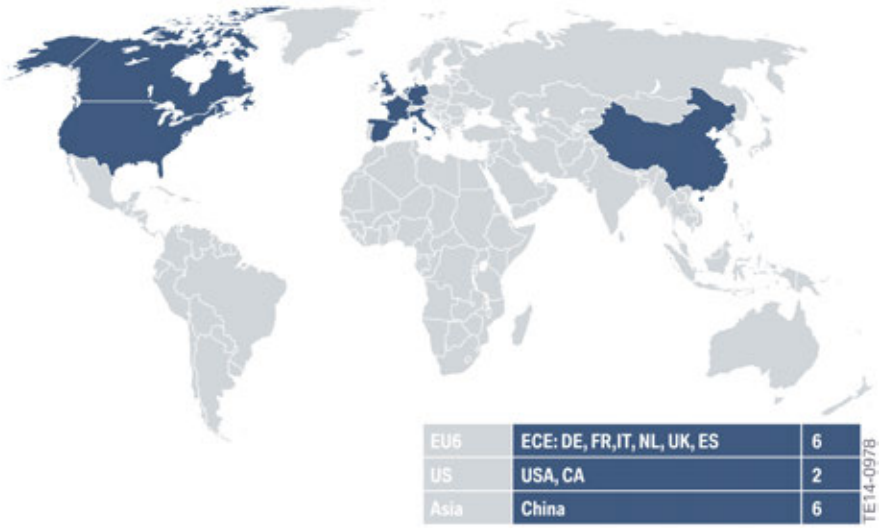

Availability of automatic update

- Germany
- United Kingdom
- Italy
- France
- Netherlands
- Spain
- US
- Canada
- China

For which markets is introduction of the Full Map update planned?

Available markets for introduction of Full Map update

G12 Audio Systems

5. Speakers and Amplifiers

5.1. Overview

Two Hi-Fi systems are offered in the G12. Each of the Two systems has a hi-amplifier which is specifically adapted for each system. The Top Hi-Fi system is the Harman Kardon Surround Sound System (SA 688) is offered as the standard system. For the first time at BMW, a High End system is offered in cooperation with Bowers & Wilkins. The High End system Bowers & Wilkins Diamond Surround Sound System (SA 6F1). A comparison of the individual Hi-Fi systems is provided below:

System	SA	Channels/ power/ speakers	Tweeters	Mid-range speakers	Bass speakers
Top Hi-Fi	688	9/600W/16	7	7	2
High End	6F1	10/1400W/16	7	7	2

5.2. Top Hi-Fi system

The Top Hi-Fi system is branded with speaker covers with the logo “harman/kardon”. It comprises 16 speakers.

G12 Audio Systems

5. Speakers and Amplifiers

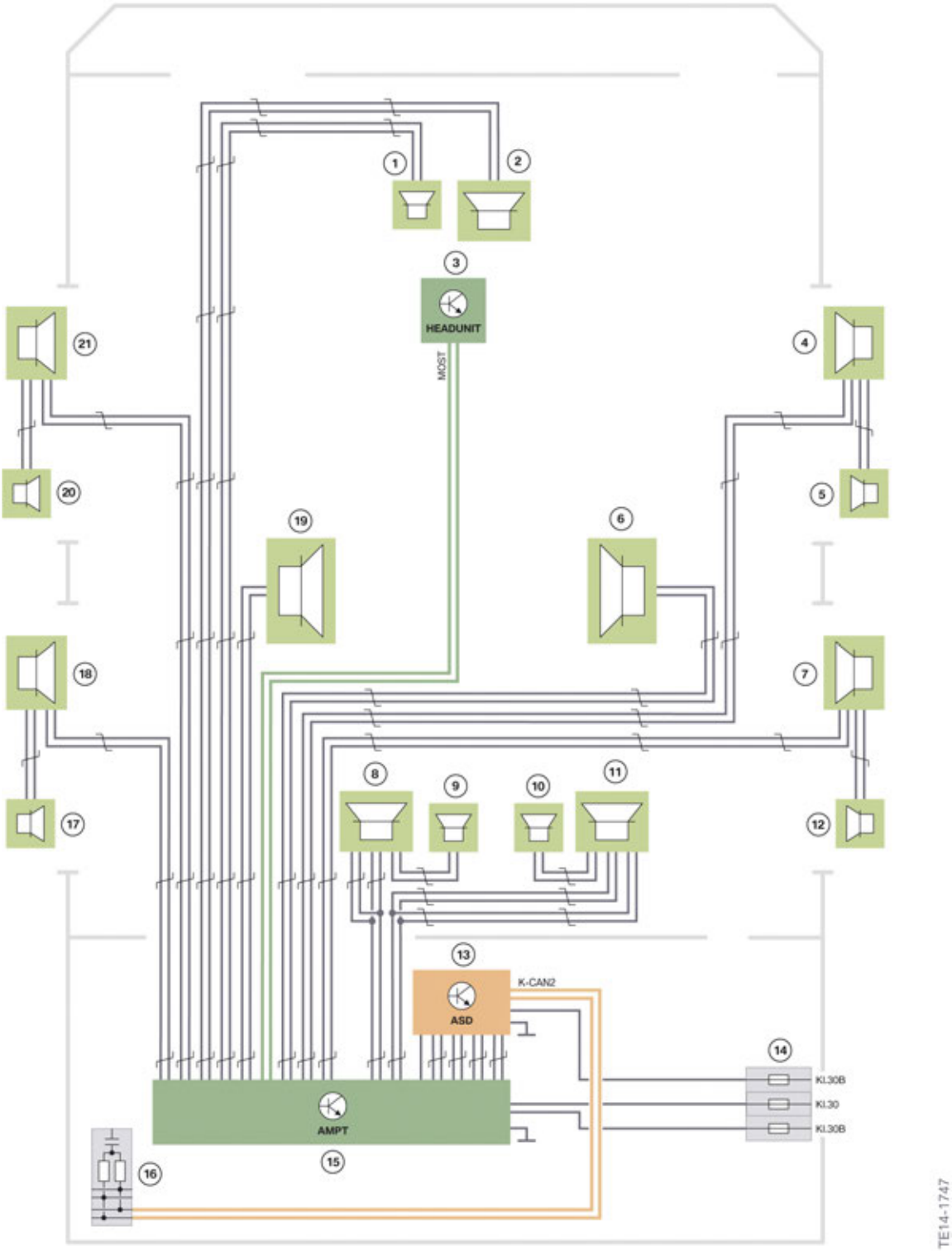

System wiring diagram, Top Hi-Fi system

G12 Audio Systems

5. Speakers and Amplifiers

Index	Explanation
1	Center tweeter in the instrument panel
2	Center mid-range speaker in the instrument panel
3	Head unit
4	Mid-range speaker in the front right door trim panel
5	Tweeter in the front right mirror triangle
6	Bass speaker “central bass” at front right under the front passenger seat
7	Mid-range speaker in the rear right door trim panel
8	Mid-range speaker in storage shelf, rear left
9	Tweeter in storage shelf, rear left
10	Tweeter in storage shelf, rear right
11	Mid-range speaker in storage shelf, rear right
12	Tweeter in the rear right door trim panel
13	Active Sound Design (ASD)
14	Power distribution box, rear
15	Amplifier Top (AMPT) (amplifier of the Top Hi-Fi system)
16	K-CAN terminator
17	Tweeter in the rear left door trim panel
18	Mid-range speaker in the rear left door trim panel
19	Bass speaker “central bass” at front left under the driver's seat
20	Tweeter in the front left door trim panel
21	Mid-range speaker in the front left door trim panel

G12 Audio Systems
5. Speakers and Amplifiers

5.2.1. Top Hi-Fi system components

Speakers

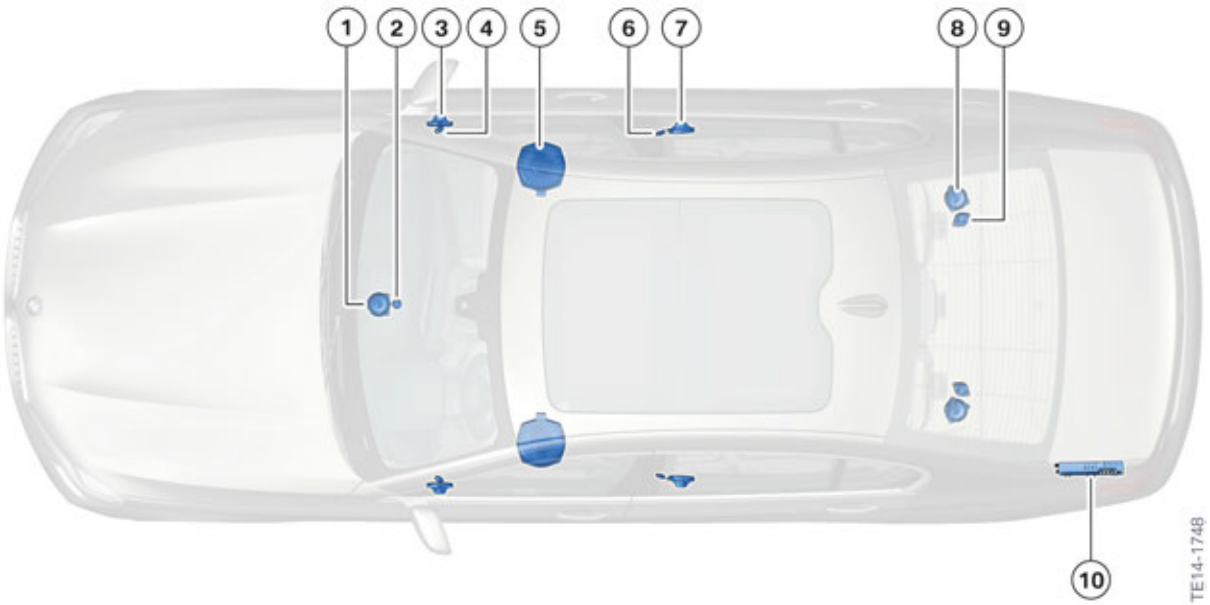

Top Hi-Fi system in the G12

Index	Explanation
1	Center mid-range speaker in the instrument panel
2	Center tweeter in the instrument panel
3	Mid-range speaker in the front right door trim panel
4	Tweeter in the front right mirror triangle
5	Bass speaker “central bass” at front right under the front passenger seat
6	Tweeter in the rear right door trim panel
7	Mid-range speaker in the rear right door trim panel
8	Mid-range speaker in storage shelf, rear left
9	Tweeter in storage shelf, rear left
10	Top Hi-Fi amplifier

G12 Audio Systems

5. Speakers and Amplifiers

Amplifier

Equalizing can be individually adjusted on the amplifier (AMPT) of the Top Hi-Fi system. The equalizer is an electronic filter for sound design. It is used for manual adjustment of frequency ranges and for compensation of linear distortion in sound signals. The Top Hi-Fi amplifier of the G12 has an output power of 600 W and is connected with the vehicle electrical system and the head unit via the MOST bus.

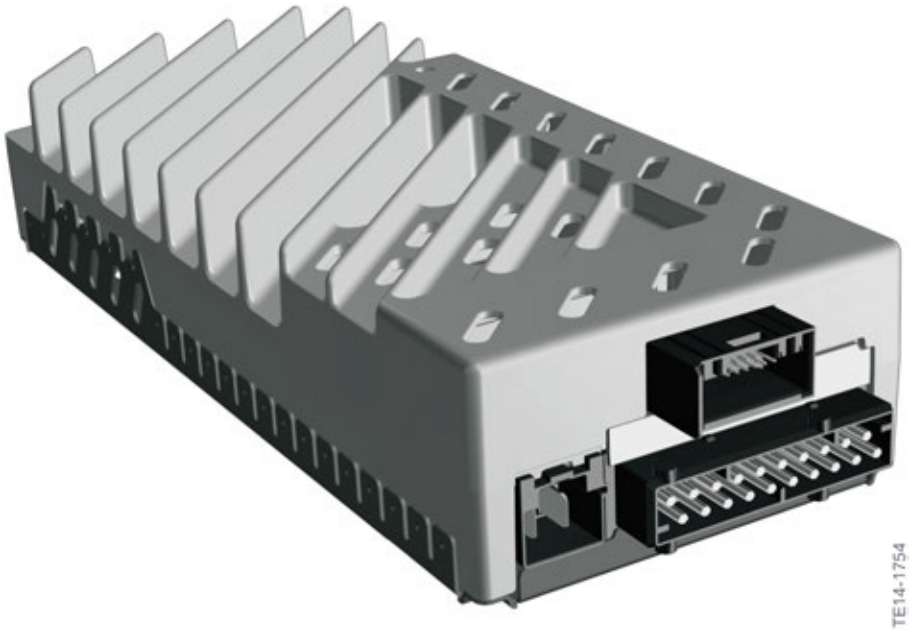

Top Hi-Fi amplifier of the G12

G12 Audio Systems

5. Speakers and Amplifiers

5.3. High End system

5.3.1. System overview

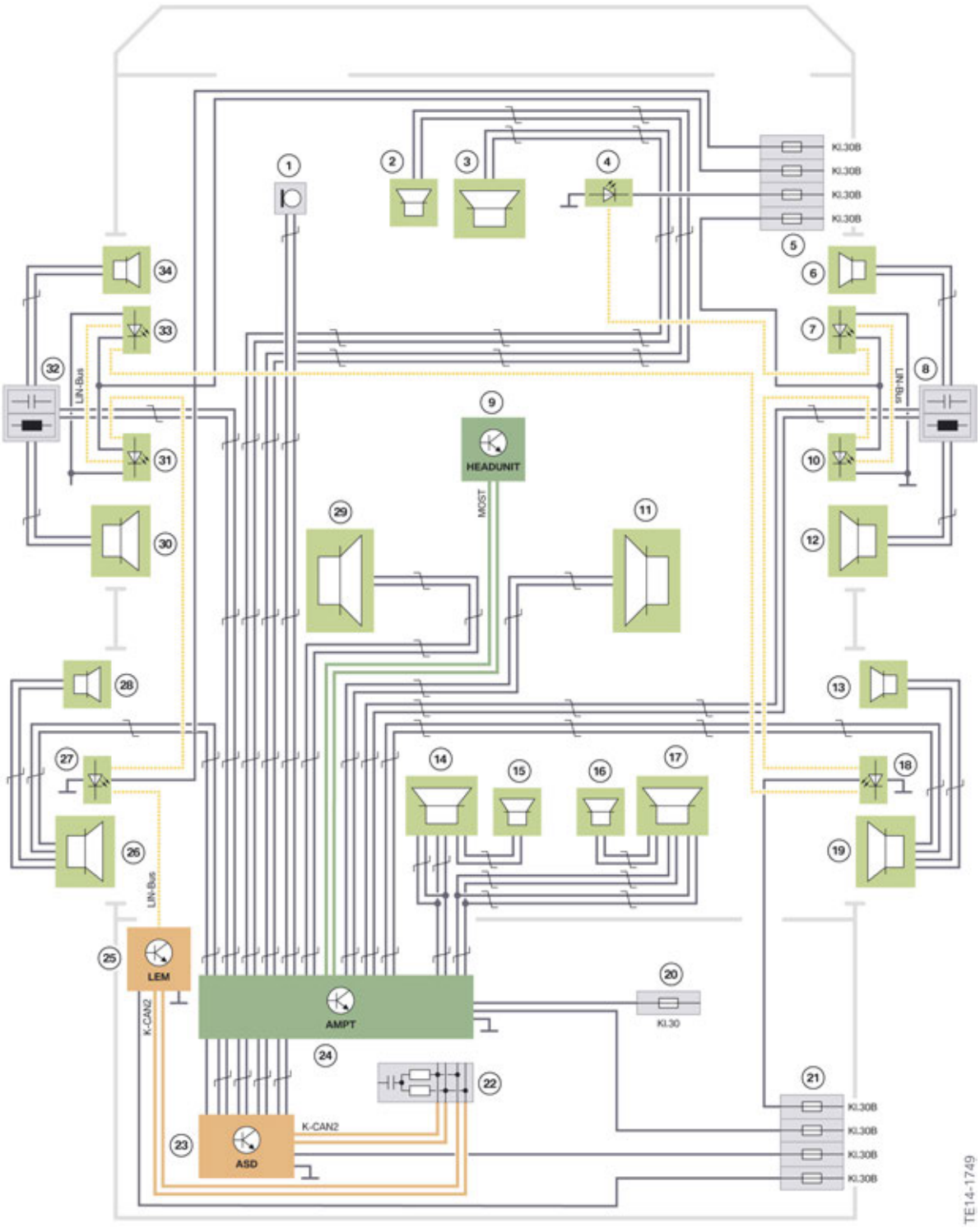

System wiring diagram of High End system in the G12

G12 Audio Systems

5. Speakers and Amplifiers

Index	Explanation
1	Microphone volume adjustment
2	Center tweeter in the instrument panel
3	Center mid-range speaker in the instrument panel
4	Center speaker LED
5	Power distribution box, front
6	Tweeter in the front right mirror triangle
7	Right mirror triangle LED
8	Analog frequency diplexer, front right door
9	Headunit High 2
10	Speaker cover LED, front right
11	Bass speaker “central bass” at front right under the front passenger seat
12	Mid-range speaker in the front right door trim panel
13	Tweeter in the rear right door trim panel
14	Mid-range speaker in storage shelf, rear left
15	Tweeter in storage shelf, rear left
16	Tweeter in storage shelf, rear right
17	Mid-range speaker in storage shelf, rear right
18	Speaker cover LED, rear right
19	Mid-range speaker in the rear right door trim panel
20	Power distribution box, battery, rear right
21	Power distribution box, rear
22	K-CAN terminator
23	Active Sound Design (ASD)
24	Amplifier Top (AMPT) (amplifier of the Top Hi-Fi system)
25	Light Effect Manager
26	Mid-range speaker in the rear left door trim panel
27	Speaker cover LED, rear left
28	Tweeter in the rear left door trim panel
29	Bass speaker “central bass” at front left under the driver's seat
30	Mid-range speaker in the front left door trim panel
31	Speaker cover LED, front left
32	Analog frequency diplexer, front left door
33	Left mirror triangle LED
34	Tweeter in the front left mirror triangle

5.3.2. Bowers & Wilkens

Bowers & Wilkins (B&W) is a company that was founded by John Bowers and Roy Wilkins in England in 1996 under the name B&W Electronics. The company mainly develops and manufactures speakers in the mid and high price segment that are used in homes as well as studios.

Since 2008, Bowers & Wilkins has also served the computer and wireless segment with its New Media series. The most well-known product in this series is the Bowers & Wilkins Zeppelin, which received the EISA Award 2008–2009 as "Best Product" in the sound station segment.

The most well-known speaker from the company is the Nautilus from 1993. The housing in the form of a snail shell accommodates a 4-way system with separate active crossover system. The speaker is the first to use the so-called Nautilus tube technology, where the sound radiated by the speaker to the rear of the housing is absorbed by the reverse-tapered horn geometry. This avoids superposition of noise produced in the housing and drivers on the music signal. In the 800 Diamond series introduced in 2010, all speakers are equipped with tweeters made of industrial diamonds.

"Bowers & Wilkins" logo and the Nautilus active speaker system

The cooperation between BMW and Bowers & Wilkins now starts with the G12. The customer can order the optional equipment High End System Bowers & Wilkins Diamond Surround Sound System (SA 6F1). A component overview in the bird's eye view of the G12 is provided below.

G12 Audio Systems

5. Speakers and Amplifiers

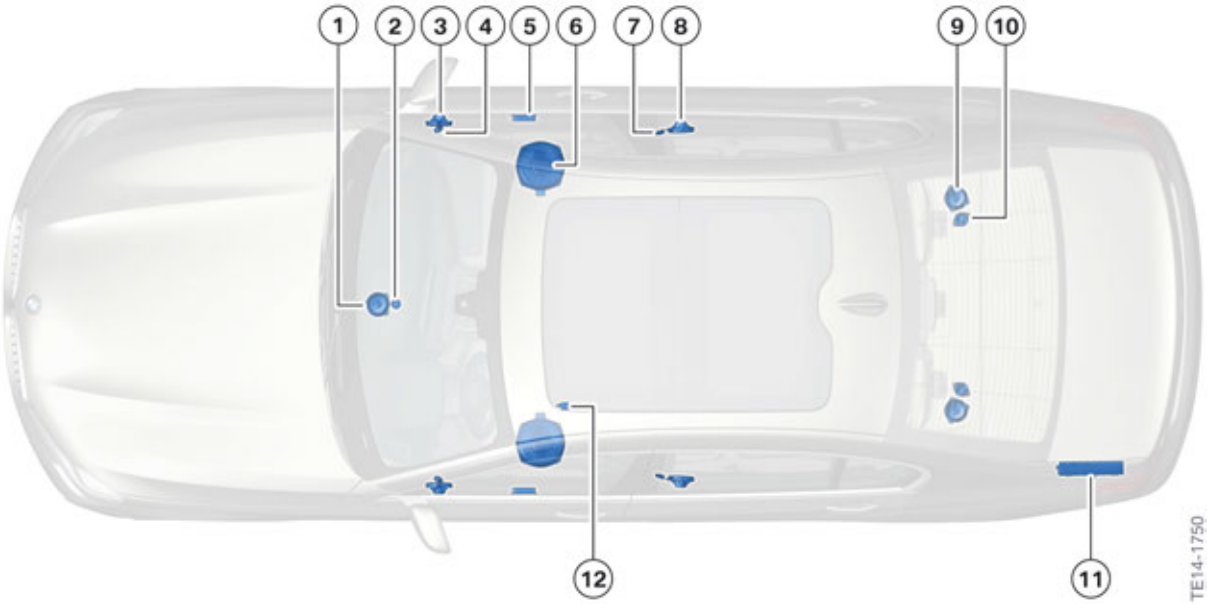

High End Hi-Fi system in the G12

Index	Explanation
1	Center mid-range speaker in the instrument panel
2	Center tweeter in the instrument panel
3	Mid-range speaker in the front right door trim panel
4	Tweeter in the front right mirror triangle
5	Analog frequency diplexer, front right door
6	Bass speaker “central bass” at front right under the front passenger seat
7	Tweeter in the rear left door trim panel
8	Mid-range speaker in the rear right door trim panel
9	Tweeter in storage shelf, rear right
10	Tweeter in storage shelf, rear right
11	High End amplifier (AMPT)
12	Microphone volume adjustment

The Bowers & Wilkins Diamond Surround Sound System differs **visually** from conventional audio systems through 2 center speakers in the instrument panel with illuminated Bowers & Wilkens logo.

All B&W speakers in the vehicle are protected by special stainless steel perforated covers. **The light staging** in the vehicle is created by the LED-illuminated speakers, which create a three-dimensional effect by means of the special hole pattern in the stainless steel covers.

G12 Audio Systems

5. Speakers and Amplifiers

Light staging with the Bowers & Wilkins Diamond Surround Sound System

In contrast to the predecessor High End system, the light staging is not controlled by the High End amplifier but by the Light Effect Manager (LEM) control unit used for the first time by BMW.

The Bowers & Wilkins Diamond Surround Sound System impresses **acoustically** with optimized sound playback to all seats for stereo and multi-channel audio formats.

It is possible to choose between 5 **sound profiles** developed by the Swedish company Dirac®.

G12 Audio Systems

5. Speakers and Amplifiers

Overview of sound profiles of the Bowers & Wilkins Diamond Surround Sound System

Studio: In Studio mode a frequency and phase correction of the speakers takes place. In this the signal is modified in both time and in the frequency range in order to compensate for various time delays and sound reflections in the vehicle depending on seating position. This leads to a linear and correctly timed playback in the passenger compartment. Through the signal fidelity formed in this way an exceptionally diverse and lively sound experience is created for all occupants. An undistorted impression is created as if you were present at the original recording in the sound studio.

Concert: The Concert mode ensures an open and lively spatial effect through special sound field modulation in the passenger compartment. This inspires the illusion that the speakers have been replaced by virtual speakers and have been moved outwards. It is similar to a music experience in a large concert hall.

On Stage: Here, the Concert mode is modified to create the impression of being on stage among the musicians instead of in the concert hall.

Cinema: The G12 is equipped with a DVD player in the head unit and a Blu-Ray player in the rear seat entertainment system. It is additionally possible to stream films from a USB stick or an Android® cell phone. The Cinema mode is optimized for this film playback mode. The Cinema mode creates a sound distribution with special Surround Sound like in the cinema.

Lounge: This mode is specially designed for rear passenger compartment occupants. The sound of the entire vehicle is optimally tailored to the rear seats.

5.3.3. Speakers of the High End system

All speakers (tweeters, mid-range and bass speakers) are connected directly to the audio amplifier or via an analog frequency diplexer. The speaker highlights of the High End system are shown below:

Speakers of the Bowers & Wilkins Diamond Surround Sound System

Index	Explanation
1	Diamond tweeter
2	Opened diamond tweeter with Nautilus™ spiral technology
3	Mid-range speaker with Kevlar® diaphragm
4	Top view of “central bass” bass speaker
5	Bottom view of “central bass” bass speaker

G12 Audio Systems

5. Speakers and Amplifiers

The **tweeters** in the front area (center or right and left in the mirror triangle) of the vehicle are equipped with tweeters made of industrial diamond. The extreme hardness of the diamond coating ensures extreme pulse fidelity and linearity even in the highest frequency ranges. The Nautilus™ spiral technology is used for the tweeters. Sound waves radiated to the rear of the housing are absorbed by the horn channels at the rear of the tweeter.

The tweeters in the rear doors and storage shelf have high-quality aluminium diaphragms.

The **mid-range speakers** are accommodated in an almost vibration-free die-cast aluminium housing and are equipped with a very high-quality neodymium magnet with the highest field strength values. The diaphragm is made of Kevlar®, a very light and extremely strong plastic fiber made of synthetic aramid fibers (man-made performance fibers).

The **bass speakers** are installed under the front seats as central bass speakers. The diaphragms made of Rohacell® foam are produced with several sandwich layers. This makes the diaphragm extremely rigid, which benefits sound output in the low frequency ranges. The neodymium magnets are also used for the bass speakers.

Analog frequency diplexers are installed in the front doors of the G12 in combination with the Bowers & Wilkins Diamond Surround Sound System. These separate the high and mid-range frequencies more precisely and with a better sound result than is possible using a single capacitor mounted on the speaker.

Discrete (with individual components) high- and low-pass filter in the analog frequency diplexer

5.3.4. High End amplifier (AMPT)

The high-end audio amplifier is a control unit in the MOST network. It is a Class D amplifier with 1400W output power.

The Class D audio output stages of the High End audio amplifier have a significantly higher efficiency than conventional Class A, B, or AB amplifiers. The power losses compared with conventional audio output stages are minimized by pulse width modulation and switched-mode transistors. A continuous voltage characteristic corresponding to the input signal is generated by a low-pass filter after the power stage.

High End amplifier (AMPT)

5.3.5. Microphone

The speed-dependent volume adjustment function used in other speaker systems (Speed Volume) is realized in the Bowers & Wilkins Diamond Surround Sound System by means of a microphone in the vehicle interior. The microphone also helps control equalizing for the Bowers & Wilkins Diamond Surround Sound System. The function is called Dynamic Equalizing Control.

The automatic adaptation takes place independently of the noise that can be heard in the passenger compartment, such as driving and wind noise. These are measured with the help of a microphone.

The microphone on the **driver' side** is used as a microphone for volume adjustment and equalizing.

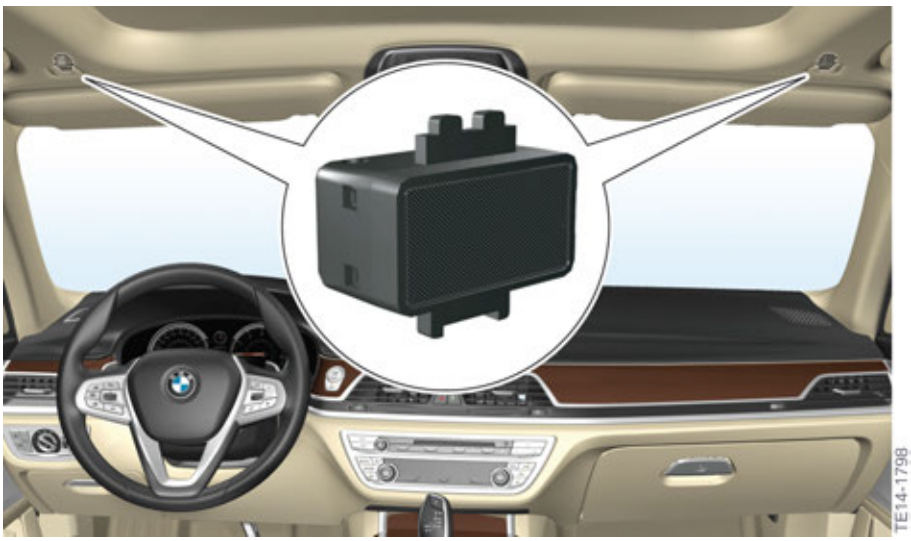

The microphone on the driver's side (left-hand drive vehicle) is used for the High End audio system in the G12

If the microphone or High End amplifier (AMPT) is replaced, the microphone must be **recalibrated** with the BMW diagnosis system.

G12 Audio Systems

6. Active Sound Design

With Active Sound Design (ASD), the sound of the respective engine is not changed but is emphasized depending on the selected driving mode.

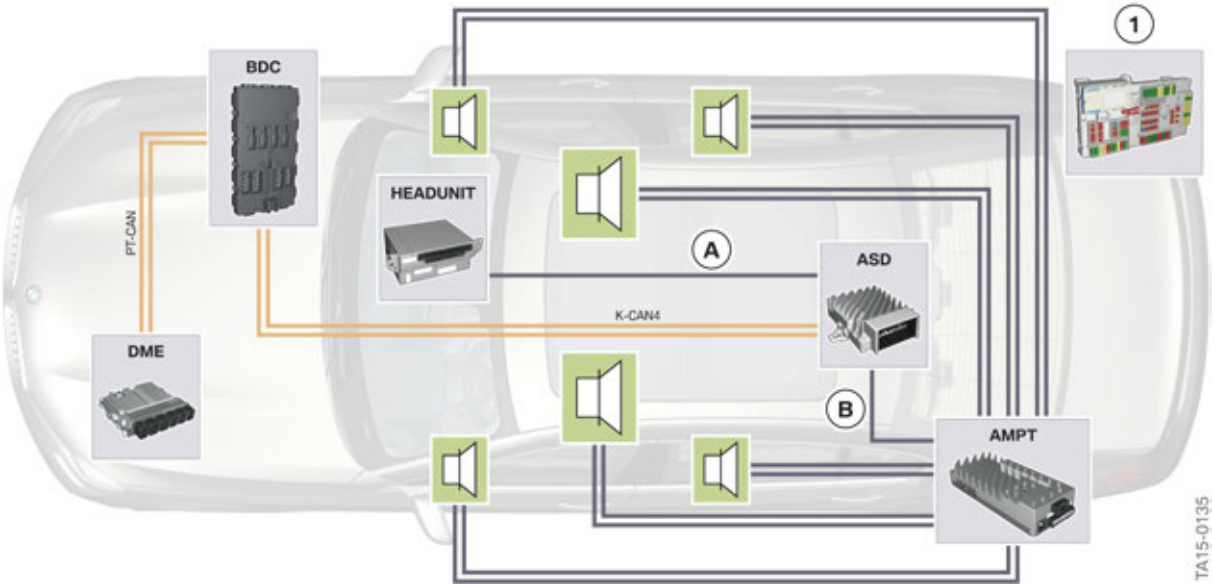

ASD in the G12

Index	Explanation
1	Rear right power distribution box
A	Audio signal of the headunit
B	Audio signal of the Active Sound Design (ASD) control unit (processed audio signal for perfect engine sound)
AMPT	Amplifier Top
BDC	Body Domain Controller
DME	Digital Motor Electronics
Head unit	Headunit High 2

The engine control unit controls the Active Sound Design (ASD) of the vehicle using characteristic data such as engine speed, load or driving speed. The ASD generates the optimum sound design for the respective driving profile and forwards these sound files to the speaker system in the vehicle interior via the Hi-Fi amplifier.

The ASD can be temporarily deactivated during a test drive (noise analysis drive) by means of the BMW diagnosis system ISTA. However, permanent deactivation of the ASD is **not** possible. If the ASD is deactivated using the BMW diagnosis system with the ISTA function "ASD muting ON", the ASD will remain switched off only until the next terminal change.

A deactivated Active Sound Design is activated again after the next terminal change.

Bayerische Motorenwerke Aktiengesellschaft
Qualifizierung und Training
Röntgenstraße 7
85716 Unterschleißheim, Germany

Technical training.
Product information.

G12 Rear Seat Entertainment

Edited for the U.S. market by:
BMW Group University
Technical Training
ST1501 9/1/2015

BMW Service

General information

Symbols used

The following symbol is used in this document to facilitate better comprehension or to draw attention to very important information:

⚠

Contains important safety information and information that needs to be observed strictly in order to guarantee the smooth operation of the system.

Information status and national-market versions

BMW Group vehicles meet the requirements of the highest safety and quality standards. Changes in requirements for environmental protection, customer benefits and design render necessary continuous development of systems and components. Consequently, there may be discrepancies between the contents of this document and the vehicles available in the training course.

This document basically relates to the European version of left hand drive vehicles. Some operating elements or components are arranged differently in right-hand drive vehicles than shown in the graphics in this document. Further differences may arise as the result of the equipment specification in specific markets or countries.

Additional sources of information

Further information on the individual topics can be found in the following:

- Owner's Handbook
- Integrated Service Technical Application.

Contact: conceptinfo@bmw.de

©2015 BMW AG, Munich

Reprints of this publication or its parts require the written approval of BMW AG, Munich

The information contained in this document forms an integral part of the technical training of the BMW Group and is intended for the trainer and participants in the seminar. Refer to the latest relevant information systems of the BMW Group for any changes/additions to the technical data.

Information status: **June 2015**
BV-72/Technical Training

G12 Rear Seat Entertainment

Contents

1. Introduction **1**
- 1.1. History 1
- 1.2. Rear seat entertainment system in the G12 2
  - 1.2.1. Offer 2
- 1.3. Variants 3
  - 1.3.1. Which optional equipment is available? 3

2. System Overview **5**
- 2.1. G12 bus overview 5
- 2.2. Wiring diagram RSE 8
- 2.3. Function profile of rear seat entertainment system 10

3. Rear Seat Entertainment System **12**
- 3.1. Components 12
  - 3.1.1. RSE control unit 12
  - 3.1.2. Front view of RSE control unit 15
  - 3.1.3. Rear view of RSE control unit 16
  - 3.1.4. Rear compartment displays 17
  - 3.1.5. Wireless headphones (KLEER®) 18
  - 3.1.6. KLEER® remote control 20
- 3.2. BMW Touch Command Tablet 21
  - 3.2.1. Overview 21
  - 3.2.2. Touch Command connection 23
- 3.3. Wi-Fi Hotspot 24
  - 3.3.1. Wi-Fi Hotspot 24
- 3.4. Functions 27
  - 3.4.1. Overview 27
  - 3.4.2. Zoning 28
  - 3.4.3. Connections 30
  - 3.4.4. Rear passenger compartment enabling 31

4. Touch Command Update **33**
- 4.1. Background 33
- 4.2. Update process 33
- 4.3. When is an update necessary? 36
- 4.4. Handbook 36

G12 Rear Seat Entertainment

1. Introduction

1.1. History

There were a number of innovations in terms of equipment and operation in the rear seat entertainment system for the F01/F02. Two different equipment specifications were available: The Rear Seat Entertainment (SA 6FG) and the Rear Seat Entertainment Professional (SA 6FH).

Two folding displays with a resolution of 800 x 480 pixels and a screen size of 8“ (SA 6FG) or 9.2“ (SA 6FH) with integrated infrared transmitter unit for wireless headphones were used in a BMW vehicle for the first time.

The infrared transmitter unit for the headphones was replaced by 2 radio interfaces for connection of 2 wireless headphones (KLEER® standard) with the F01/F02 LCI in July 2012.

The system is controlled by a radio remote control or, in the case of the High system, via the rear-compartment controller FCON.

RSE control units were integrated in the MOST bus for both systems.

Innovations for the F01/F02 included the following:

- Independent operation of driver's and passenger's sides with rear seat entertainment system.
- Navigation in 2D and 3D with navigation transfer of destination input to the driver. Route guidance started after acceptance of the suggestion by the driver.
- BMW Online and BMW Internet implemented as optional equipment in the RSE system.
- Use of the Gracenote© database with data from the Head Unit High.
- USB interface in the control unit of the RSE system available for customer use with audio and video playback from USB stick.
- A zoning concept has been implemented since 07/2012. The concept provides a clear structure for media operation in the vehicle. There are sources which can be accessed only at the front in the head unit, sources which can be accessed only in the rear in the RSE and sources that can accessed by both operating units (common media server, broadcast, etc.).

G12 Rear Seat Entertainment

1. Introduction

1.2. Rear seat entertainment system in the G12

1.2.1. Offer

With the introduction of the G12, only **one rear seat entertainment system** is now offered, the **Rear Seat Entertainment** (SA 6FR).

Rear seat entertainment system in the G12

This optional equipment package includes 2 angle-adjustable 10" rear compartment displays which can be operated independently of each other. The RSE package also contains for the first time a Touch Command tablet for operation of the system and a Blu-Ray® drive in the RSE control unit.

Many other details such as connection to the vehicle electrical system as well as the components and interfaces of the RSE system are described in Chapter 2.

G12 Rear Seat Entertainment

1. Introduction

1.3. Variants

1.3.1. Which optional equipment is available?

- The audio control for the rear passenger compartment (SA 6FK) is planned as a simple audio remote control for the rear passenger compartment which controls the head unit in the front of the vehicle. It is intended for a number of specific countries if the customer there does not want a rear seat entertainment system. However, since the radio standard is not compatible with the new RDCi, this optional equipment will be offered only for markets where RDCi is not available. This is because the systems could interfere with each other. It had not yet been decided on the editorial closing date whether this optional equipment will already be available for the launch of the G12.
- When a customer orders the **BMW Touch Command Tablet (SA 6U9)** (as part of the **ZLU-Luxury Rear Seating Package**), he receives a tablet with 7” display with separate holder and charging function (snap-in adapter) in the center armrest of the G12. The Touch Command is also used for operation of the head unit at the front and for remote control of the rear seat entertainment system via the head unit (Wi-Fi®Direct) connection.
- The optional equipment **Rear Seat Entertainment (SA 6FR)** comprises the rear seat entertainment system with two 10” display screens, RSE control unit and already includes the optional equipment **7” Touch Command Tablet (SA 6U9)**.
- The **Rear Executive Lounge Seating Package (ZRE) is a complete package (available only on the 750i G12)** and includes **Rear Executive Lounge Seating (SA 7GZ)**. It also includes both the optional equipment **Electric Reclining Seat and Footrest (SA 4F4)** as well as the **Executive Lounge Rear Center Console (SA 4F5)**. The above-mentioned optional equipment **Rear Seat Entertainment (SA 6FR)** including the **7” Touch Command Tablet (SA 6U9)** is also an important part of the package.

G12 Rear Seat Entertainment

1. Introduction

The rear passenger compartment operating elements and the rear seat entertainment system are available as follows:

Overview of rear passenger compartment operating elements G12

Index	Explanation
1	**Audio control for rear passenger compartment** (not for US)
2	**7" Touch Command Tablet (SA 6U9)** – The tablet can be used for operation of the convenience as well as the infotainment functions. In addition, it can also be used to surf on the internet when the Wi-Fi hotspot is active. A **snap-in adapter** with charging function for the tablet is installed in the rear center console.
3	**Rear Seat Entertainment Experience (SA6FR)** – With this option, the G12 is equipped with a rear seat entertainment system with two 10" display screens, an RSE control unit and a 7" Touch Command tablet (SA 6U9) including snap-in adapter with charging function.
4	**Electric Reclining Seat and Footrest (SA 4F4) –** The special passenger seat (captain's chair) with additional functions can be controlled via the 7" Touch Command Tablet. **Executive Lounge Rear Center Console (SA 4F5)** – The rear-oriented center console with oddments table and including the optional equipment 7" Touch Command Tablet (SA 6U9). Both options together in one package including the **Rear Seat Entertainment (SA 6FR)** contained in the **Rear Executive Lounge Seating (SA 7GZ).**
5	For items 3 and 4, a **special radio remote control with KLEER® standard** for the rear seat entertainment system is included in addition to the rear compartment displays, the RSE system and the Touch Command. This offers an additional operating option for the customer.

G12 Rear Seat Entertainment

2. System Overview

2.1. G12 bus overview

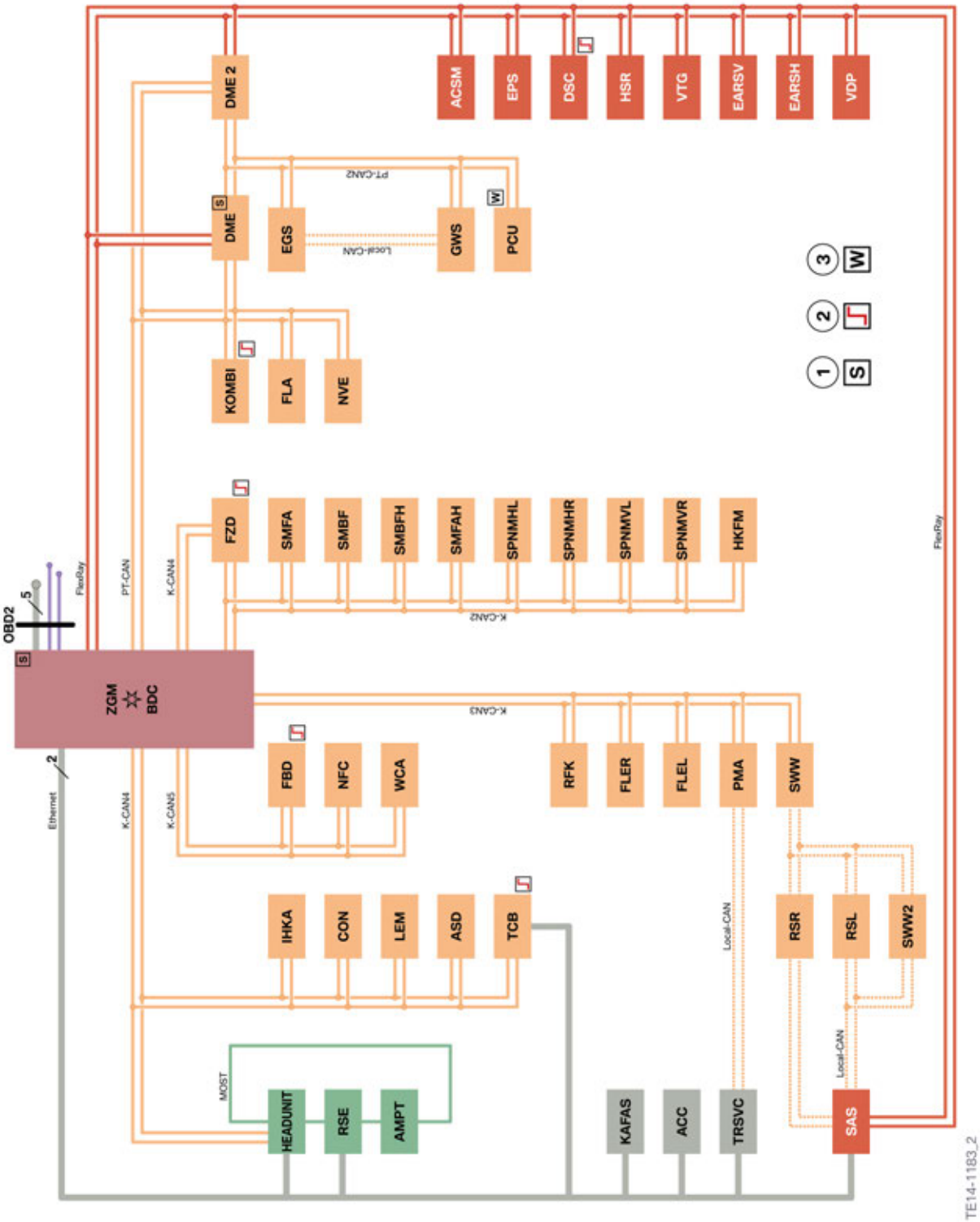

Bus overview G12

G12 Rear Seat Entertainment
2. System Overview

Abbreviation	Explanation
ACC	Active cruise control
ACSM	Crash Safety Module
AMPT	Amplifier Top (top high fidelity amplifier)
ASD	Active Sound Design
BDC	Body Domain Controller
CON	Controller
DME	Digital Motor Electronics
DSC	Dynamic Stability Control
EARSH	Electric active roll stabilization rear
EARSV	Electric active roll stabilization front
EGS	Electronic transmission control
EPS	Electromechanical Power Steering
FLA	High-beam assistant
FLER	Frontal Light Electronics Right
FLEL	Frontal Light Electronics Left
FZD	Roof function center
GWS	Gear selector
HEADUNIT	Head Unit High 2
HKA	Automatic rear air-conditioning and heating
HKFM	Tailgate function module
HSR	Rear axle slip angle control
IHKA	Integrated automatic heating / air conditioning
KAFAS	Camera-based driver support systems
KOMBI	Instrument panel
LEM	Light Effect Manager
NFC	Near Field Communication
NVE	Night Vision Electronics
PCU	Power Control Unit
PMA	Parking maneuvering assistant
RFK	Reversing camera
RSE	Rear Seat Entertainment
RSL	Radar Sensor Left (avoidance assistant)
RSR	Radar Sensor Right (avoidance assistant)
SAS	Optional equipment system
SCR	Selective Catalytic Reduction

G12 Rear Seat Entertainment

2. System Overview

Abbreviation	Explanation
SMBF	Seat module, passenger
SMFA	Seat module, driver
SMFAH	Seat module, driver, rear
SPNMHL	Seat pneumatics module back left
SPNMHR	Seat pneumatics module back right
SPNMVL	Seat pneumatics module front left
SPNMVR	Seat pneumatics module front right
SWW	Lane change warning (primary)
SWW2	Lane change warning (secondary)
TCB2	Telematic control unit 2
TRSVC	Control unit for rear view camera and SideView
VDP	Vertical Dynamic Platform
VTG	Transfer box
WCA	Wireless Charging tray
1	Start-up node control units for starting and synchronizing the FlexRay bus system
2	Control units with wake-up authorisation
3	Control units also connected at terminal 15WUP

G12 Rear Seat Entertainment

2. System Overview

2.2. Wiring diagram RSE

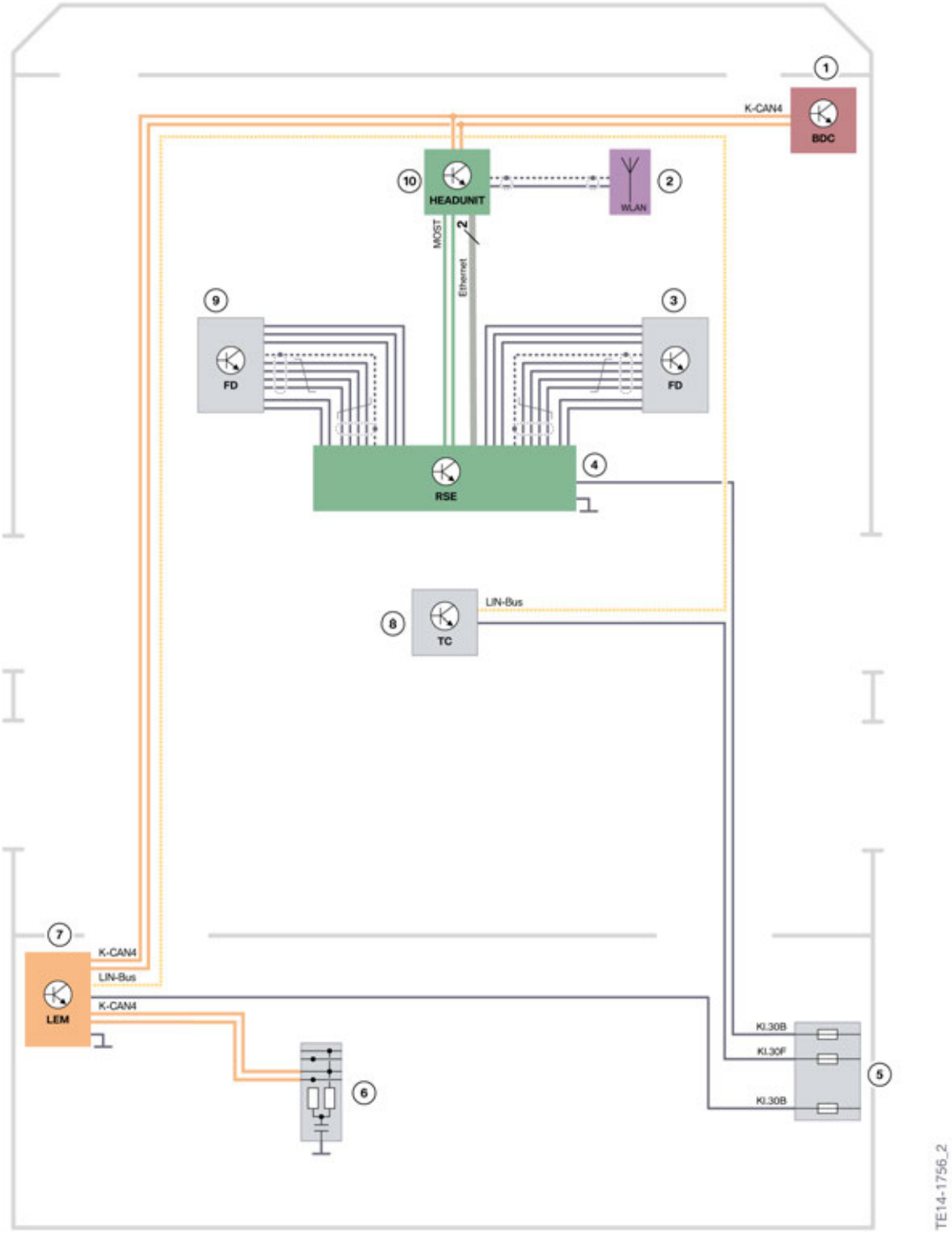

Wiring diagram RSE G12

G12 Rear Seat Entertainment

2. System Overview

Index	Explanation
1	Body Domain Controller (BDC)
2	Wi-Fi® Direct antenna on the head unit
3	Rear compartment display (FD), rear right
4	RSE control unit (rear seat entertainment)
5	Power distribution box, rear
6	CAN terminator
7	Light Effect Manager (LEM)
8	Snap-in adapter Touch Command with LIM bus connection to the LEM
9	Rear compartment display FD, rear left
10	Head Unit High 2

G12 Rear Seat Entertainment

2. System Overview

2.3. Function profile of rear seat entertainment system

The integration of the individual rear seat entertainment components in the vehicle electrical system of the G12 are shown below.

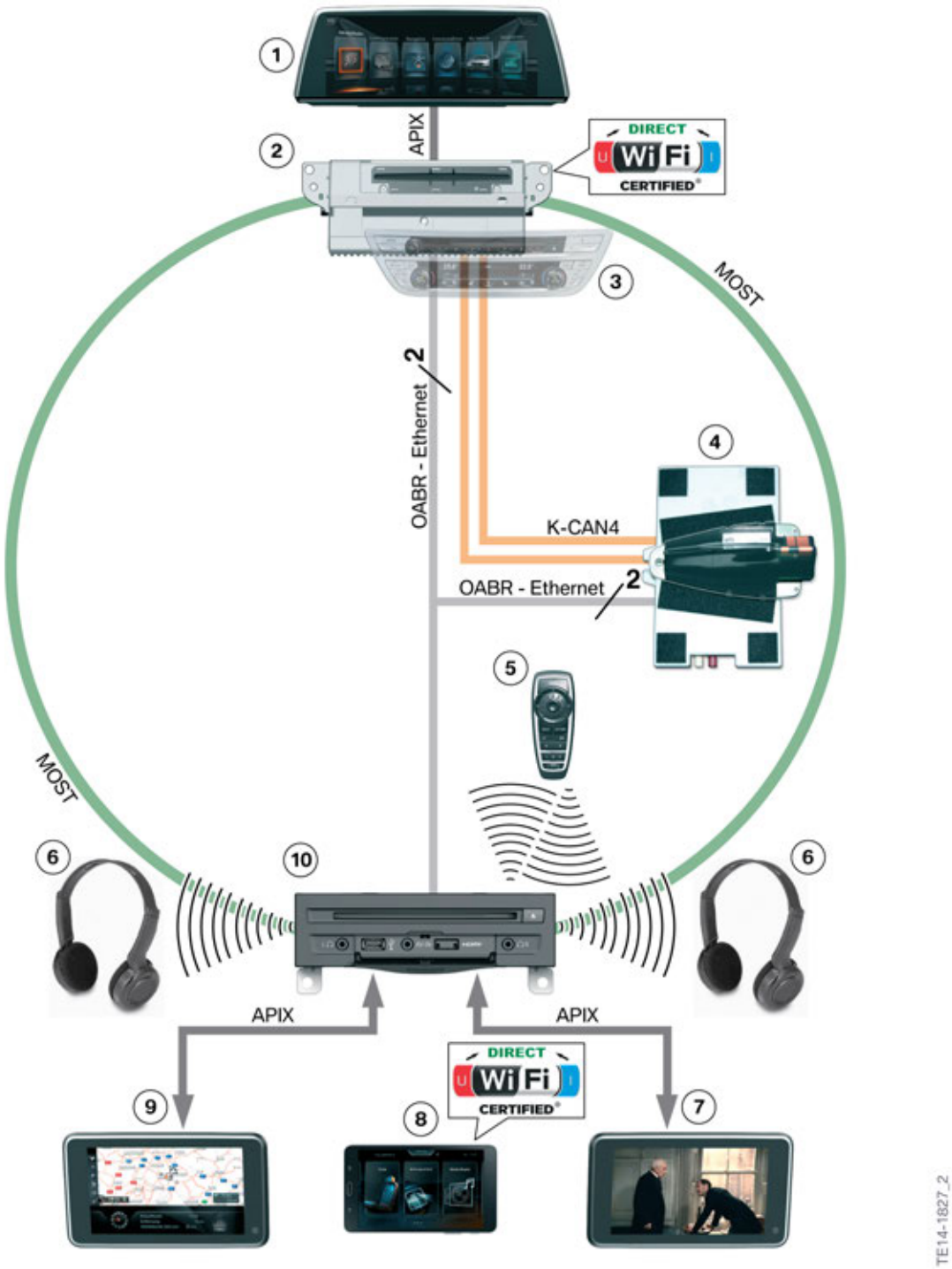

RSE integration in the vehicle electrical system of the G12

G12 Rear Seat Entertainment

2. System Overview

Index	Explanation
1	Central Information Display (CID)
2	Head Unit High 2 (HU-H2)
3	Audio control panel in center stack
4	Telematic Communication Box 2 TCB2 + roof fin with the telephone and telematic antennas
5	Rear seat remote control KLEER®
6	Wireless headphones with wireless transmission based on the KLEER® standard connected to the receiver in the RSE control unit
7	Rear compartment display FD, right
8	Touch Command (TC)
9	Rear compartment display (FD), left
10	Rear seat entertainment control unit (RSE)

G12 Rear Seat Entertainment

3. Rear Seat Entertainment System

3.1. Components

3.1.1. RSE control unit

Like in the predecessor systems, the heart of the RSE system is the RSE control unit.

In the simpler equipment specification, i.e. the Rear Seat Entertainment (SA 6FR) **without** any additional Lounge optional equipment, the RSE control unit is installed under the heating control panel for the rear passenger compartment. The front trim panel of the RSE control unit faces towards the rear passenger compartment.

Components of the rear seat entertainment system

G12 Rear Seat Entertainment

3. Rear Seat Entertainment System

Index	Explanation
1	Rear compartment display 10”, rear left
2	Central Information Display (CID), front
3	Rear compartment display 10”, rear right
4	Center stack, front center, with audio control panel and Head Unit High 2 installed behind
5	Touch Command tablet
6	KLEER® radio remote control, rear
7	**RSE control unit**

The RSE control unit is installed below the center console in the rear passenger compartment of the G12 for the optional equipment **Rear Seat Entertainment (SA 6FR)** in combination with **Electric Reclining Seat and Footrest (SA 4F4)** or the SA package **Rear Executive Lounge Seating (SA 7GZ).** The front trim panel of the RSE control unit then faces towards the front of the vehicle.

RSE control unit in combination with Lounge equipment
Installation location of RSE control unit

The RSE control unit, the head unit for the rear seat entertainment system, features an HDMI/MHL connection for external sources (games consoles, Apple® TV etc.) for the first time in the G12.
A USB interface for audio and video playback is also provided. Therefore it support a wire-based transmission of audio/videos from mobile devices to RSE displays (with the use of the correct cable).
As an analogue input, a jack socket for audio/video is now integrated instead of the previous (yellow, white and red) Cinch input.

The RSE control unit in the G12 is a completely new development and is characterized by the following technical data:

G12 Rear Seat Entertainment

3. Rear Seat Entertainment System

Hardware	Description
Equipment	
MAIN CPU	TI OMAP5@1.5GHz (2x Cortex A15)
CPU RAM (working memory)	4 GB
Flash memory	8 GB
Network/Audio CPU (sound card)	Jacinto5@720MHz
GPU (graphics card)	SGX544 MP2RC3
GPU (graphic RAM)	UMA (shared VRAM)
Periphery	OMAP5 SOC + Companion ASIC
System communication	Point2Point Links
Drive	Blu-Ray® drive
Interfaces	
OABR Ethernet connection	1 x input/output at the separate OABR connection at the rear
CVBS input	2 x CVBS inputs at the main connector at the rear
Wired headphones	2 x analogue via jack plug
Wireless headphones	2 x KLEER® 2.4 GHz digital
Display connection	2 x APIX 2 with support for max. 1280 x 720 pixels (HU-H RSE had 800 x 600)
Standard Ethernet connection	Is no longer used (no port available)
Digital video input	HDMI/MHL
Analogue video input	Jack plug for analogue audio and video
USB	USB 2.0
Max. USB charge current	2,1 A6

G12 Rear Seat Entertainment

3. Rear Seat Entertainment System

3.1.2. Front view of RSE control unit

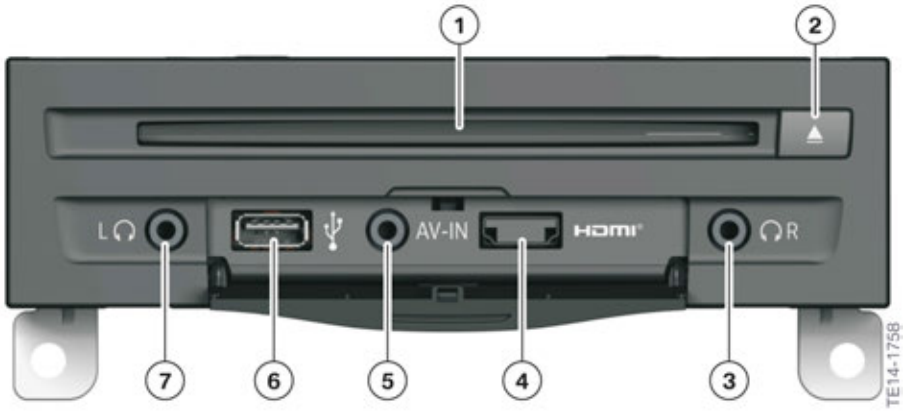

Front view RSE G12

Index	Explanation
1	Blu-Ray® drive
2	Eject button
3	Jack socket for headphones, right
4	HDMI/MHL socket
5	AV-IN socket (audio/video) for jack plug
6	USB port (USB 3.0)
7	Jack socket for headphones, left

G12 Rear Seat Entertainment

3. Rear Seat Entertainment System

3.1.3. Rear view of RSE control unit

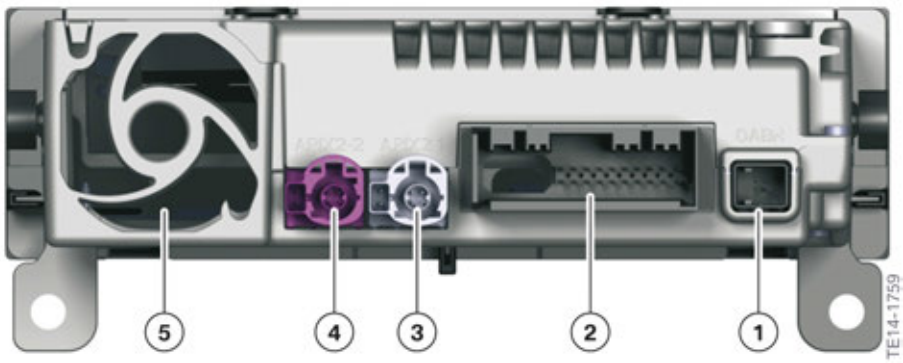

Rear view RSE G12

Index	Explanation
1	OABR Ethernet interface
2	20-pin main connector and MOST bus interface
3	Rear compartment display FD2 (left side)
4	Rear compartment display FD (right side)
5	Fan

G12 Rear Seat Entertainment

3. Rear Seat Entertainment System

3.1.4. Rear compartment displays

Completely new LC monitors in new designs and with new features were developed for the rear compartment display FD of the rear seat entertainment system in the G12. The two LC monitors are free-standing displays each with a screen size of 10” and a resolution of 1280 x 720 pixels. Like the Central Information Display (CID) in the front of the G12, the rear compartment display is now also connected directly to the RSE control unit via **APIX 2** .

The monitors have a separate ON/OFF button on the monitor.

The rear compartment displays do not have touch capability like the CID in the front.

Rear compartment display front and rear views

Index	Explanation
1	Main connector for rear compartment display voltage supply and APIX bus connection to the RSE control unit
2	APIX connection of the rear compartment display

3.1.5. Wireless headphones (KLEER®)

Wireless transmission for headphones

Whereas transmission of the audio signals in the RSE in the F01/F02 with CIC was still based on infrared technology, wireless transmission is used in the G12, as has already been the case since 07/12 with the HU-H with wireless transmission based on the KLEER® protocol, high-end wireless transmission in the 2-4 GHz range has been chosen which supports 14 channels. In contrast to conventional Bluetooth protocols, the KLEER® protocol ensures uncompressed and thus loss-free sound reproduction in the headphones. The voltage is supplied via three standard commercially available AAA batteries.

Setting options on wireless headphones

G12 Rear Seat Entertainment

3. Rear Seat Entertainment System

Index	Explanation
1	ON/OFF button with LED for ON/OFF and activation of connection setup
2	Channel selection; it is possible to change between left or right rear compartment displays at the push of a button
3	Knurled wheel for volume setting

The wireless headphones can be connected with the vehicle by a wireless connection based on the KLEER® standard. The customer can find this function under the menu "My Vehicle" in the submenu "System settings – Headphones/Remote control".

Pairing new headphones

Index	Explanation
1	Main menu "My vehicle"
2	Submenu "System settings" – Headphones

It is possible to connect a new pair of headphones here after switching on the headphones and pressing iDrive controller at the entry "Add new device".

Connection mode must now be activated **on the headphones**. This is done by pressing and holding the ON button until the LED on the headphones flashes rapidly.

After connection setup, the user is asked whether he wishes to connect the headphones with the right or left display of the rear seat entertainment system.

3.1.6. KLEER® remote control

The KLEER® remote control supplied in the vehicle together with the rear seat entertainment system has the following technical data:

Designation	Rear seat remote control KLEER®
Versions/frequencies	2.4 GHz
Series	F15, F16, G11, G12
Available with the optional equipment	Rear Seat Entertainment Experience (SA 6NH) and Executive Lounge (SA 7GZ)

Connection setup for the radio remote control takes place analogously to connection setup for the wireless headphones:

Pairing a rear passenger compartment remote control

Index	Explanation
1	Main menu "My vehicle"
2	Submenu "System settings" – Remote control

After selection of the submenu Remote control, a list with already connected devices is displayed. Now press and hold the "MENU" button and the confirmation button (center button in the selector wheel) **on the rear passenger compartment remote control** for 5 s. Two LEDs on the remote control now flash for 10 s.

As the next step, select "Connect new device" in the vehicle and confirm. The pairing function is activated and the remote control connected.

G12 Rear Seat Entertainment

3. Rear Seat Entertainment System

3.2. BMW Touch Command Tablet

3.2.1. Overview

In the latest-generation RSE system, the rear passenger compartment controller FCON is replaced by a 7” tablet based on the Android® operating system. The customer can use this **BMW Touch Command Tablet** (SA 6U9), or Touch Command for short, to control convenience functions, for operation of the rear seat entertainment system as a replacement for the rear passenger compartment controller as well as for control of the various entertainment and infotainment sources.

Touch Command tablet in the rear passenger compartment of the G12

In addition, the Touch Command can also leave the BMW interface and be operated as a standard Android® device. Surfing on the internet is then possible both via the hotspot integrated in the vehicle as well as outside the vehicle in the area covered by an external hotspot.

G12 Rear Seat Entertainment

3. Rear Seat Entertainment System

Touch Command functions in the G12

Index	Explanation
COMFORT	
1	Convenience function: massage seats and fitness programs
2	Convenience function: roller sunblinds
3	Convenience function: operation of heating and air conditioning system in rear passenger compartment
4	Convenience function: ambient lighting
ENTERTAINMENT	
5	Remote function: remote control/operation of infotainment sources
APPS	
6	Switching from the BMW user interface to a standard Android environment
TOUCHPAD	
7	In the G12, the rear seat entertainment system is operated with a touchpad on the Touch Command tablet instead of with the rear passenger compartment controller.

You can find details on operation of the Touch Command tablet in the “G12 Displays and Controls” training manual.

3.2.2. Touch Command connection

Vehicle Wi-Fi (Wi-Fi®Direct)

The Touch Command is connected to the vehicle via WLAN in two ways. Via the **Vehicle Wi-Fi (Wi-Fi® Direct)** and, if present, via the **Internet Hotspot** in connection with the standard equipment Wi-Fi Hotspot (SA 6WD).

The Touch Command is integrated in the vehicle Wi-Fi for control and monitoring functions.
The **Vehicle Wi-Fi** is a certified standard of the Wi-Fi®Alliance which is called **Wi-Fi®Direct**.

http://www.wi-fi.org

Wi-Fi®Direct is a standard for data transmission between two WLAN end devices without central Access Point. It is based on the international standard IEEE 802.11 (ISO/IEC 8802-11), which describes the properties of a wireless network.

In the G12, this data transmission always takes place by means of Wi-Fi®Direct between the head unit (with connected WLAN antenna) and the following end devices:

- Between head unit and smartphone for the “Screencast” function (see “G12 Telephone and telematic systems” training manual).
- Between head unit and Touch Command for the control and monitoring functions via tablet PC.

Wi-Fi®Direct (Vehicle Wi-Fi) streaming sources in the G12

3.3. Wi-Fi Hotspot

3.3.1. Wi-Fi Hotspot

Wi-Fi Hotspot

The Wi-Fi Hotspot (SA 6WD) is included (as a 100% option) on US market vehicles. **It is used by customer access to the internet (world wide web) from their phone while in the vehicle**. The term "Wi-Fi" is commonly used instead of WLAN. That is why the term Wi-Fi with the corresponding logo is often used in combination with the WLAN hotspot.

Wi-Fi® symbol

The hotspot is a multi-point connection similar to a home network. The hotspot performs the task of a "hub", as familiar from network technology. The customer can connect up to 10 devices to the hotspot (hub) and surf on the internet with a maximum download speed of up to 100 Mbit/s. A "Client to Client" connection is not possible. In other words, the devices cannot communicate with each other. In network terms, this means that the "hub" does not have a "bridge" function.

The hotspot function can be used by the customer in combination with an existing or additional mobile data plan. The hardware in the vehicle for the hotspot is coupled to the optional equipment **wireless charging (SA 6NW)** which includes convenient telephone (SA 6NS).

The hotspot function can be used by the customer in combination with an existing or additional cell data plan. The customer must **independently** extend the data plan with the provider in the Europe and US versions. The procedure is similar to that for booking hotspot access in a hotel or a public hotspot in a café. After the data connection is set up between the end device (smartphone, tablet PC, etc.) and the hotspot, a provider page will be displayed where the customer can independently extend the data contract.

If the booking is successful, a connection will be set up to the free, unfiltered internet via the MIMO-LTE data connection in the TCB2. TEL1 and TEL2 in the roof antenna/roof fin are defined as telematic antennas for reception. Information on this is provided in the information bulletin "G12 Telephone and telematics".

G12 Rear Seat Entertainment

3. Rear Seat Entertainment System

Data graphic of hotspot in the G12

The **hotspot** allows the customer free access to the internet for his smart devices (smartphones, tablets, PC, etc.) and also permits internet access with the Touch Command table available for the Rear Seat Entertainment.

For the first time at BMW, the emergency antenna (BACKUP or ECALL antenna) integrated in the TCB2 is used as the hotspot antenna for the hotspot in the entire vehicle interior.

G12 Rear Seat Entertainment

3. Rear Seat Entertainment System

Hotspot in the G12

The driver's position was intentionally not shown here as a Wi-Fi reception position. **When the vehicle is stationary**, the driver can of course also access the hotspot via a mobile end device (cell phone, tablet).

G12 Rear Seat Entertainment

3. Rear Seat Entertainment System

3.4. Functions

3.4.1. Overview

The functions for rear seat entertainment are structured in a similar way to the main menu of the head unit and CID in the front area of the vehicle.

Display on the rear passenger compartment display of the rear seat entertainment system in the G12

Index	Explanation
1	ConnectedDrive browser function in the rear seat entertainment system (internet)
2	Navigation map display in the rear seat entertainment system in the G12
3	Overview of main menu for rear seat entertainment in the G12; main menu selection Communication
4	Music source "Guns N' Roses", playback in rear seat entertainment system; selection "HDMI Rear" from the favorites menu in the rear seat entertainment system

3.4.2. Zoning

To simplify operation of entertainment devices in the driving area and rear area of the passenger compartment for the customer, a **simple control concept was defined for media operation** through "zoning".

Media that are inserted, plugged in or streamed to the head unit at the front, in the driving area or head unit area of the vehicle, can be operated and played back at the front by means of the controller or CID on the Head Unit High 2.

There is also a zone whose sources can be accessed jointly at the front and rear of the vehicle.

Media that are inserted or plugged into the RSE control unit in the rear passenger compartment can be operated and played only via the Touch Command or KLEER® remote control.

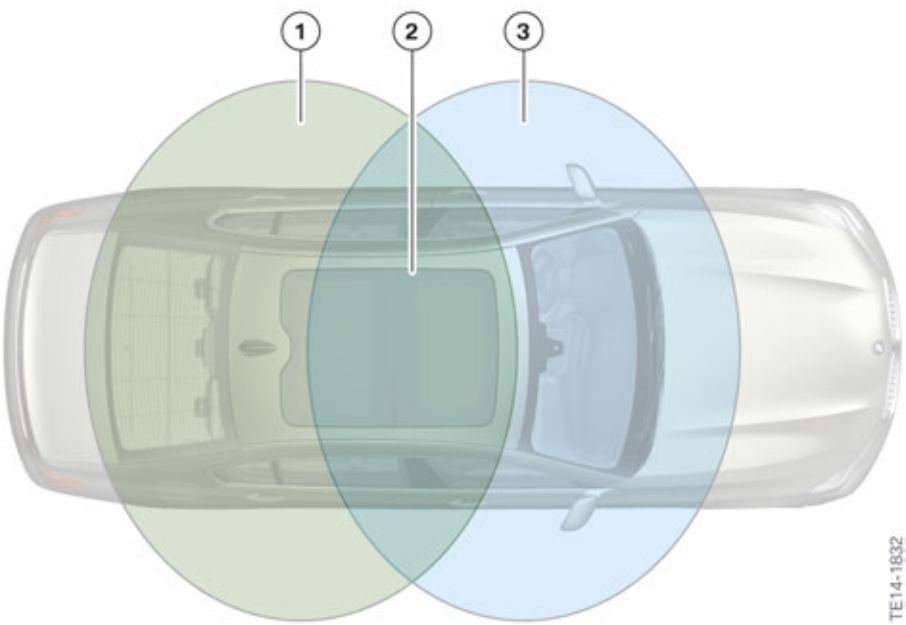

Zoning concept of the G12

G12 Rear Seat Entertainment

3. Rear Seat Entertainment System

Index	Explanation
1	**RSE zone (rear of vehicle):** Blu-Ray® drive in the RSE control unit, MHL +HDMI external devices, USB interface in the RSE control unit, AUX-In + AV-In in the RSE control unit
2	**Combined zone:** Broadcast media such as Radio, Entertainment Server (music collection), browser (with available ConnectedDrive service Internet (SA 6AR), integrated operating instructions IBA, Screencast via Wi-Fi®Direct
3	**Head unit zone (front of vehicle):** Head unit DVD drive, head unit USB interface(s), wireless (wireless sources such as Bluetooth audio streaming, apps, etc.); Online Entertainment

G12 Rear Seat Entertainment

3. Rear Seat Entertainment System

3.4.3. Connections

The following illustrations are intended to briefly show the difference between pairing devices by means of Vehicle Wi-Fi (Wi-Fi® Direct) and connecting devices by means of the hotspot.

Connection setup in the G12

Index	Explanation
1	Settings menu and activation menu for external sources
2	**Activation of Vehicle Wi-Fi (Wi-Fi® Direct)**
2a	Activation in the vehicle
2b	Selection of a connection to a Touch Command tablet
2c	Search on the tablet for the Wi-Fi connection in the vehicle with the respective VIN identification
3	**Activation of the hotspot in the vehicle**

G12 Rear Seat Entertainment

3. Rear Seat Entertainment System

Index	Explanation
3a	Activation in the vehicle
3b	Selection to transmit a hotspot ID
3c	Display of hotspot name and hotspot key in the vehicle
3d	Connection at external device to the vehicle hotspot

3.4.4. Rear passenger compartment enabling

The selection is made in the main menu "My Vehicle" in the submenu "System settings" – "Rear-seat entertainment".

Rear passenger compartment enabling

Index	Explanation
1	Main menu "My vehicle"
2	Submenu "System settings"– Rear-seat entertainment

The following are available for selection:

Limited (only Media/Radio)
If the same entertainment source is selected at the front and rear, no further settings can be made for this source. For example, if the radio is playing at the front and rear, the station can be changed only at the front. The entertainment source selected at the front is output via the speakers. The entertainment source selected at the rear can be output only via headphones. Only the following function can be accessed at the rear in this setting: "Media/Radio"
Enable rear-seat control

If the same entertainment source is selected at the front and rear, settings can be made for this source at both front and rear.
Rear seat entertainment off
Rear seat entertainment is switched off and can no longer be activated from the rear passenger compartment.
Volume limitation
Volume limitation can be activated from the front for the rear passenger compartment.

Serving function

In addition, the driver/front passenger can also "serve" a function to the rear seat entertainment system. One or both rear compartment displays are then selected under the main menu "Media/ Radio" in the submenu "Rear". Only entertainment sources are available for the "serving" function.

Language settings

A special feature applies when the vehicle language is changed. If the vehicle language is changed, the Touch Command connected via Wi-Fi®Direct is also rebooted and the Touch Command tablet starts in the changed language variant of the vehicle.

⚠

Changing the language version in the Android® application of the operating system of the Touch Command tablet (apps installed on the Touch Command tablet) does not influence the set vehicle language of the tablet.

G12 Rear Seat Entertainment

4. Touch Command Update

4.1. Background

The Touch Command Tablet is downwardly compatible and can therefore communicate with all vehicle electrical system versions and integration levels that support a Touch Command. This communication basis is lost, however, if the vehicle electrical system is programmed to a higher integration level by the BMW programming system. The Touch Command Tablet must then also be programmed. It is updated via a special program, the **Touch Command Service Updater (TCSU)**. This is distributed to the shared storage of the BMW service workshop via an online update. A current driver program for Android® tablets from SAMSUNG® is made available together with the TSCU.

Among other things, the cached navigation map data is also stored on this shared storage, a small, autonomous NAS server. Programming via the BMW programming system (ISTA/P or ISTA Next) is not planned.

4.2. Update process

The Touch Command tablet is switched to download mode by means of a key combination described in the **TCSU** manual. The Touch Command is then connected with the PC or laptop on which **TCSU.exe** is located. In the next step TCSU.exe is launched on the laptop. The update program Touch Command Service Updater runs separately here as **TCSU.exe** without installing itself in the operating system when executed.

If the tablet is not shown as added, this may be due to too many apps being active. Please close all apps on the Touch Command and restart the process. The same applies to the Windows PC if too many programs are being run here simultaneously.

The package is offered in WUSS for BMW branches that require the admin rights for installation of the driver!

G12 Rear Seat Entertainment

4. Touch Command Update

Update process via the TCSU

Index	Explanation
1	Android tablet “Touch Command” in download mode
2	USB connection with original cable for from the BMW range “Parts and Accessories” (EPC: 61 12 2 336 423)
3	Application TCSU.exe run on workshop PC or laptop or on ISSS Next

A successfully connected Touch Command that has been recognized by the system is added both in the grid as a yellow-marked device (e.g. COM8) and in the message window.

G12 Rear Seat Entertainment

4. Touch Command Update

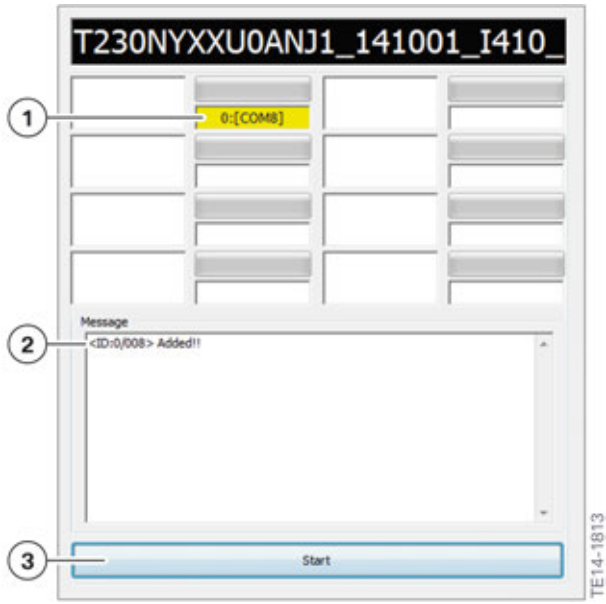

Executed TCSU.exe application

Index	Explanation
1	Android® device was detected, visible by display of the yellow window
2	Message window with the information that an Android device has been successfully found: “ID XXX Added!”
3	Start button

Download to the Android Touch Command device starts after pressing the Start button. The download is accompanied by a green progress bar. The individual steps are shown below:

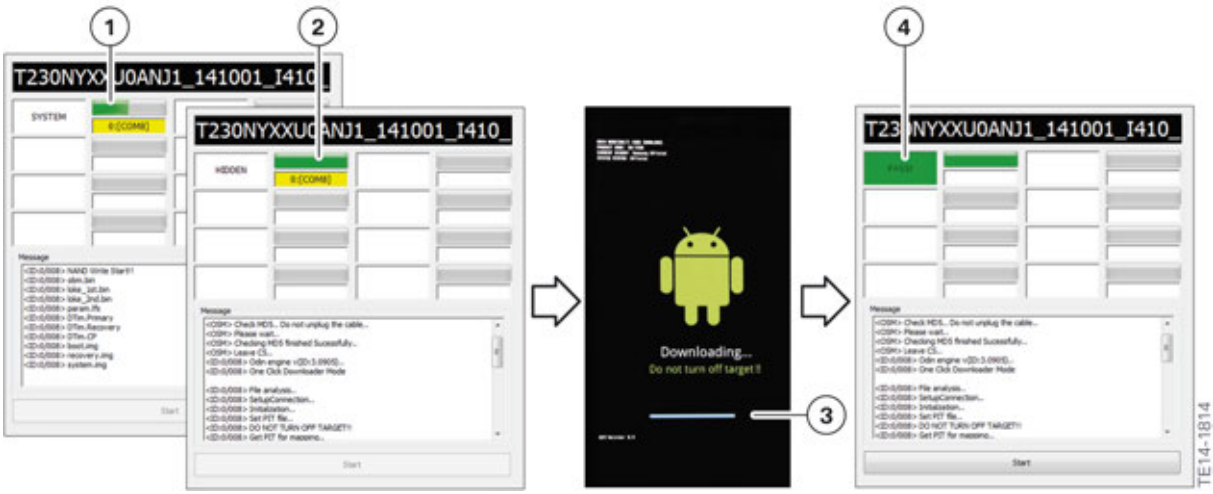

Update process

Index	Explanation
1	Start update process
2	Update process leads to restart on the Android tablet “Touch Command”
3	Touch Command restarts
4	The message “PASS!” is displayed after a successful Touch Command restart and a last check. The update was successful and the Touch Command device can be removed.

4.3. When is an update necessary?

An update of the Touch Command tablet must be performed in the following cases:

1 Entered fault code and corresponding instruction from the BMW diagnosis system.

2 After programming the vehicle to a new integration level if the fault "Vehicle compatibility problem" is entered in diagnosis.

3 In the event of a customer complaint.

4 As necessary in the event of available security updates.

4.4. Handbook

A detailed description of programming the Touch Command tablet is provided in the handbook. Since it had not yet been decided at the time of editorial closing where the handbook will be available for download for the dealer organization.

Bayerische Motorenwerke Aktiengesellschaft
Qualifizierung und Training
Röntgenstraße 7
85716 Unterschleißheim, Germany

Technical training.
Product information.

G12 Climate Control

Edited for the U.S. market by:
BMW Group University
Technical Training
ST1501 6/1/2019

BMW Service

General information

Symbols used

The following symbol is used in this document to facilitate better comprehension or to draw attention to very important information:

⚠

Contains important safety information and information that needs to be observed strictly in order to guarantee the smooth operation of the system.

Information status and national-market versions

BMW Group vehicles meet the requirements of the highest safety and quality standards. Changes in requirements for environmental protection, customer benefits and design render necessary continuous development of systems and components. Consequently, there may be discrepancies between the contents of this document and the vehicles available in the training course.

This document basically relates to the European version of left hand drive vehicles. Some operating elements or components are arranged differently in right-hand drive vehicles than shown in the graphics in this document. Further differences may arise as the result of the equipment specification in specific markets or countries.

Additional sources of information

Further information on the individual topics can be found in the following:

- Owner's Handbook
- Integrated Service Technical Application.

Contact: conceptinfo@bmw.de

©2015 BMW AG, Munich

Reprints of this publication or its parts require the written approval of BMW AG, Munich

The information contained in this document forms an integral part of the technical training of the BMW Group and is intended for the trainer and participants in the seminar. Refer to the latest relevant information systems of the BMW Group for any changes/additions to the technical data.

Information status: **June 2019**
Technical training.

G12 Climate Control

Contents

1. Introduction **1**
- 1.1. In general 1
- 1.2. Refrigerant 1
- 1.3. Overview 1
  - 1.3.1. Zones 1
  - 1.3.2. Operating elements 2

2. Cooling Circuit **4**
- 2.1. Overview 4

3. Refrigerant Circuit **5**
- 3.1. Overview 5
- 3.2. A/C compressor 6
- 3.3. Evaporator with Accumulator 6
- 3.4. Refrigerant lines (inner heat exchanger – IWT) 7
- 3.5. Coolant-cooled air conditioning condenser 8

4. Functions **12**
- 4.1. 4-zone automatic heating/air conditioning 12
  - 4.1.1. Wiring diagram 13
  - 4.1.2. 4-zone IHKA control panel 15
  - 4.1.3. Layering 16
  - 4.1.4. 4-zone IHKA control panel for rear passenger compartment 17
  - 4.1.5. Touch Command 18
  - 4.1.6. Air treatment 18

G12 Climate Control

1. Introduction

1.1. In general

The climate control system in the new G12 BMW 7 Series has been updated from previous systems. A newly developed 4 zone heating and air-conditioning unit is used on all G12 models.

A brushless blower motor integrated into the heating and air-conditioning unit provides the supply of fresh air to the vehicle interior via 2 microfilters. The microfilters as well as the blower motor can be accessed from the right footwell.

The IHKA control unit is part of the heating and air-conditioning control panel.

Work on heating and air-conditioning systems must only be performed by competent and qualified personnel. Workshop personnel performing activities in connection with heating and air-conditioning systems in vehicles require a certificate of training.

1.2. Refrigerant

In the US market R134a will still be used. R1234yf will be used in the G12 starting in 03/16, and in the remaining US vehicles from 07/16.

1.3. Overview

The 4-zone version of the integrated automatic heating/air conditioning system (IHKA) is installed in the G12. No other IHKA options are available at the start of production.

1.3.1. Zones

G12 Climate Control

1. Introduction

4-zone automatic heating/air conditioning

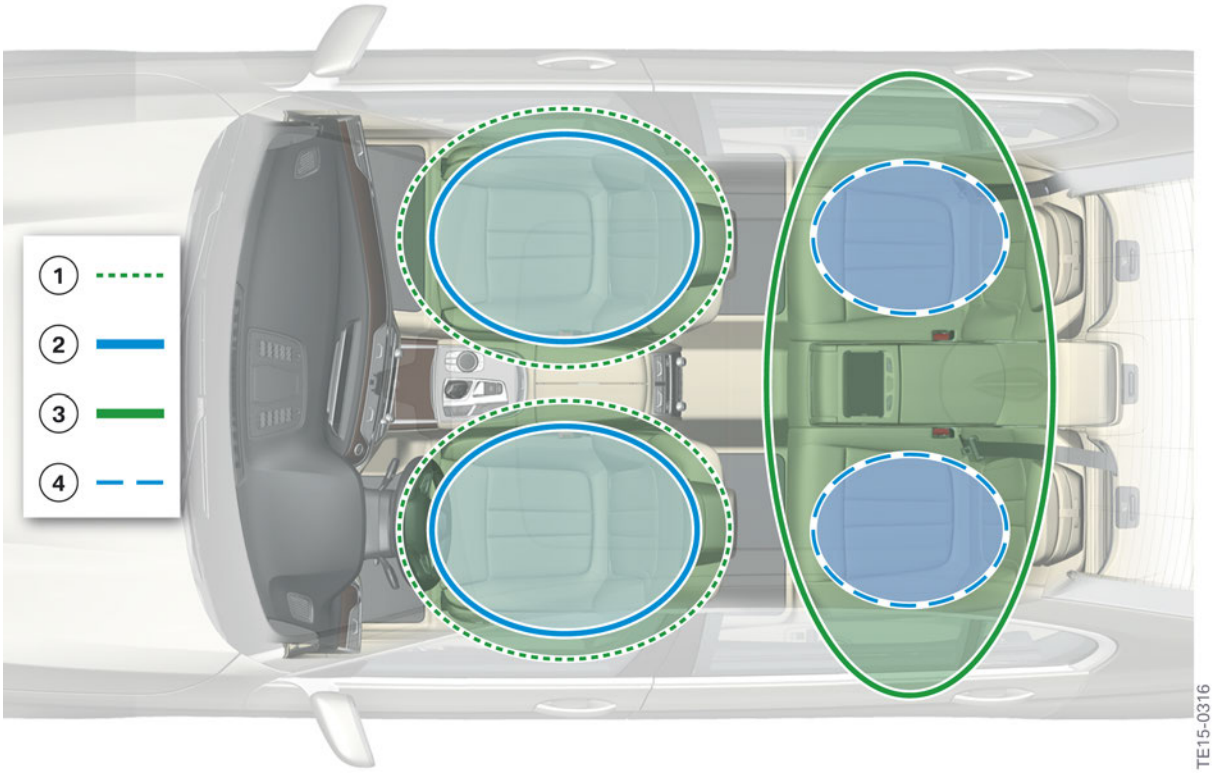

G12 4/3-zone IHKA – overview

Index	Explanation
1	Air flow control for driver/front passenger
2	Temperature adjustment for driver/front passenger
3	Air flow control for rear passenger compartment
4	Temperature adjustment for rear passenger compartment, left/right

1.3.2. Operating elements

The first digit represents the various temperature zones, in this case 4 different adjustment options for the entire vehicle interior. The digit 3 represents the various adjustment options for the amount of air, in this case 3 for the entire vehicle interior.

G12 Climate Control

1. Introduction

	4-zone automatic heating/air conditioning
Temperature	front: left/right rear: left/right
Amount of air	front: left/right rear: jointly for left/right in center
Control panels for driver/front passenger	 G12 touch control panel
Control panels in rear passenger compartment	 G12 rear control panel

G12 Climate Control

2. Cooling Circuit

2.1. Overview

The engines coolant circuit is used to heat the vehicle interior. The lines are routed differently depending on the engine version. On all models the coolant lines together with the refrigerant lines are always routed on the left-hand side of the vehicle through the bulkhead into the vehicle interior.

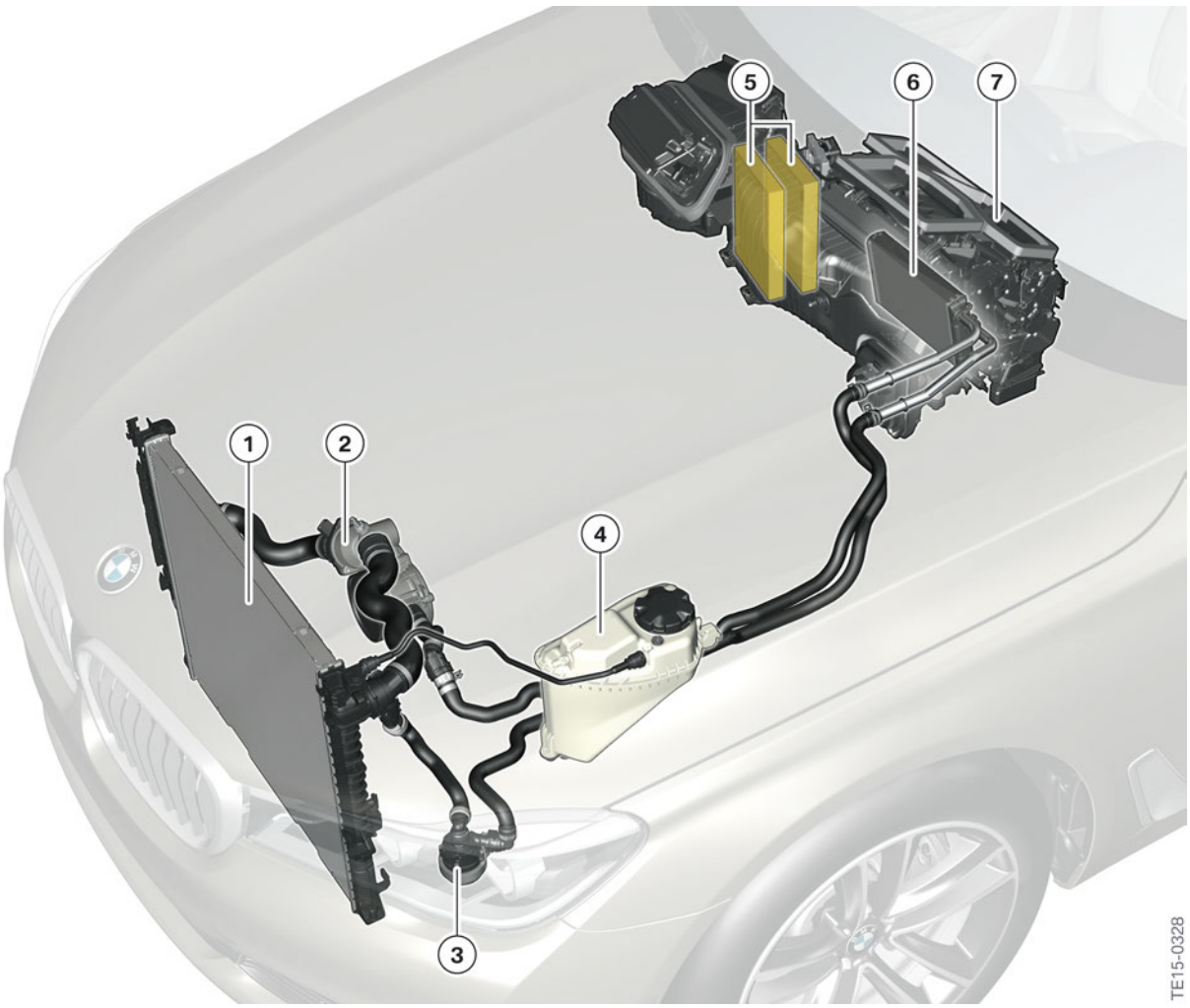

G12 coolant circuit

Index	Explanation
1	Radiator
2	Engine coolant pump
3	Electric coolant pump
4	Expansion tank
5	Micro filter
6	Heat exchanger
7	Heating and air-conditioning unit

G12 Climate Control

3. Refrigerant Circuit

3.1. Overview

The location of the refrigerant and coolant lines enters the passenger compartment on the left-hand side of the engine compartment.

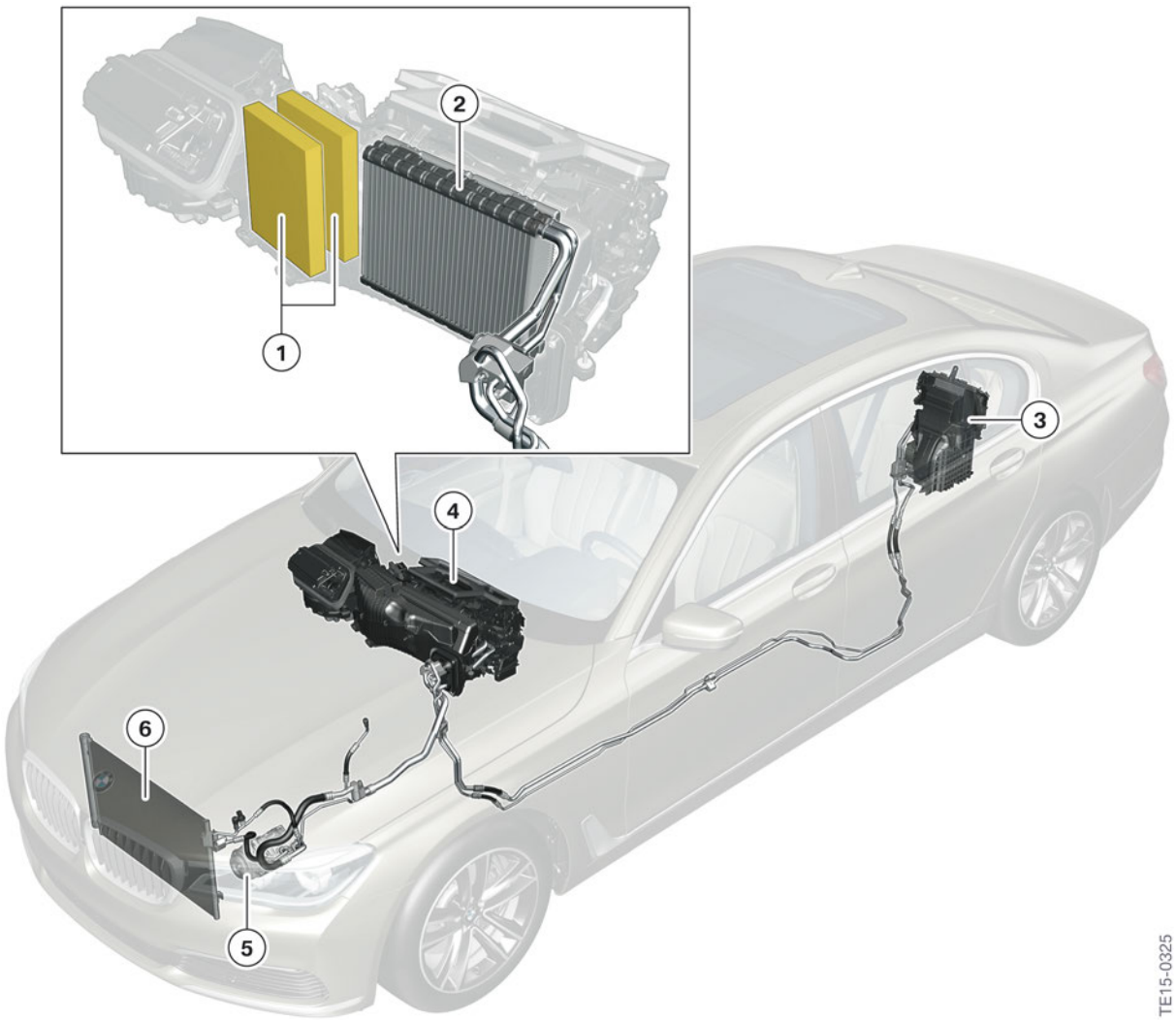

G12 refrigerant circuit

Index	Explanation
1	Micro filter
2	Evaporator
3	Rear air-conditioner (Not for US)
4	Heating and air-conditioning unit
5	A/C compressor
6	Air conditioning condenser

G12 Climate Control

3. Refrigerant Circuit

3.2. A/C compressor

The air conditioning compressor has been technically revised and its performance has been optimized.

3.3. Evaporator with Accumulator

The automatic engine start-stop function (MSA) can be used to switch off the engine. In this case, no refrigerant is delivered to the evaporator. As a result, only limited cooling capacity is available to cool the vehicle interior. If the vehicle is at a standstill for an extended period of time, the engine needs to be restarted in order to cool the interior. This counteracts the Efficient Dynamics measures and increases fuel consumption.

An accumulator evaporator is used. It is installed upstream of the air-conditioning evaporator and has the same concept as on the F10. The accumulator evaporator is filled with a latent substance that can absorb and store cooling energy very effectively. The cold air flowing past in normal operation charges the accumulator evaporator and can almost double its capacity.

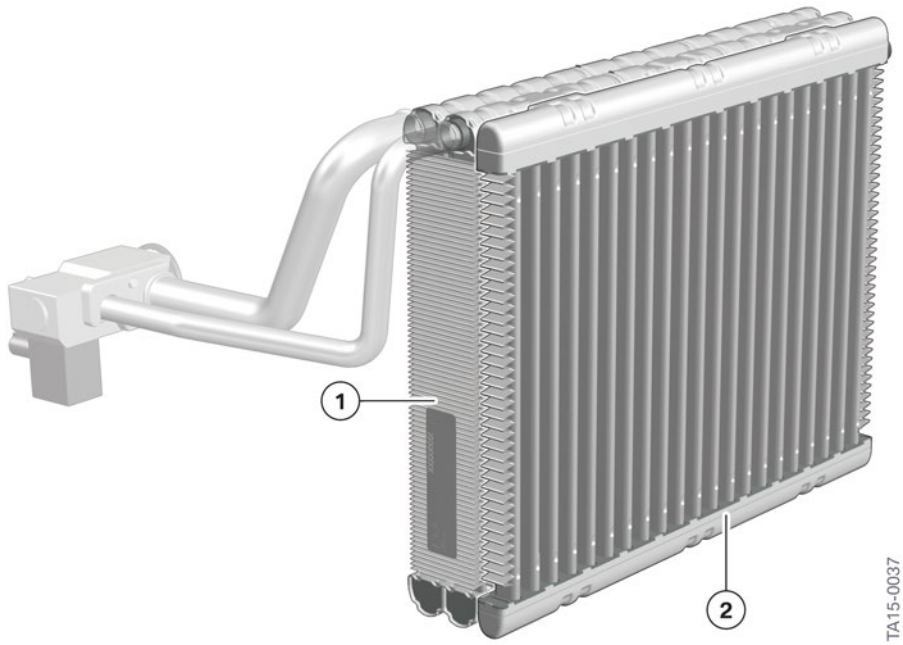

G12 accumulator evaporator

Index	Explanation
1	Refrigerant evaporator
2	Accumulator evaporator

G12 Climate Control

3. Refrigerant Circuit

3.4. Refrigerant lines (inner heat exchanger – IWT)

A new component is being used in the G12 refrigerant circuit: the inner heat exchanger (IWT). This special pipe-in-pipe system uses the refrigerant exiting the evaporator (with a temperature of about 5° C/41° F) to cool down the previously condensed refrigerant from the air conditioning condenser from about 55° C/131° F to about 45°C/113° F. This increases the evaporator performance and reduces the circulating flow of refrigerant with the same cooling power. As a result, the power consumption of the air conditioning compressor is reduced, which lowers fuel consumption.

The heat input into the refrigerant flowing to the compressor causes the refrigerant to completely evaporate. This prevents liquid refrigerant that is carried along from entering the air conditioning compressor.

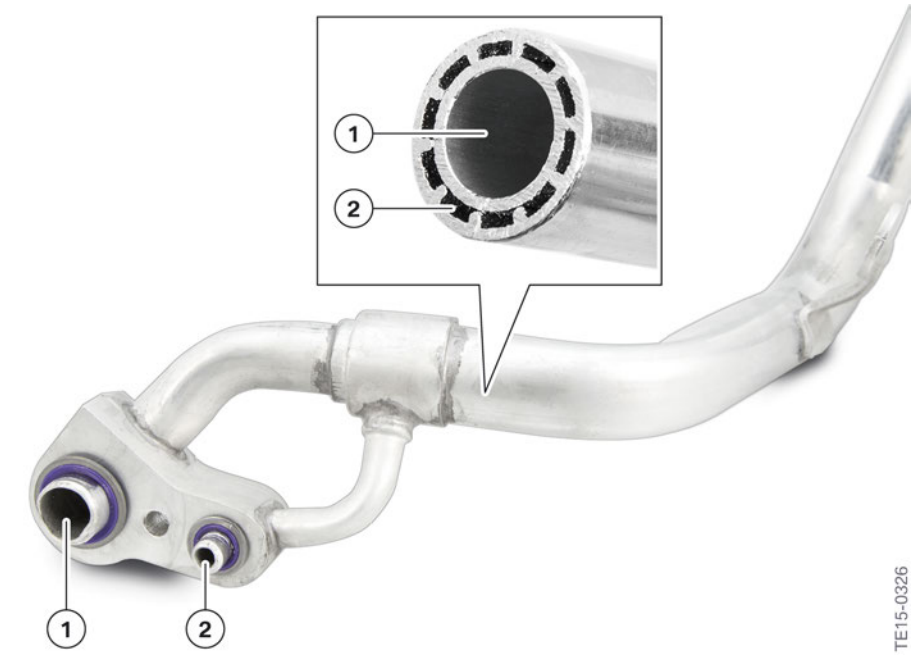

G12 new refrigerant line

Index	Explanation
1	Intake pipe (return to air conditioning compressor)
2	Pressure line (feed to evaporator)

G12 Climate Control
3. Refrigerant Circuit

3.5. Coolant-cooled air conditioning condenser

For the G12 740i with the engine version B58, a coolant-cooled air conditioning condenser is being used for the first time. The previous air-cooled air conditioning condenser in the radiator assembly continues to be used in vehicles with the engine version N63. The remainder of the refrigerant circuit (air conditioning compressor, evaporator, and inner heat exchanger (IWT) refrigerant lines) does not differ functionally between the systems. To the customer, there is no difference between the systems when using the interior climate control.

The low-temperature circuit for the turbocharger intercooler is also used for the air conditioning condenser circuit (via a coolant-refrigerant heat exchanger). An electric coolant pump adjusts the requested cooling power from the air conditioning system and combustion engine.

Additional information about the function of air conditioning condensers can be found in the **ST054 Climate Control** technical training manual.

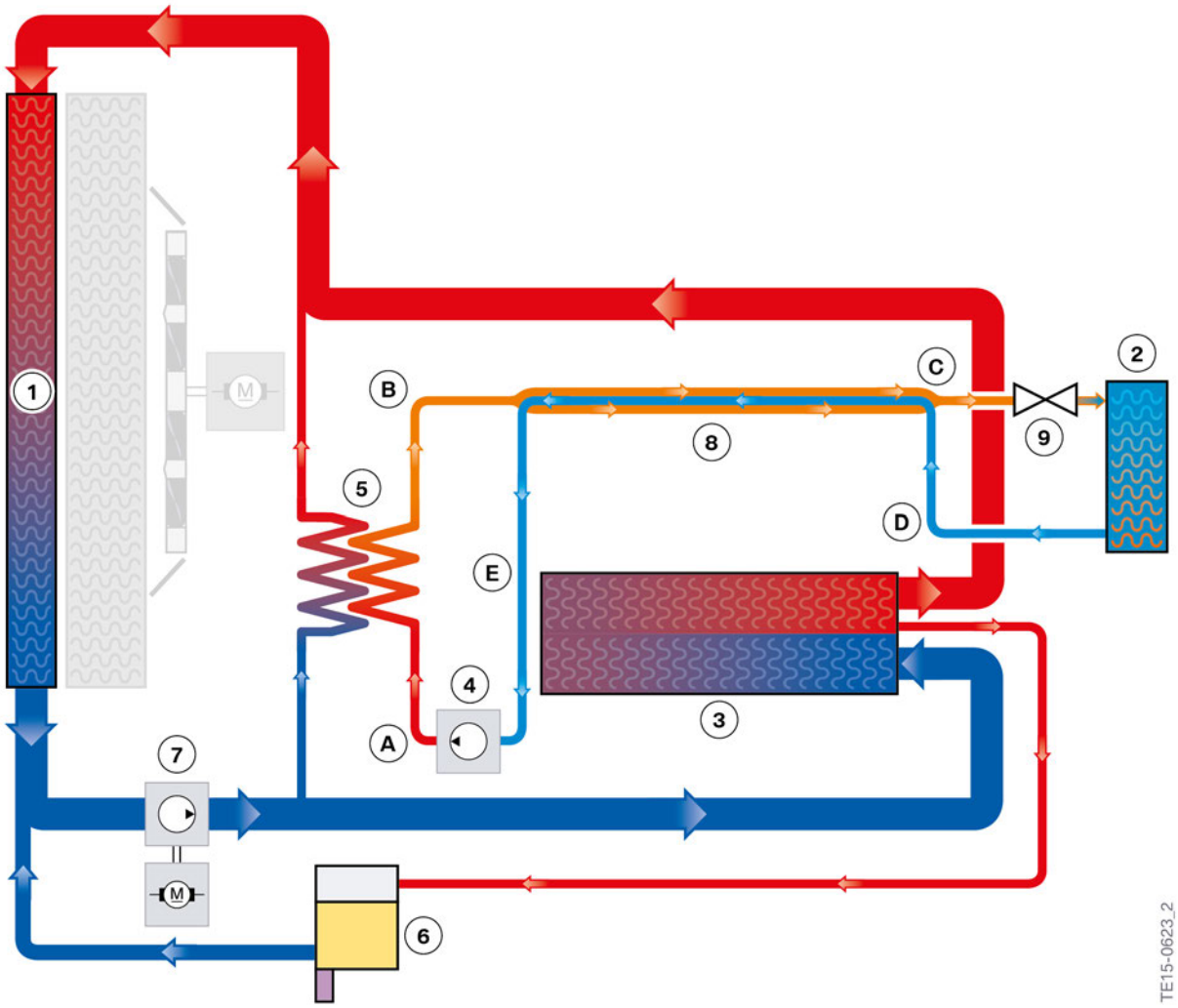

G12 low-temperature coolant circuit

G12 Climate Control

3. Refrigerant Circuit

Index	Explanation
1	Low temperature of radiator
2	Air conditioning evaporator
3	Indirect charge air cooler
4	A/C compressor
5	Coolant/refrigerant heat exchanger
6	Expansion tank
7	Electric coolant pump
8	Inner heat exchanger (IWT)
9	Expansion valve **(only metering side is shown)**
A	Temperature of refrigerant upon entering heat exchanger/air conditioning condenser = + 80° C/176° F
B	Temperature of refrigerant upon exiting heat exchanger/air conditioning condenser = + 55° C/131° F
C	Temperature of refrigerant upon exiting inner heat exchanger (IWT) + 45° C/113° F
D	Temperature of refrigerant upon exiting evaporator + 5° C/41° F
E	Temperature of refrigerant upon exiting inner heat exchanger (IWT) + 15° C/59° F

G12 Climate Control

3. Refrigerant Circuit

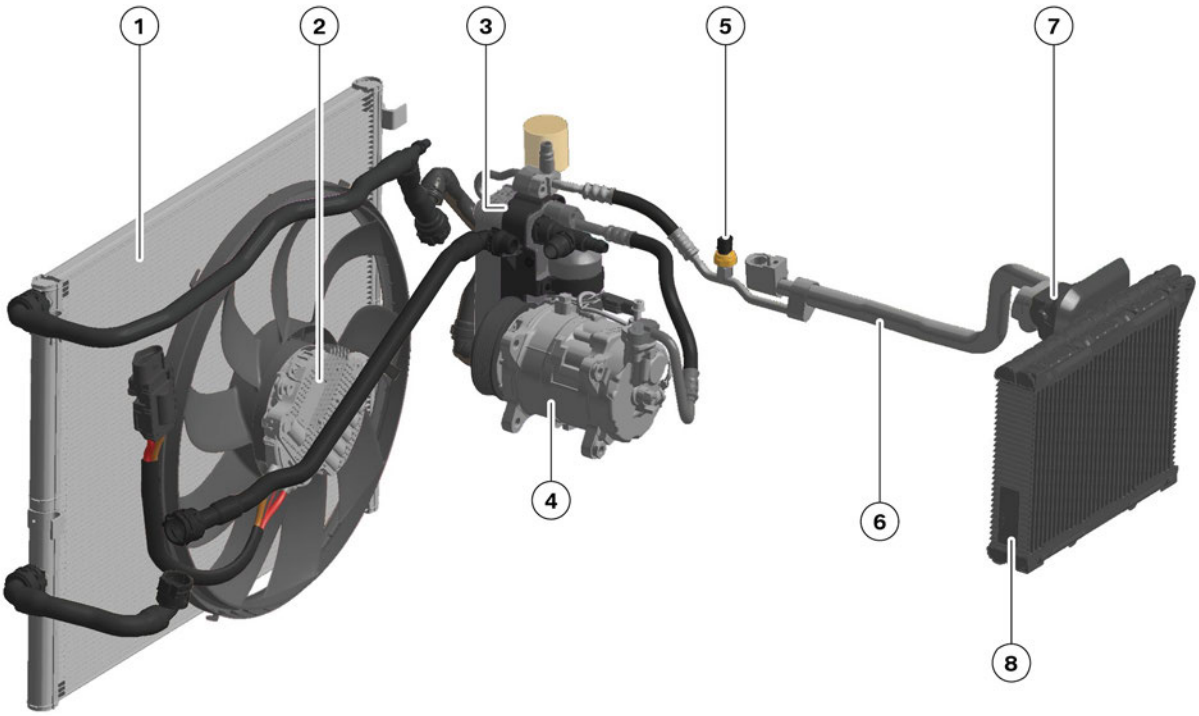

G12 coolant-cooled refrigerant system for vehicles with the B58 engine

Index	Explanation
1	Radiator
2	Cooling fan
3	Coolant-cooled air conditioning condenser
4	Air conditioning compressor
5	Refrigerant pressure sensor
6	Inner heat exchanger (IWT)
7	Expansion valve
8	Evaporator

G12 Climate Control

3. Refrigerant Circuit

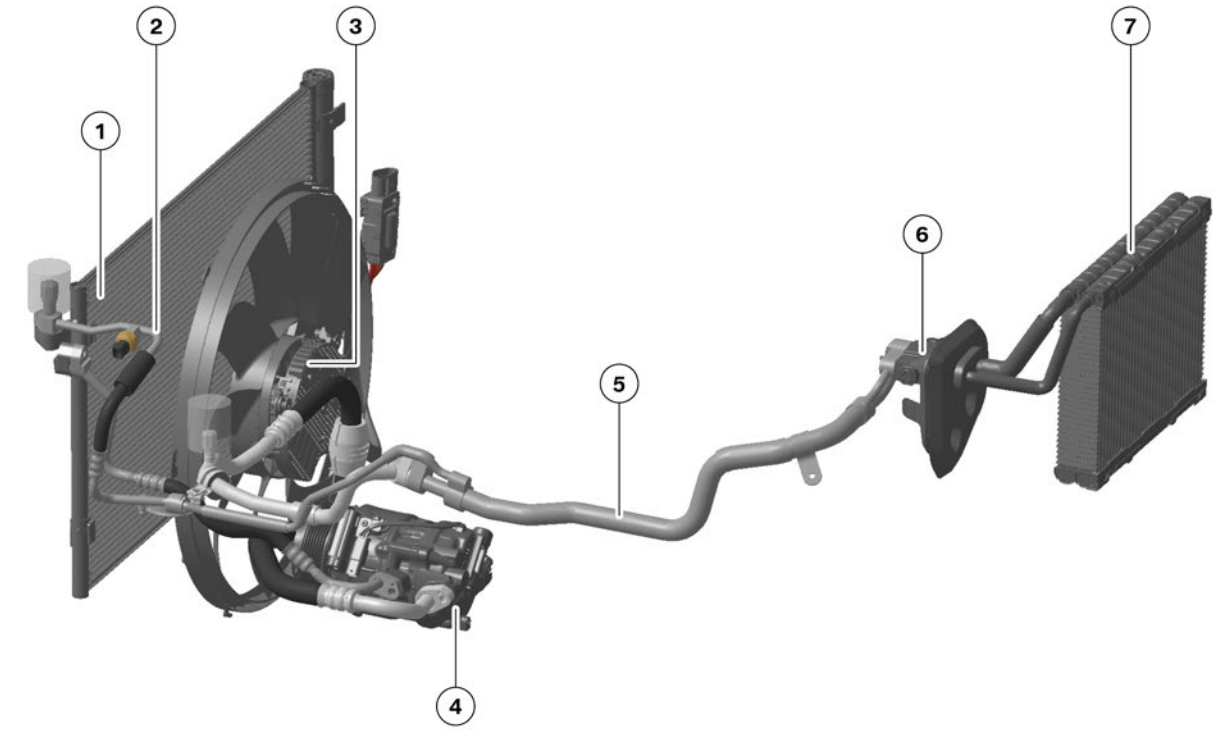

G12 air-cooled refrigerant system for vehicles with the N63 engine

Index	Explanation
1	Air-cooled air conditioning condenser
2	Refrigerant pressure sensor
3	Cooling fan
4	Air conditioning compressor
5	Inner heat exchanger (IWT)
6	Expansion valve
7	Evaporator

G12 Climate Control

4. Functions

4.1. 4-zone automatic heating/air conditioning

For the 4-zone IHKA, an additional control panel is installed in the rear passenger compartment. This gives the rear seat passengers the option of individual temperature control as well as joint control of the amount of air. The current settings of the driver can be transferred to the rear passenger compartment by pressing the "SYNC" button installed in the front IHKA control panel.

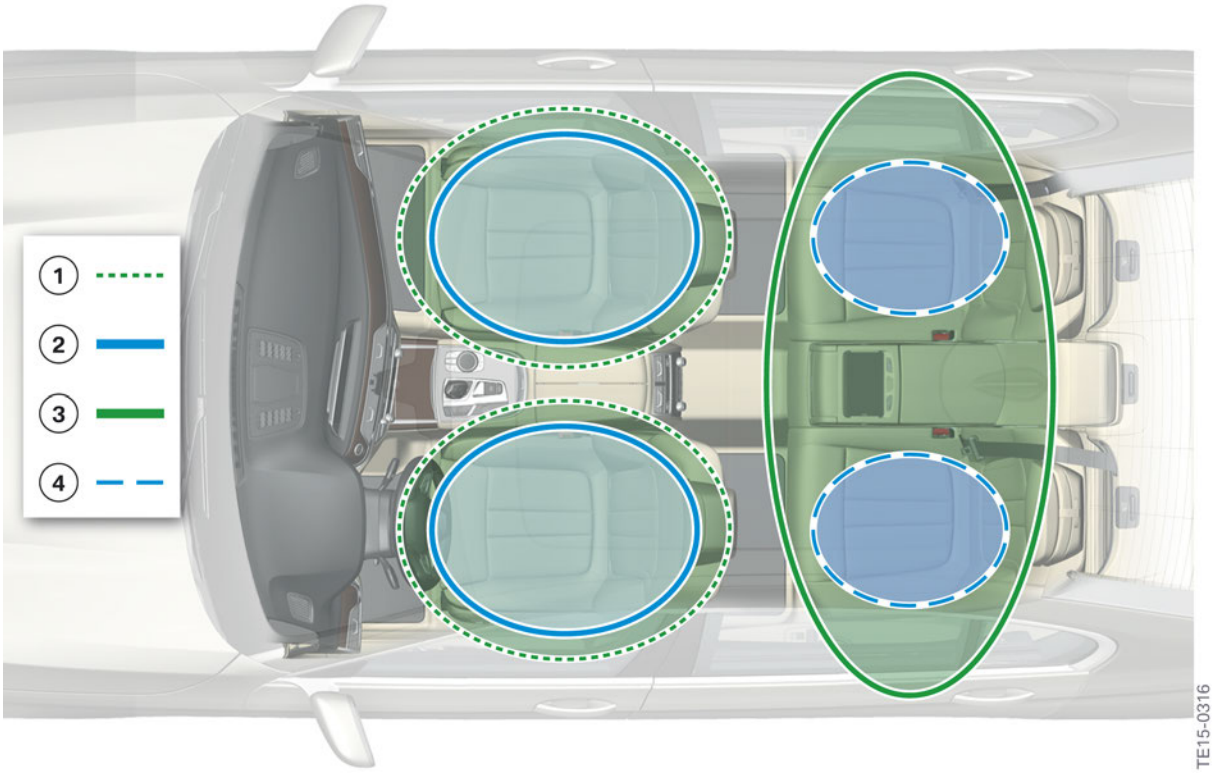

G12 4/3-zone – overview

Index	Explanation
1	Air flow control for driver/front passenger
2	Temperature adjustment for driver/front passenger
3	Air flow control for rear passenger compartment
4	Temperature adjustment for rear passenger compartment, left/right

G12 Climate Control

4. Functions

4.1.1. Wiring diagram

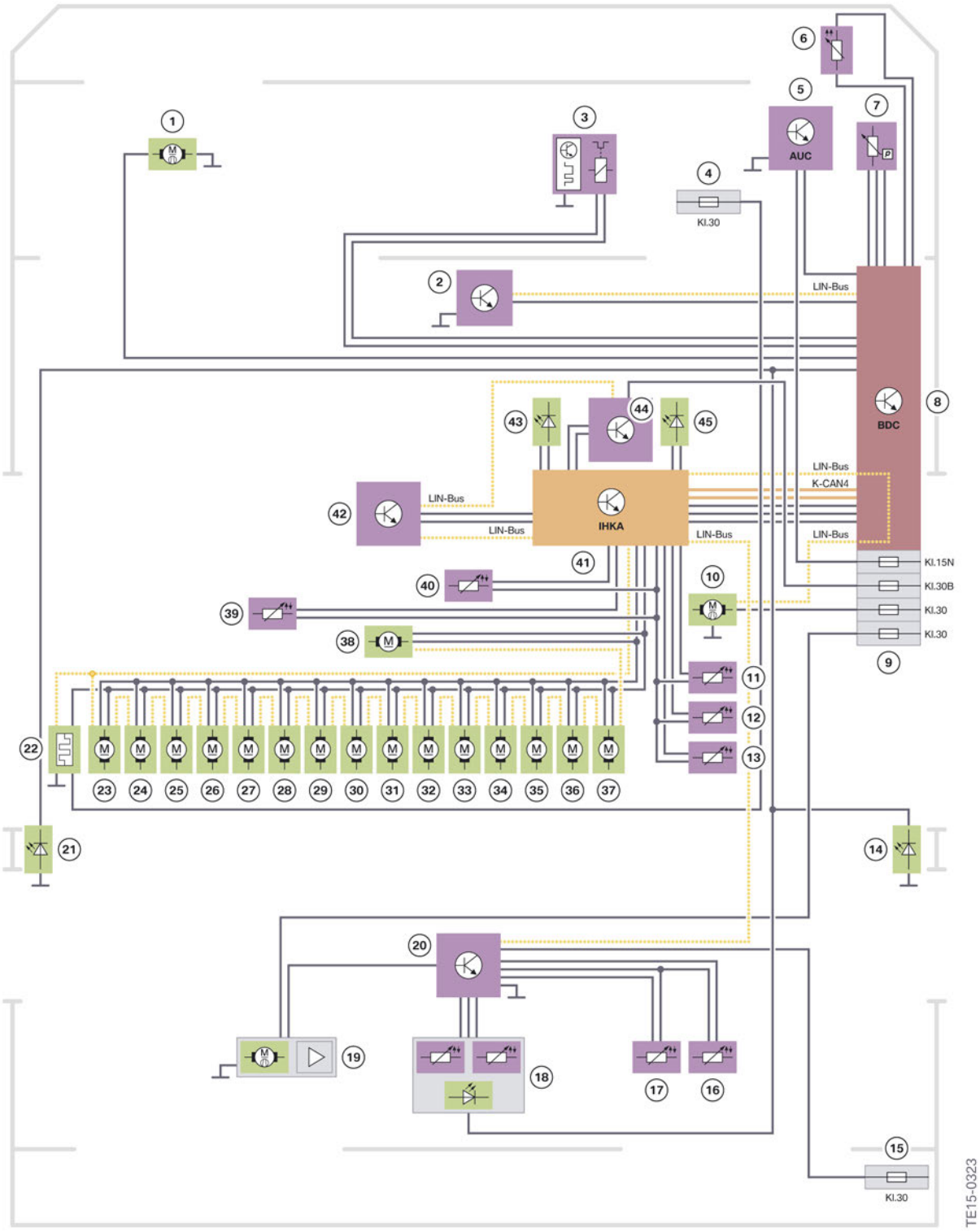

4/3-zone wiring diagram

G12 Climate Control
4. Functions

Index	Explanation
1	Auxiliary Heating
2	Rain-light-solar-condensation sensor
3	Air conditioning compressor
4	Fuse in power distribution box, engine compartment
5	Automatic air recirculation control sensor
6	Outside temperature sensor
7	Refrigerant pressure sensor
8	Body Domain Controller (BDC)
9	Fuses in power distribution box, front right
10	Blower motor
11	Temperature sensor for evaporator
12	Temperature sensor for footwell, left
13	Temperature sensor for footwell, right
14	Lighting for fresh air grille for B-pillar, right
15	Fuse in power distribution box, rear right
16	Temperature sensor for footwell, rear right
17	Temperature sensor for footwell, rear left
18	Temperature sensor for rear passenger compartment, center fresh-air vent
19	Blower motor
20	IHKA control panel, rear passenger compartment
21	Lighting for fresh air grille for B-pillar, left
22	Electric auxiliary heater
23	Stepper motor for fresh air
24	Stepper motor for air recirculation function
25	Stepper motor, defrost
26	Stepper motor for ventilation, left
27	Stepper motor for ventilation, right
28	Stepper motor for stratification, left
39	Stepper motor for stratification, right
30	Stepper motor, footwell, left
31	Stepper motor, footwell, right
32	Stepper motor for air distribution in rear passenger compartment, left
33	Stepper motor for air distribution in rear passenger compartment, right
34	Stepper motor for blending flap in rear passenger compartment, left
35	Stepper motor for blending flap in rear passenger compartment, right

Index	Explanation
36	Stepper motor for blending flap in rear passenger compartment, left
37	Stepper motor for blending flap in rear passenger compartment, right
38	Stepper motor for indirect ventilation
39	Temperature sensor for ventilation, left
40	Temperature sensor for ventilation, right
41	IHKA control unit
42	IHKA control panel for driver/front passenger
43	Lighting for knurled wheel, ventilation outlet
44	Stratification controller with touch operation
45	Lighting for knurled wheel, ventilation outlet

4.1.2. 4-zone IHKA control panel

The 4-zone IHKA operating concept features a full-color display IHKA. The bottom of the display between the two temperature selector wheels now features a touch panel for the first time. The amount of air for the driver/front passenger as well as the seat heating/active seat ventilation and the air freshener can be adjusted using touch control. To do so, users must touch the symbol on the display. As soon as the touch panel detects that a user has touched the screen, an information page appears on the Central Information Display (CID) with information about the desired setting for the operator. This page disappears automatically after a few seconds.

On the 4-zone IHKA, the current settings of the driver for temperature, amount of air and air distribution can be transferred to the passenger's side and the rear passenger compartment by pressing the SYNC button.

G12 4-zone IHKA control panel with touch operation

Index	Explanation
1	Touch-sensitive surface (touch panel)

G12 Climate Control

4. Functions

4.1.3. Layering

In conjunction with the 4-zone IHKA, a touch-sensitive touch panel for adjusting the stratification has been installed for the first time underneath the center vent for the temperature stratification (separate for the driver/front passenger). To adjust, users can slide their finger or touch the panel at the desired position. The index then jumps directly to the position that the user has touched. The third option is to touch the respective end position (blue or red). The index then jumps one level in the respective direction. As soon as the system detects that a user has touched the panel, this is shown accordingly on the Central Information Display (CID).

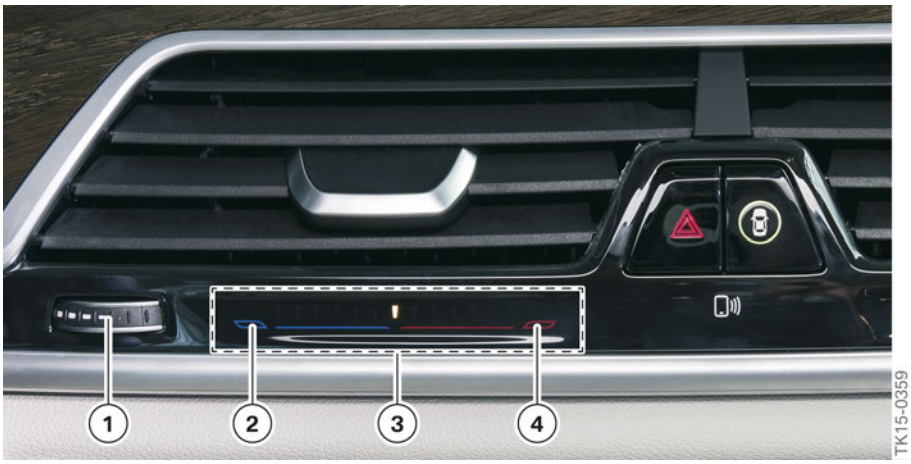

G12 touch stratification

Index	Explanation
1	Rotary controller for opening/closing the center vent – driver
2	Cold stratification range
3	Touch-sensitive surface (touch panel)
4	Warm stratification range

G12 Climate Control

4. Functions

4.1.4. 4-zone IHKA control panel for rear passenger compartment

In addition, the 4-zone IHKA has a control panel in the rear passenger compartment. The rear passengers can separately adjust the temperature on the left and right. The air distribution and the amount of air flow is combined and not adjusted separately for the left and right rear passenger compartment.

On the 4-zone IHKA, the current settings of the driver for temperature, amount of air and air distribution can be transferred to the passenger's side and the rear passenger compartment by pressing the SYNC button.

G12 4-zone IHKA control panel for rear passenger compartment

4.1.5. Touch Command

The new Touch Command operating element (optional equipment 6U9) is being used in the G12 for the first time. The removable tablet PC not only replaces the rear passenger compartment iDrive controller, it also provides additional functions. All settings and functions of the IHKA control panel for the rear passenger compartment can also be configured/activated with the Touch Command. Further information on Touch Command can be found in the Reference Manual " G12 Display and Operating Elements".

G12 Touch Command

4.1.6. Air treatment

Air freshener

The Ambient Air Package optional equipment (OE 4NM) includes an air freshener and an ionizer. The air freshener enhances the vehicle interior with one of 4 selectable fragrances, each of which is available in 2 intensity levels. Two of these 4 selectable cartridges can be placed together in a small extendable storage compartment in the glove box on the passenger's side. Customers can then decide between one of the two fragrances provided. It is only possible to select the available fragrance cartridges on the Central Information Display (CID) using the iDrive controller. An intensity level from 1 to 3 can be selected by the menu on the Central Information Display (CID) or using the button on the air conditioning control panel. If the user activates the air freshener the information window automatically appears on the Central Information Display (CID). It is not possible to mix the two fragrances.

G12 Climate Control

4. Functions

G12 air freshener graphic on CID

The selected fragrance enhances the vehicle interior in pulses at defined intervals according to the configured intensity level. This is because a person's sense of smell adjusts to a given scent relatively quickly and then no longer perceives it. When stepping into the vehicle, a "welcome scenario" is activated depending on the settings of the personalized ignition key (Key Memory). Depending on the setting for the intensity level, a separate fan installed in the air freshener unit then directs air through the cartridge every 90 s – 5 min, which is supplied to the vehicle interior. The enhanced air is only directed into the vehicle interior at one central point at the top of the instrument panel. To facilitate this, it must be ensured that the vehicle interior is indirectly ventilated. If the air freshener is deactivated on the Central Information Display (CID), the integrated fan in the air freshener unit continues running for approx. 30 s to purge the system.

G12 Climate Control
4. Functions

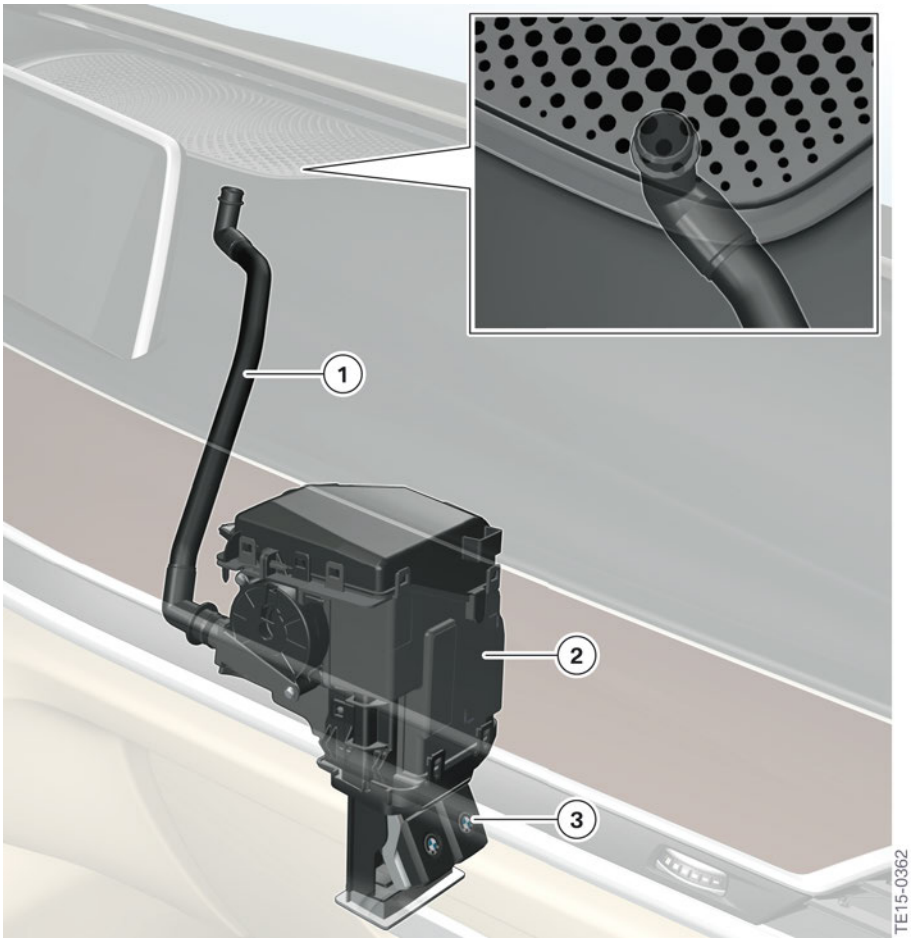

G12 air freshener unit on left-hand drive vehicles

Index	Explanation
1	Air line from the air freshener unit to the air vent in the dash panel
2	Air freshener unit
3	Fragrance cartridge

The air freshener unit is installed in the glove box on the passenger's side.

G12 Climate Control

4. Functions

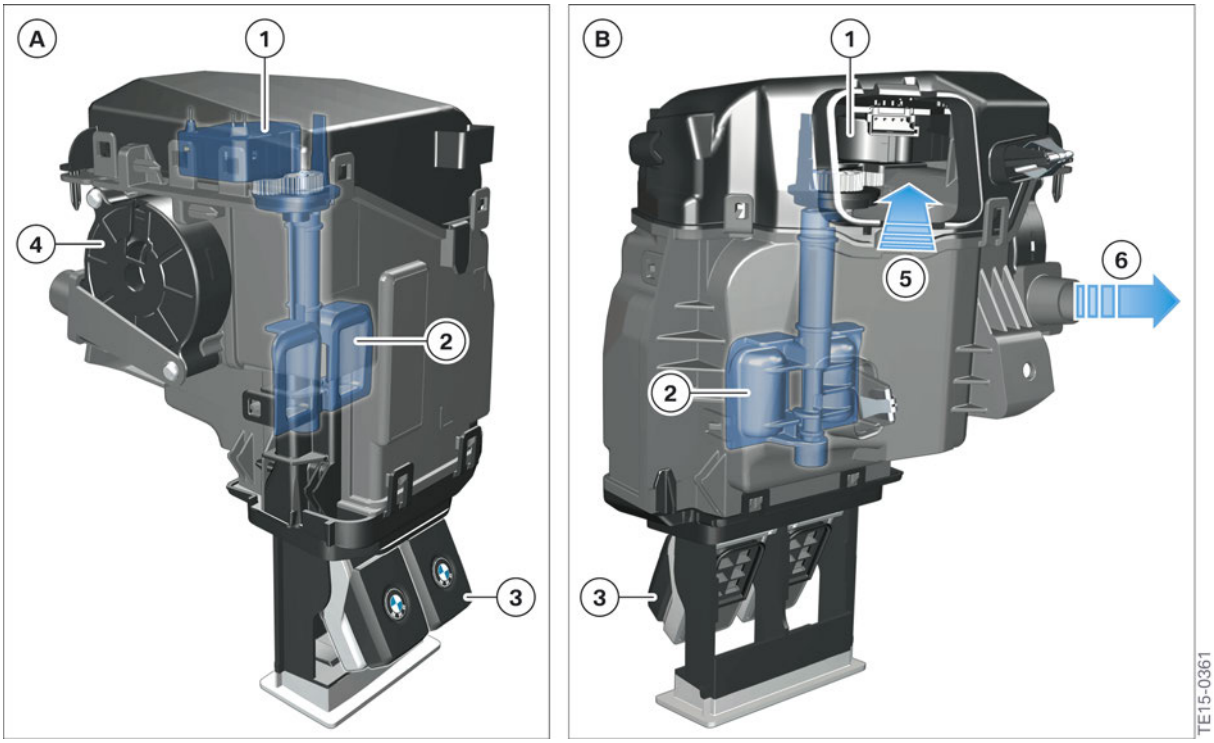

G12 air freshener unit with 2 cartridges on left-hand drive vehicle

Index	Explanation
A	Air freshener unit – view from vehicle interior
B	Air freshener unit – view from engine compartment
1	Servomotor for controlling the air flaps for the various fragrances
2	Air flaps
3	Fragrance cartridges
4	Blower of air freshener unit
5	Air intake opening
6	Air outlet opening for the scented air

G12 Climate Control

4. Functions

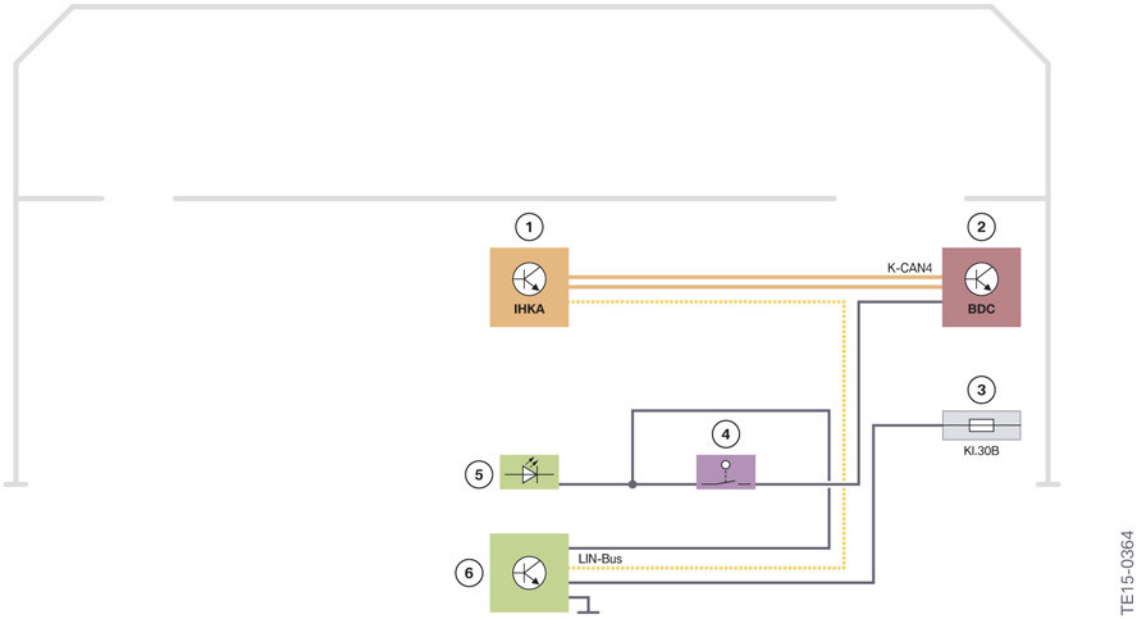

G12 air freshener wiring diagram

Index	Explanation
1	IHKA control unit
2	Body Domain Controller
3	Fuse in power distribution box, front right
4	Glove box switch
5	Glove box light
6	Air freshener control unit

G12 Climate Control
4. Functions

Fragrance cartridge

G12 fragrance cartridge

The fragrance cartridges manufactured by Mahle are available from BMW Parts and have a shelf life of up to 2.5 years. With average consumption the cartridges will last approx. 3–6 months before they need to be replaced. Empty fragrance cartridges can be disposed of with household waste. Every cartridge is equipped with a SIM card that provides information on the fragrance, filling level and age of the cartridge by the LIN-bus. The lid on the cartridge, which seals the cartridge using a rubber seal on the housing, prevents the fragrance from escaping while the cartridge is in storage. The cartridge lid is pushed on and needs to be removed before inserting the cartridge into the air freshener unit. The lid can be slid back on to the rear side of the cartridge, but this is not required to insert the cartridge into the air freshener unit, its only for storing the lid for future use.

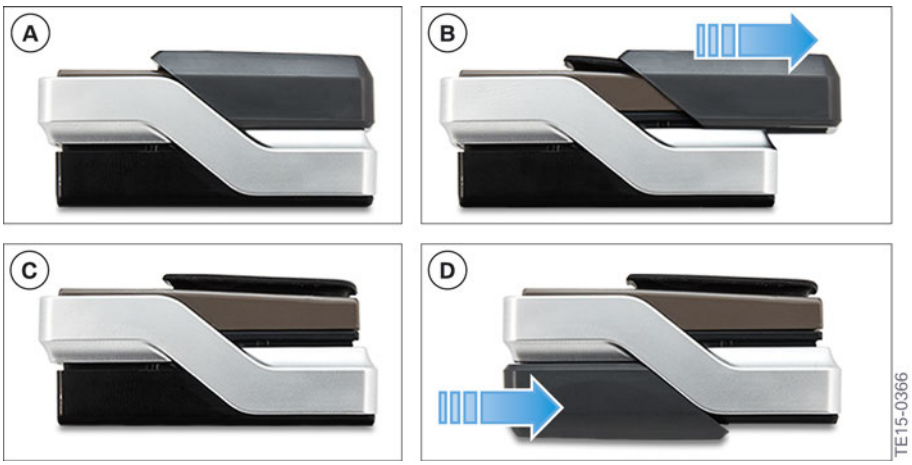

Handling the cartridge lid

Index	Explanation
A	Closed cartridge
B	Opening the cartridge closure
C	Cartridge opened
D	Cartridge lid slid on to the cartridge base

Fragrance versions

The following list provides an overview of the available fragrances and whether they are mild or strong. The fragrances labelled with No. 1 are milder than those labelled with No. 2. Each vehicle with the relevant Air Package equipment (optional equipment 4NM) is supplied with a starter kit of 4 fragrances.

The following fragrances are available in No.1 (mild) or No. 2 (rich):

- Blue Suite 1 light
- Green Suite 1 light
- Golden Suite 2 rich
- Authentic Suite 2 rich

Ionizer

The ionizer in the G12 has little in common with the system from the F01/F02. The ionizer installed in the F01/F02 only functions if there are no occupants in the vehicle and the vehicle is locked. The new system in the G12 always functions when the vehicle is in use and the system is not switched off on the Central Information Display (CID).

The ionizer is responsible for bringing negatively charged air ions into the vehicle interior. The aim is to eliminate pathogenic microorganisms in the air, such as germs and allergens. Dirt particles in the air flowing past become heavier as a result of the adhesion of the negative ions and the bonding into a molecule, and sink to the bottom.

G12 ionizer

The emitters that are installed in the air ducts of the central vents are operated using a high-voltage discharge of approx. 2000–3000 V. However, the current applied for this lies within the microampere range of 0.53 µA and is therefore non-hazardous. Only negatively charged air ions are generated as a result of the air flowing past the emitters. These can bind more oxygen, which contributes to an improved sense of wellbeing and higher concentration.

G12 Climate Control

4. Functions

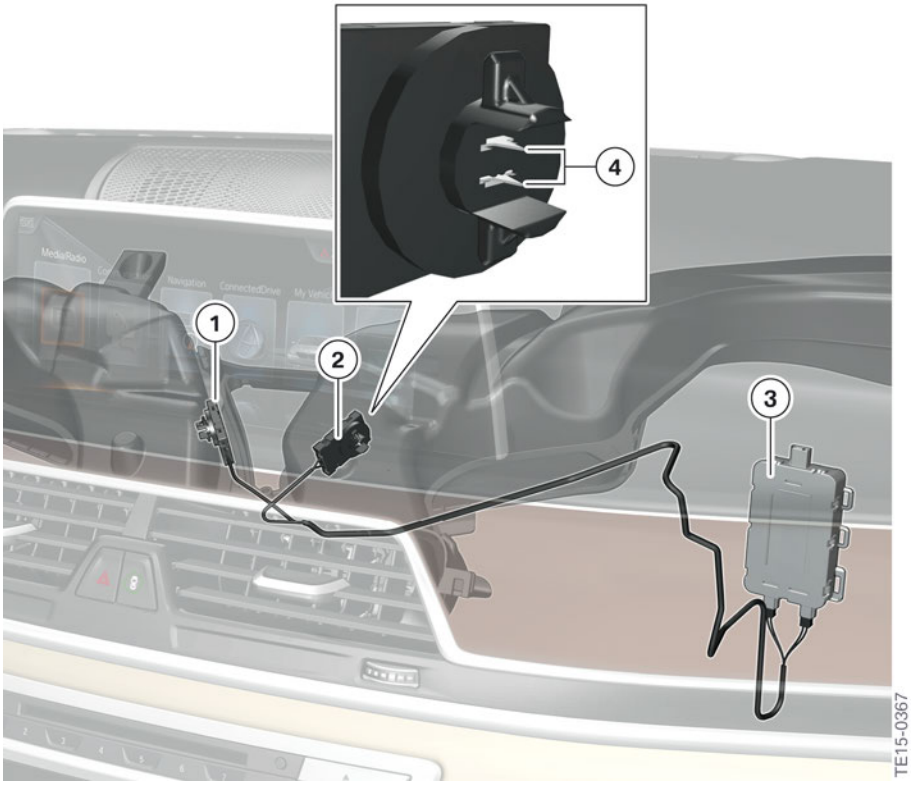

G12 emitters

Index	Explanation
1	Emitter on driver's side
2	Emitter on passenger's side
3	Ionizer control unit
4	Emitters

The ionizer control unit is installed on the heating and air-conditioning unit near the IHKA control unit. Three electrical connections are provided on the control unit. One three-pin connection is responsible for LIN-bus communication and the supply voltage. The other two connections are two-pin and supply the necessary high voltage to the emitters in the air ducts. The main control unit that controls the ionizer is the IHKA. The system has diagnostic capability and runs a self-test when starting by applying high voltage to the emitters. If the system fails to apply high voltage to the emitters three times, the system switches off and a fault message appears on the Central Information Display (CID).

G12 Climate Control

4. Functions

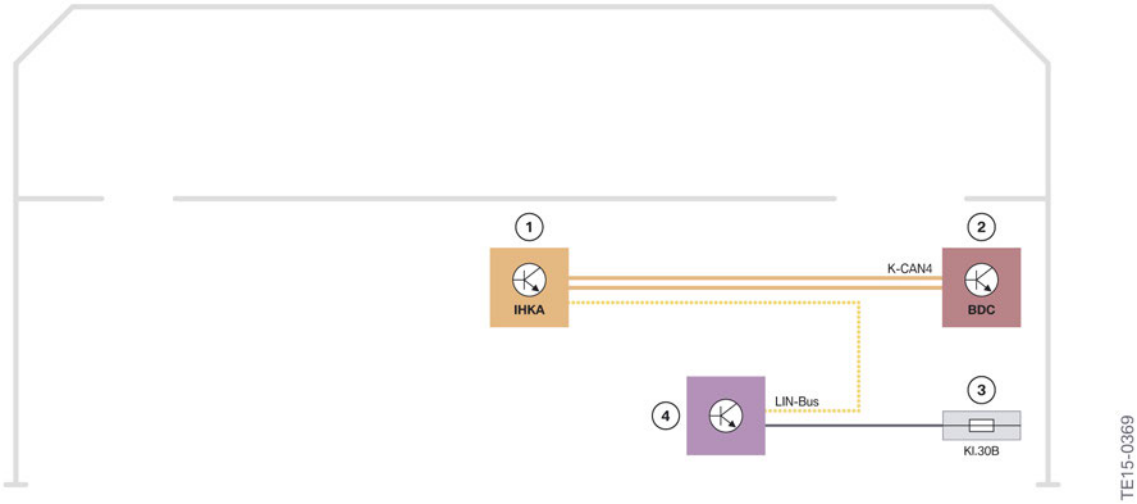

G12 ionizer wiring diagram

Index	Explanation
1	IHKA control unit
2	Body Domain Controller (BDC)
3	Fuse in power distribution box, front right
4	Ionizer control unit

Bayerische Motorenwerke Aktiengesellschaft
Händlerqualifizierung und Training
Röntgenstraße 7
85716 Unterschleißheim, Germany

Technical Training
Product information.

G12 Passive Safety Systems

Edited for the U.S. market by:
BMW Group University
Technical Training
ST1501 9/1/2016

BMW Service

General information

Symbols used

The following symbol is used in this document to facilitate better comprehension or to draw attention to very important information:

⚠

Contains important safety information and information that needs to be observed strictly in order to guarantee the smooth operation of the system.

Information status and national-market versions

BMW Group vehicles meet the requirements of the highest safety and quality standards. Changes in requirements for environmental protection, customer benefits and design render necessary continuous development of systems and components. Consequently, there may be discrepancies between the contents of this document and the vehicles available in the training course.

This document basically relates to the European version of left hand drive vehicles. Some operating elements or components are arranged differently in right-hand drive vehicles than shown in the graphics in this document. Further differences may arise as the result of the equipment specification in specific markets or countries.

Additional sources of information

Further information on the individual topics can be found in the following:

- Owner's Handbook
- Integrated Service Technical Application.

Contact: conceptinfo@bmw.de

©2015 BMW AG, Munich

Reprints of this publication or its parts require the written approval of BMW AG, Munich

The information contained in this document forms an integral part of the technical training of the BMW Group and is intended for the trainer and participants in the seminar. Refer to the latest relevant information systems of the BMW Group for any changes/additions to the technical data.

Information status: **July 2015**
Technical Training

G12 Passive Safety Systems

Contents

1. Introduction **1**
1.1. The hidden protector 1

2. System Overview **2**
2.1. System wiring diagrams 2
2.1.1. Bus overview 2
2.1.2. System wiring diagram 5
2.2. System overview 7

3. Functions **10**
3.1. Functions of Advanced Crash Safety Module 10
3.2. Crash-relevant functions 11
3.2.1. Evaluating the sensor signals 11
3.2.2. Impact detection 11
3.2.3. Trigger time and trigger sequence 12
3.2.4. Activation of the ignition circuit output stages 12
3.2.5. Sending the crash message 13
3.2.6. Crash documentation 13
3.2.7. Emergency call function 13
3.3. System monitoring functions 14
3.3.1. System self test 14
3.3.2. Display of system operability 14
3.3.3. Cyclic monitoring 14
3.3.4. Fault display and fault storage 15
3.3.5. Output of faults (diagnosis) 15
3.3.6. Acoustic and visual seat belt warning 15
3.3.7. Deactivating the airbag 16
3.4. Active protection 16
3.4.1. System wiring diagram for Active Protection 17
3.4.2. PreCrash 18
3.4.3. PostCrash 20

4. System Components **21**
4.1. Advanced Crash Safety Module 21
4.2. Sensors and switches 22
4.2.1. Lateral and longitudinal acceleration sensor 22
4.2.2. Door pressure sensor 23
4.2.3. Airbag front sensor 24
4.2.4. Sensors in the ACSM 25
4.2.5. CIS mat 25
4.2.6. Seat belt buckle switch 26

G12 Passive Safety Systems

Contents

4.2.7. Emergency call button ... 27
4.2.8. Seat-position sensors ... 27
4.3. Actuators ... 28
4.3.1. Overview ... 28
4.3.2. Driver's airbag ... 30
4.3.3. Front passenger airbag ... 31
4.3.4. Knee airbag ... 32
4.3.5. Head airbag ... 33
4.3.6. Side airbag ... 34
4.3.7. Automatic tensioner with adaptive force limiter ... 35
4.3.8. Active head restraints, front ... 36
4.3.9. Safety battery terminal ... 37
4.3.10. Airbag indicator light ... 38
4.3.11. Seat belt warning light ... 39
4.3.12. Indicator lamp for front passenger airbag deactivation ... 40

G12 Passive Safety Systems

1. Introduction

1.1. The hidden protector

The passive safety system of the G12 is based on the objectives and characteristics of current BMW models. The passive safety system fulfils all legislative requirements worldwide.

The restraint systems ensure that the risk of injury is reduced.

A 5th generation Advanced Crash Safety Module (ACSM) is used as the central airbag control unit for the passive safety system in the G12. In contrast to other series, with the passive safety system of the G12 the central sensor system is integrated in the ACSM control unit and not in the Integrated Chassis Management (ICM). This is possible with the G12 as the Advanced Crash Safety Module (ACSM) is located in the center of vehicle.

The ACSM 5 of the G12 is a bus user in the FlexRay. The sensor data of the central sensor system which was previously provided by the Integrated Chassis Management (ICM) can be transmitted directly by the Advanced Crash Safety Module (ACSM) via FlexRay to the Dynamic Stability Control (DSC).

G12 Passive Safety Systems

2. System Overview

The following bus overview outlines the vehicle electrical system structure of the G12 and the incorporation of the Advanced Crash Safety Module (ACSM) in the FlexRay.

2.1. System wiring diagrams

2.1.1. Bus overview

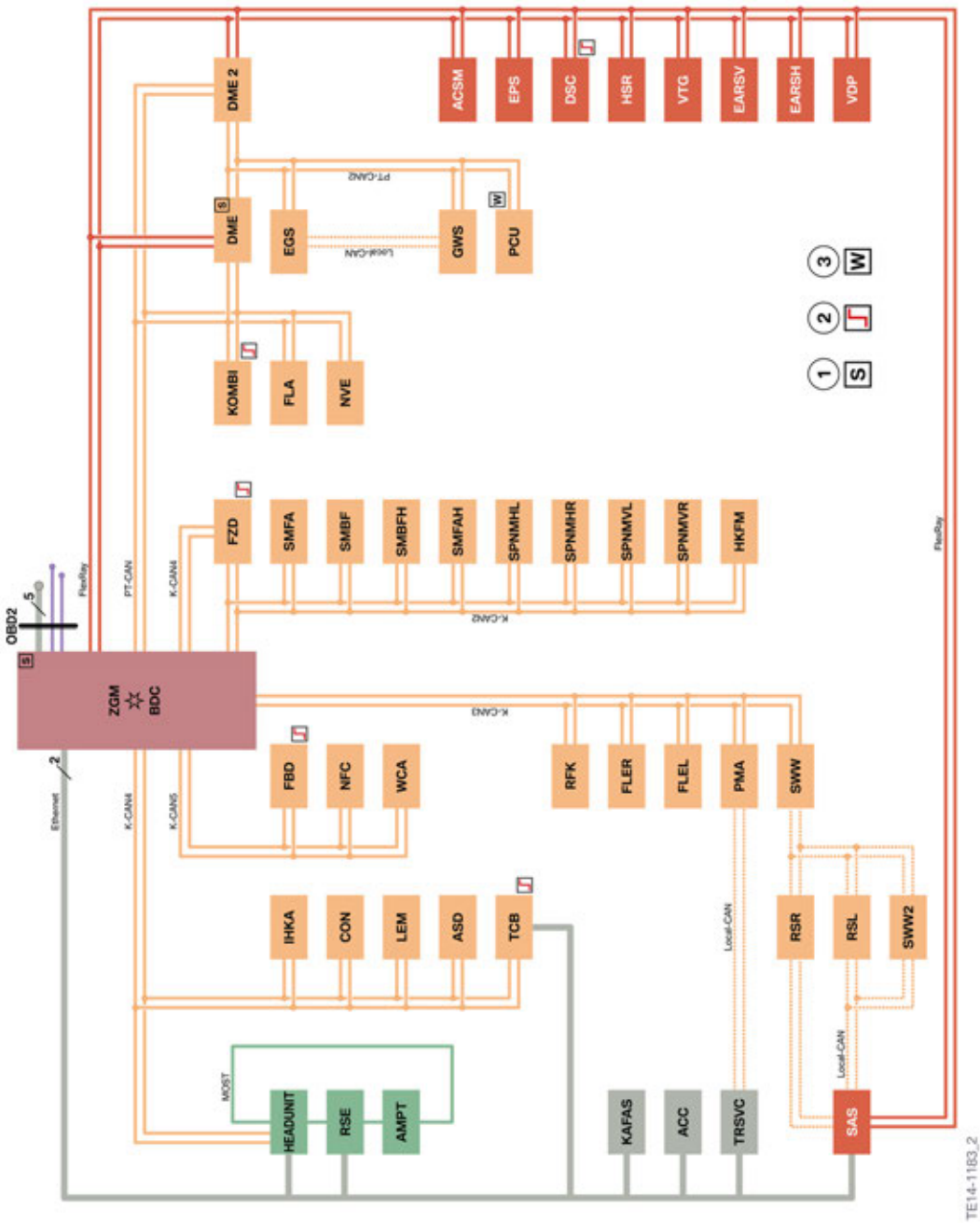

G12 bus overview

G12 Passive Safety Systems
2. System Overview

Index	Explanation
ACC	Active cruise control
ACSM	Advanced Crash Safety Module
AMPT	Top Hi-Fi amplifier
ASD	Active Sound Design
BDC	Body Domain Controller
CON	Controller
DME	Digital Motor Electronics
DME2	Digital Engine Electronics 2
DSC	Dynamic Stability Control
EARSH	Electric active roll stabilization rear
EARSV	Electric active roll stabilization front
EGS	Electronic transmission control
EPS	Electromechanical Power Steering
FLA	High-beam assistant
FLER	Frontal Light Electronics Right
FLEL	Frontal Light Electronics Left
FZD	Roof function center
GWS	Gear selector
HEADUNIT	Head unit
HKFM	Tailgate function module
HSR	Rear axle slip angle control
IHKA	Integrated automatic heating / air conditioning
KAFAS	Camera-based driver support systems
KOMBI	Instrument panel
LEM	Light effect manager
NFC	Near Field Communication
NVE	Night Vision Electronics
PCU	Power Control Unit
PMA	Parking manoeuvring assistant
RFK	Reversing camera
RSE	Rear Seat Entertainment
RSL	Radar sensor left (avoidance assistant)
RSR	Radar sensor right (avoidance assistant)
SAS	Optional equipment system
SMBF	Seat module, passenger

G12 Passive Safety Systems
2. System Overview

Index	Explanation
SMBFH	Seat module, passenger, rear
SMFA	Seat module, driver
SMFAH	Seat module, driver, rear
SPNMHL	Seat pneumatics module back left
SPNMHR	Seat pneumatics module back right
SPNMVL	Seat pneumatics module front left
SPNMVR	Seat pneumatics module front right
SWW	Lane change warning (master)
SWW2	Lane change warning (slave)
TCB	Telematic Communication Box
TRSVC	Top rear side view camera
VDP	Vertical dynamics platform
VTG	Transfer case
WCA	Wireless charging tray
ZGM	Central gateway module
1	Start-up node control units for starting and synchronizing the FlexRay bus system
2	Control units with wake-up authorisation
3	Control units also connected at terminal 15WUP

G12 Passive Safety Systems

2. System Overview

2.1.2. System wiring diagram

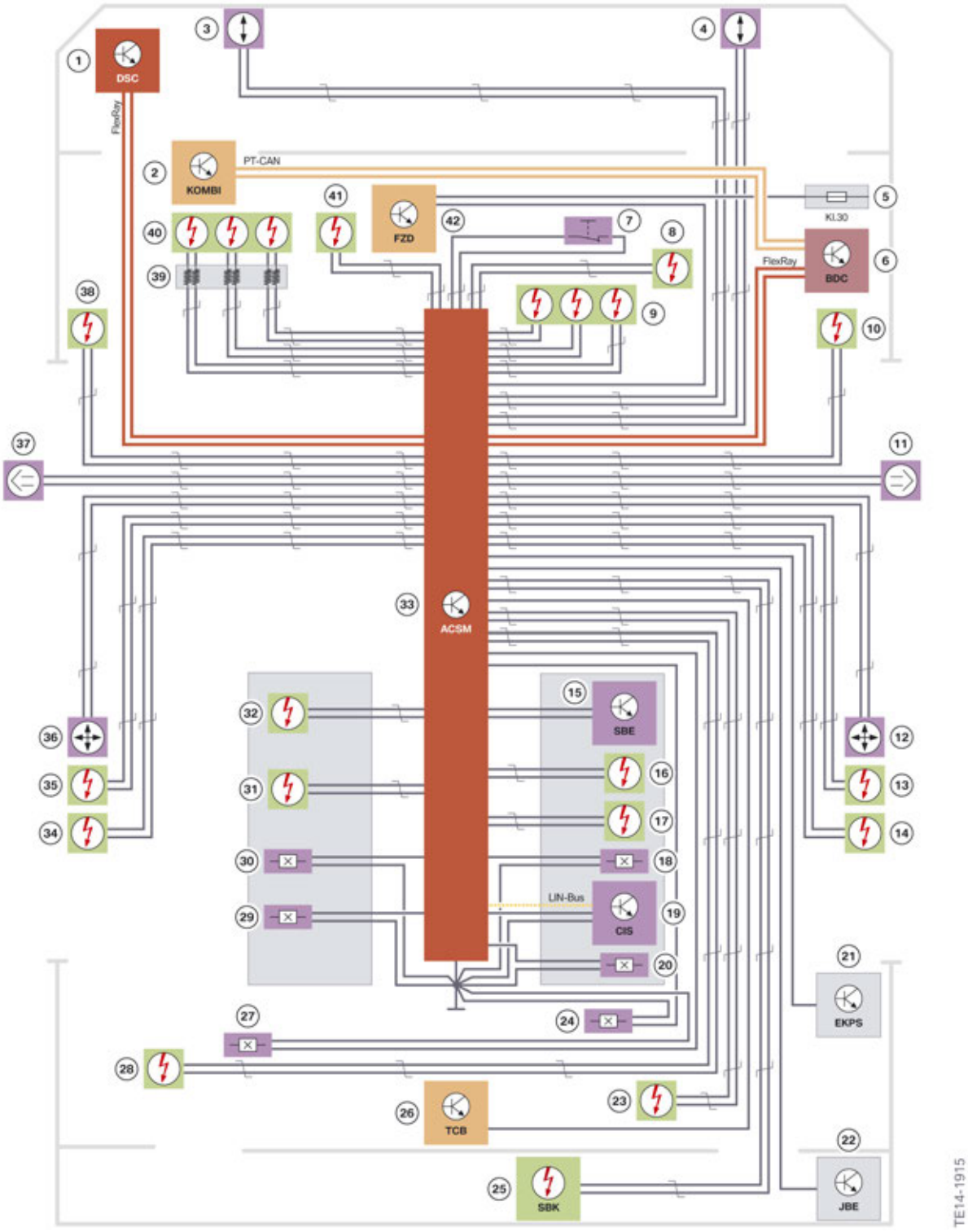

G12 System wiring diagram

G12 Passive Safety Systems

2. System Overview

Index	Explanation
1	Dynamic Stability Control (DSC)
2	Instrument cluster (KOMBI)
3	Airbag front sensor, left
4	Airbag front sensor, right
5	Fuses for power distribution box, front right
6	Body Domain Controller (BDC)
7	Switch for front passenger airbag deactivation (only Korea)
8	Knee airbag, front passenger
9	Front passenger airbag
10	Head airbag, right
11	Airbag sensor, door, right (pressure)
12	Acceleration sensor, B-pillar on right
13	Adaptive belt force limiter, passenger's side
14	Belt tensioner, front passenger
15	Seat occupancy mat (only Korea)
16	Crash-active headrest, front passenger
17	Side airbag, front passenger
18	Seat-position sensor, front right
19	Seat occupancy mat, CIS mat
20	Seat belt buckle switch, front passenger
21	Electronic fuel pump control
22	Junction box electronics (JBE)
23	Belt tensioner, front passenger
24	Seat belt buckle switch, rear right (only vehicles with comfort seats in rear passenger compartment (OE 460) or Executive Lounge (OE 7GZ))
25	Safety battery terminal (SBK)
26	Telematic Communication Box 2 (TCB2)
27	Seat belt buckle switch, rear left (only vehicles with comfort seats in rear passenger compartment (OE 460) or Executive Lounge (OE 7GZ))
28	Belt tensioner, driver
29	Seat belt buckle switch, driver
30	Seat-position sensor, front left
31	Side airbag, driver's side
32	Crash-active headrest, driver
33	Advanced Crash Safety Module (ACSM)
34	Belt tensioner, driver

G12 Passive Safety Systems

2. System Overview

Index	Explanation
35	Adaptive belt force limiter, driver's side
36	Acceleration sensor, B-pillar on left
37	Airbag sensor, door, left (pressure)
38	Head airbag, left
39	Clock spring
40	Driver's airbag
41	Knee airbag, driver
42	Roof function center (FZD)

2.2. System overview

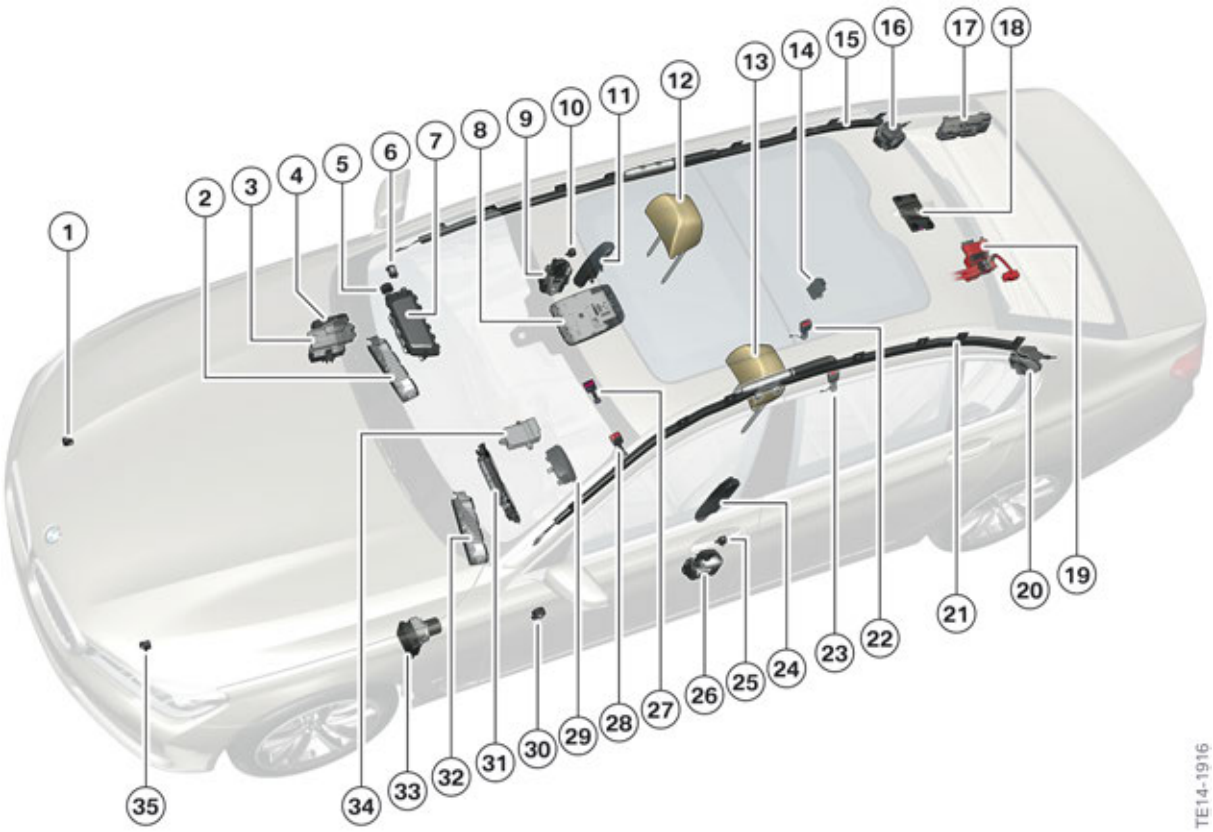

G12 system overview

G12 Passive Safety Systems

2. System Overview

Index	Explanation
1	Airbag front sensor, right
2	Knee airbag, front passenger
3	Power distribution box, front right
4	Body Domain Controller (BDC)
5	Switch for front passenger airbag deactivation (Not for US)
6	Airbag sensor, door, right (pressure)
7	Front passenger airbag
8	Roof function center (FZD)
9	Automatic tensioner, front passenger
10	Acceleration sensor, B-pillar on right
11	Side airbag, front passenger
12	Crash-active headrest, front passenger
13	Crash-active headrest, driver
14	Electronic fuel pump control
15	Head airbag, left
16	Seat belt, rear right
17	Junction box electronics (JBE)
18	Telematic Communication Box 2 (TCB2)
19	Safety battery terminal (SBK)
20	Seat belt, rear left
21	Head airbag, right
22	Seat belt buckle switch, rear right (only vehicles with comfort seats in rear passenger compartment (OE 460) or Executive Lounge Seating (OE 7GZ))
23	Seat belt buckle switch, rear left (only vehicles with comfort seats in rear passenger compartment (OE 460) or Executive Lounge Seating (OE 7GZ))
24	Side airbag, driver's side
25	Acceleration sensor, B-pillar on left
26	Automatic tensioner, driver
27	Seat belt buckle switch, front passenger
28	Seat belt buckle switch, driver
29	Driver's airbag
30	Airbag sensor, door, left (pressure)
31	Instrument cluster (KOMBI)

G12 Passive Safety Systems

2. System Overview

Index	Explanation
32	Knee airbag, driver
33	Dynamic Stability Control (DSC)
34	Advanced Crash Safety Module (ACSM)
35	Airbag front sensor, left

G12 Passive Safety Systems

3. Functions

3.1. Functions of Advanced Crash Safety Module

The function of the Advanced Crash Safety Module is to permanently evaluate all sensor signals in order to identify a crash situation. Based on the sensor signals and their evaluation, the Advanced Crash Safety Module (ACSM) identifies the direction of the crash and the severity of the impact.

The Advanced Crash Safety Module (ACSM) evaluates the sensor information and then initiates the relevant measures for selective activation of the necessary restraint systems.

At the same time the Advanced Crash Safety Module (ACSM) monitors the system itself and indicates when it is ready for operation by switching off the airbag indicator light.

If an error occurs during operation this is stored in a fault memory. The fault memory can be read out for diagnosis purposes.

If a crash situation is detected, a crash message is sent to the other bus users in the data bus network as notification. The relevant control units respond to this signal by executing their own activities according to the severity of the crash.

The activities include:

- Opening the central locking system
- Activating the hazard warning flasher
- Switching on the interior light
- Making an emergency call

An additional function of the Advanced Crash Safety Module is the acoustic seat belt warning that reminds the driver using visual and acoustic signals to fasten his seat belt. With help of a seat belt buckle switch it is determined whether the driver has fastened his seat belt. Furthermore, for vehicles in the US version the position of the driver and the front passenger seat is monitored.

The functions of the Advanced Crash Safety Module generally belong to one of the following areas:

- Crash-relevant functions
- System monitoring functions
- Additional convenience functions

G12 Passive Safety Systems
3. Functions

3.2. Crash-relevant functions

The Advanced Crash Safety Module must fulfil the following crash-relevant functions:

- Evaluating the sensor signals
- Impact detection
- Determining actuators to be activated
- Specifying the trigger time and trigger sequence
- Activation of the ignition circuit output stages
- Sending the crash message to all bus users
- Crash documentation
- Emergency call function

3.2.1. Evaluating the sensor signals

The sensors serve to identify and verify front-end, side-on and rear-end crashes and also as roll-over detection.

The sensors are located in the Advanced Crash Safety Module (ACSM) or are directly connected to the Advanced Crash Safety Module, where their signals are evaluated and processed.

3.2.2. Impact detection

The US version of the vehicles is equipped with the following sensors:

- one lateral and one longitudinal acceleration sensor in the B-pillars (green).
- one airbag sensor to monitor the pressure in each of the front doors (blue).
- one lateral and one longitudinal acceleration sensor in the ACSM (yellow).
- one roll rate sensor in the ACSM (yellow).
- one vertical acceleration sensor in the ACSM (yellow).
- one front sensor on each of the engine supports (red).

The airbag sensors in the doors assist with the identification of a side-on crash.

The airbag front sensors assist with the identification of a head-on crash and its corresponding severity.

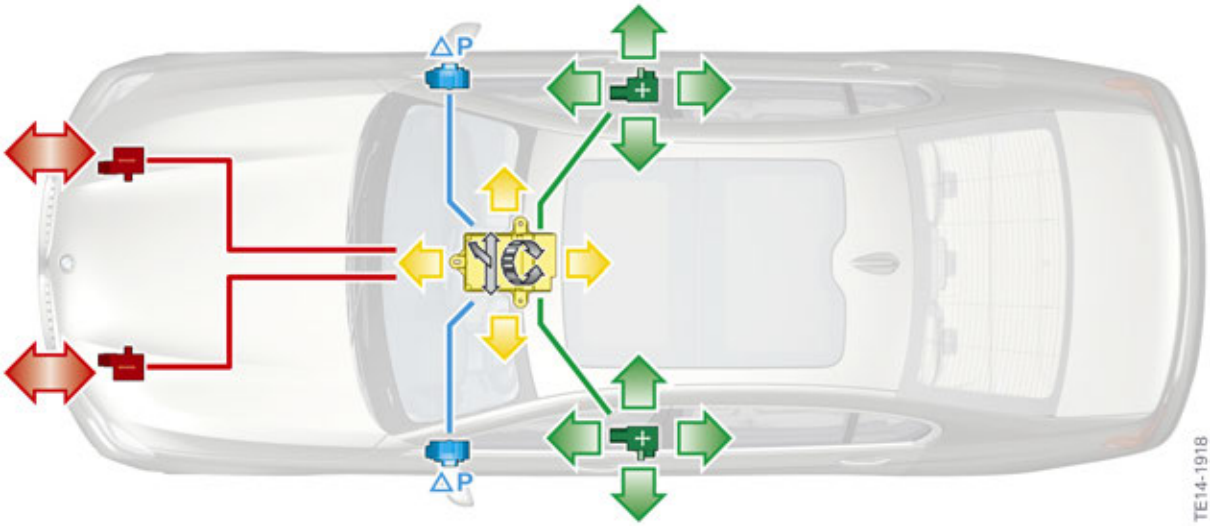

G12 sensors

3.2.3. Trigger time and trigger sequence

The Advanced Crash Safety Module uses the values transmitted by the sensors to determine the direction and severity of the crash.

In the case of a head-on crash, correspondingly high acceleration values must be detected for example by the longitudinal acceleration sensors in the rear side panels and by the longitudinal acceleration sensor in the Advanced Crash Safety Module (ACSM). An algorithm determines the severity and direction of the crash based on the accelerations. This information is used to assist calculation of the activation times and sequence in which the restraint systems are activated.

A possible imminent rollover is also detected and the appropriate protection systems are energized.

3.2.4. Activation of the ignition circuit output stages

The Advanced Crash Safety Module is supplied by the power distribution box on the rear right using terminal 30B. The Advanced Crash Safety Module (ACSM) is in offline mode with terminal 30B. This means that it is active on the data bus and can perform all diagnostic functions.

Activation of the ignition circuits is blocked and is available as of the "Residing" driving condition once the system self-test is complete. The Advanced Crash Safety Module (ACSM) is also ready for ignition in the "Driving" driving condition.

The ignition capacitors are recharged via a switching controller. These ignition capacitors make the firing energy available in the event of a crash. If the voltage supply is interrupted during a crash, the ignition capacitors serve briefly as an energy reserve.

The ignition circuit output stages consist of a high-side and a low-side power switch. The high-side power switch connects the ignition voltage, while the low-side power switch connects to the ground. The ignition circuit output stages are controlled by a microcontroller.

The high-side and low-side power switches also serve to check the ignition circuits during the system self-test.

3.2.5. Sending the crash message

In the event of a collision involving activation of the restraint systems, the Advanced Crash Safety Module (ACSM) sends a crash signal to the bus users in the data bus network.

The Telematic Communication Box 2 (TCB2) is actuated in parallel via a direct single-wire connection. The Telematic Communication Box 2 (TCB2) is the follow-on telematics control unit to the Telematic Communication Box (TCB). The TCB2 acts as a data modem in the vehicle and has one or two data aerials as well as a connection to an emergency aerial. This can be used to establish a telephone connection via the connected vehicle microphone even if the vehicle has rolled over. A built-in SIM card inside the control unit makes these emergency calls possible.

As a result, the respective control units perform the following functions depending on the crash severity:

Function	Control unit
Switch off electric fuel pump	Digital Motor Electronics (DME) via electronic fuel pump control (EKPS)
Release central locking system	Body Domain Controller (BDC)
Switch on hazard warning flashers	Body Domain Controller (BDC)
Switch on interior light	Body Domain Controller (BDC)
Transmit emergency call	Telematic Communication Box 2 (TCB2)

3.2.6. Crash documentation

In the event of a collision where one or more actuators are activated, a crash entry is stored in a non-erasable memory. After five crash entries, a non-erasable fault code entry is stored together with the information that the five crash messages have been saved. The airbag indicator light also lights up continuously.

The five crash entries could also be stored during the course of an accident. Each crash entry is assigned a system time. The control unit remains ignitable even after five crash entries. The crash entries cannot be erased and serve the purpose of subsequent device diagnosis. A maximum of five crash entries can be saved. The control unit must then be replaced.

3.2.7. Emergency call function

The emergency call functions are country-specific and are available to customers in countries with ConnectedDrive Services infrastructure. An emergency call requires an active SIM card in the Telematic Communication Box 2 (TCB2) and an available mobile phone network.

The emergency call button is connected directly to the Telematic Communication Box 2 (TCB2).

The manual emergency call allows the driver to request assistance in the event of a medical emergency.

3.3. System monitoring functions

The Advanced Crash Safety Module has the following system monitoring functions:

- System self-test (pre-drive check).
- Display of system operability.
- Cyclic monitoring.
- Fault display and fault storage.
- Output of faults (diagnosis).
- Acoustic and visual seat belt warning.
- Deactivation of the front passenger airbag and side airbag on the passenger's side in European version vehicles (only vehicles with (OE 5DA)).
- Deactivation of the front passenger airbag and side airbag and knee airbag on the passenger's side and the knee airbag in the US version of the vehicles.

3.3.1. System self test

The Advanced Crash Safety Module (ACSM) performs a system self-test after a terminal change has been made as of the "Residing" driving condition. The airbag indicator light is activated for roughly five seconds during the system self test.

Once the system self-test is complete and no faults have been identified, the airbag indicator light goes out and the system is operational.

3.3.2. Display of system operability

The airbag indicator light in the instrument panel goes out to indicate that the Advanced Crash Safety Module is ready for operation.

3.3.3. Cyclic monitoring

Once the system self-test has been successfully concluded and the system is ready for operation, a cyclic monitoring procedure is performed for fault monitoring purposes. This cyclical monitoring serves the internal diagnosis of the control unit and overall airbag system. Cyclical monitoring takes place continuously as of the "Residing" driving condition. It is also continued after a terminal change has been made as of the "Driving" driving condition.

3.3.4. Fault display and fault storage

The Advanced Crash Safety Module (ACSM) has a non-volatile fault memory. The airbag indicator light illuminates to indicate a fault entry.

Events such as the activation of an airbag or retractor tensioner are also stored in the fault memory.

⚠

If the fault memory contains the entry that the restraint system has been activated, this only means the ignited restraint system is not available for further activation and not that it malfunctioned during the crash.

3.3.5. Output of faults (diagnosis)

The fault memory can be read out via the diagnostic interface with the assistance of the Integrated Service Technical Application (ISTA) in the BMW diagnosis system. After rectifying the faults or after replacing activated components, the fault memory can be cleared with the diagnosis command "Clear fault memory".

3.3.6. Acoustic and visual seat belt warning

An acoustic and visual seat belt warning is a standard feature of all vehicles equipped with the Advanced Crash Safety Module (ACSM). The Advanced Crash Safety Module (ACSM) records whether or not the driver or front passenger have fastened their seat belts. If they have not, an acoustic and visual warning is output to remind them to fasten their seatbelts. Both seat belt buckle switches are monitored separately. Depending on the national-market version and optional equipment, seat belt buckle switches are also installed in the rear passenger compartment and a seat belt warning is issued accordingly for the rear seat passengers.

3.3.7. Deactivating the airbag

CIS mat

Provisions are made in the US versions of the vehicles for the airbag to be deactivated automatically in order to satisfy the regulations of the National Highway Traffic Safety Administration (NHTSA). When the child seats listed in the regulation are occupied by a child this must lead to deactivation of the airbag.

To do so, a seat occupancy mat is used on the front passenger seat for the purpose of occupancy detection and classification of occupants in the front passenger seat. A Capacitive Interior Sensing mat (CIS mat) is used in the G12.

The CIS mat is made up of two elements: A sensor wire, which runs parallel to the seat heating in the seat cushion, and an evaluation unit. The CIS mat measures the capacity and ohmic resistance between the sensor wire (anode) and the vehicle ground (cathode) at a frequency of 120 kHz. The CIS mat determines from the change in capacity and resistance whether the front passenger seat is occupied by an adult or a child in a child seat.

The deactivation of the front passenger airbag, the side airbag and knee airbag on the passenger's side is signalled by the indicator lamp for front passenger airbag deactivation.

The indicator lamp for front passenger airbag deactivation in the roof function center lights up if a child seat with child (for example a child restraint system that has been tested in accordance with the NHTSA regulations and is holding a small child on the front passenger seat) was detected or if the front passenger seat is unoccupied.

3.4. Active protection

The standard equipment of the G12 already contains the Active Protection safety package (OE 5AL).

The Active Protection safety package (OE 5AL) comprises the following three functionally independent subsystems:

- PreCrash
- PostCrash
- Alertness assistant

The Active Protection safety package (OE 5AL) increases the safety of the occupants through preventative measures in the event of critical driving situations (PreCrash) and through measures after a crash (PostCrash). The attention assist monitors the driving style of the driver during a trip and encourages the driver to take breaks if necessary.

G12 Passive Safety Systems

3. Functions

3.4.1. System wiring diagram for Active Protection

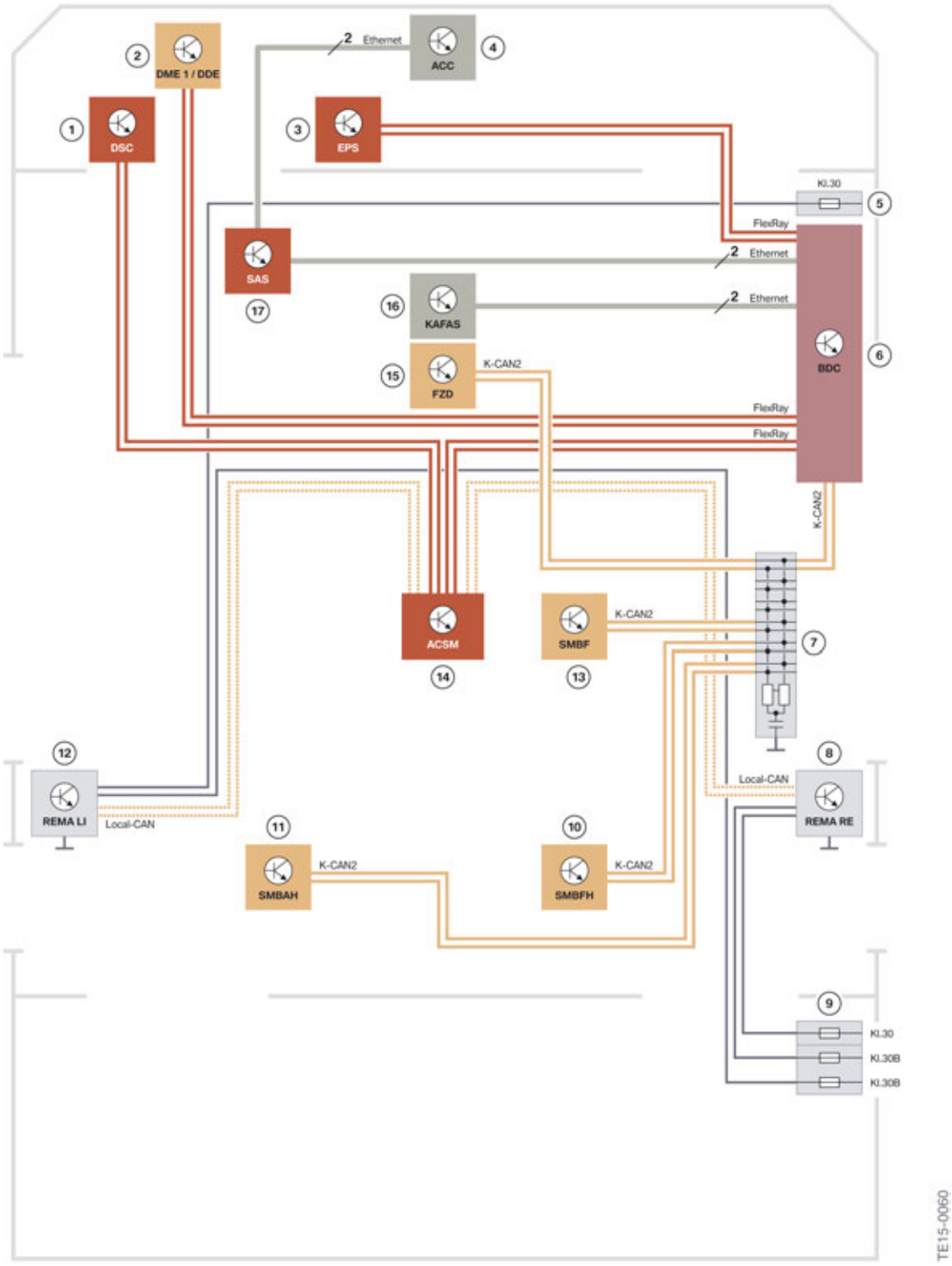

G12 system wiring diagram for Active Protection

Index	Explanation
1	Dynamic Stability Control (DSC)
2	Digital Motor Electronics (DME)
3	Electronic Power Steering (EPS)
4	Radar sensor for active cruise control (ACC)
5	Fuse in power distribution box, front right
6	Body Domain Controller (BDC)
7	CAN terminator
8	Reversible motor-driven reel, right (REMABF)
9	Fuse in power distribution box, rear right
10	Front passenger seat module, rear (SMBFH)
11	Driver's seat module, rear (SMFAH)
12	Reversible motor-driven reel, left (REMAFA)
13	Front passenger seat module, (SMBF)
14	Advanced Crash Safety Module (ACSM)
15	Roof function center (FZD)
16	Camera-based driver support systems (KAFAS)
17	Control unit for optional equipment system SAS

3.4.2. PreCrash

The PreCrash subsystem introduces preventative protective measures for the occupants in known critical driving situations which may lead to an accident.

Identification of critical driving situations

Critical driving situations are identified with help of the inertial sensor system installed in the vehicle. Critical driving situations include:

- Emergency braking initiated
- Strong understeer
- Strong oversteer
- Rollover of the vehicle

For vehicles with the optional Driving Assistance Plus (Package ZDB) which includes Active Driving Assistant (OE 5AS) and Active Driving Assistant Plus (OE 5AT) imminent collisions that have been detected with help of the radar sensor system and KAFAS stereo camera. For the PreCrash identification, separate thresholds to the collision warning thresholds are made available by the KAFAS or radar sensor system for activating the PreCrash functions.

G12 Passive Safety Systems

3. Functions

Basic PreCrash functions

The standard equipment of the G12 already contains the Active Protection safety package (OE 5AL) and offers the following basic ranges of functions:

Convenience function

- When the seat belt is fastened, the front seat belts are automatically pre-tensioned once when driving starts.

Safety functions

In detected situations that are critical for driving dynamics (for example own emergency braking, strong understeer, skidding) the following individual functions are activated according to need:

- Automatic pre-tensioning of front seat belts
- Automatic closing of windows up to a gap

Enhanced PreCrash functions

Different ranges of functions are implemented with the PreCrash subsystem depending on the equipment.

The "Enhanced PreCrash functions" include additional ranges of functions on top of the basic functions.

The table below provides an overview of the individual ranges of functions for the PreCrash subsystem and how these are linked to the optional equipment:

	Scope of function	**Optional equipment***
"Extension" of PreCrash functions (only with additional optional equipment)	Automatic closing of the glass sunroof Positioning the front passenger backrest Positioning the rear seat backrests	Option 402 Option 456 Option 460
"Extension" of detected PreCrash situations (only with additional optional equipment)	Additional need-based activation of PreCrash functions in the case of: Detected, unavoidable collisions with vehicles travelling in front or stationary vehicles (requires OE with collision alert) Automatic emergency braking of the vehicle in the event of imminent collisions above a specific deceleration threshold Detected, unavoidable rear-end collisions caused by colliding vehicles	OE 5AS or OE 5AT

*Explanation of optional equipment codes:

- OE 402 Panoramic electric glass moonroof
- OE 456 Multi-contour seats
- OE 460 Rear comfort seats
- OE 5AS Active Driving Assistant
- OE 5AT Active Driving Assistant Plus

3.4.3. PostCrash

The PostCrash subfunction includes the automatic braking function after an accident, which brakes the vehicle to a standstill in certain accident situations without intervention from the driver. The risk of another collision can thus be reduced. The driver may oversteer the automatic braking after a crash by pressing the brake pedal or accelerator pedal.

The automatic braking after a crash is activated if a crash with sufficient severity has been identified in the Advanced Crash Safety Module (ACSM). The Advanced Crash Safety Module (ACSM) then sends a signal to the electronic fuel pump control unit (EKPS) to switch off the fuel pump. This same signal is evaluated by the DSC control unit. The DSC control unit then brakes the vehicle with help of the DSC pump and brings it to a standstill.

The DSC generates a setpoint deceleration of 5 m/s^2 for braking. The setpoint deceleration is only achieved if road conditions permit this. During automatic braking the accelerator pedal and brake pedal are monitored. The automatic braking is interrupted if the accelerator pedal is pressed or if the brake pedal is pressed for a longer period by the driver. Pressing the accelerator pedal only causes the braking process to stop. Acceleration of the vehicle is not possible as the fuel pump is switched off.

Also during automatic braking the ABS prevents the wheels from blocking and the DSC stabilizes the vehicle. If the DSC is in DSC OFF mode during automatic braking, a forced activation of the DSC is effected.

Approx. 1.5 seconds after reaching standstill, the brake is automatically released and the vehicle must be secured against rolling away.

If a crash is detected, which leads to activation of the safety battery terminal, then automatic braking cannot be activated as the DSC pump is no longer supplied with power.

Automatic braking is not activated under the following conditions:

- The DSC has failed before the crash.
- The ABS has failed before the crash.
- The brake fluid level is too low.

If these faults occur during or after the crash, the control is led to the end as these faults are then interpreted as consequences of the crash.

G12 Passive Safety Systems

4. System Components

4.1. Advanced Crash Safety Module

In the G12 the Advanced Crash Safety Module (ACSM) is located centrally in the vehicle under the center console between the two front seats. The central sensor system is integrated in the Advanced Crash Safety Module (ACSM).

G12 Advanced Crash Safety Module (ACSM)

4.2. Sensors and switches

4.2.1. Lateral and longitudinal acceleration sensor

The lateral and longitudinal acceleration sensors assist with the identification of head-on crashes, side-on crashes and rear-end crashes.

The airbag sensor consists of a longitudinal acceleration sensor and a lateral acceleration sensor. The acceleration sensors measure the positive and negative acceleration in the X and Y direction. The resulting value from the X and Y signal is decisive in identifying the direction of the crash. The airbag sensors assist with the identification of head-on, side-on and rear-end crashes. The airbag sensors on the left and right are of identical design and are allocated by way of mechanical encoding during installation.

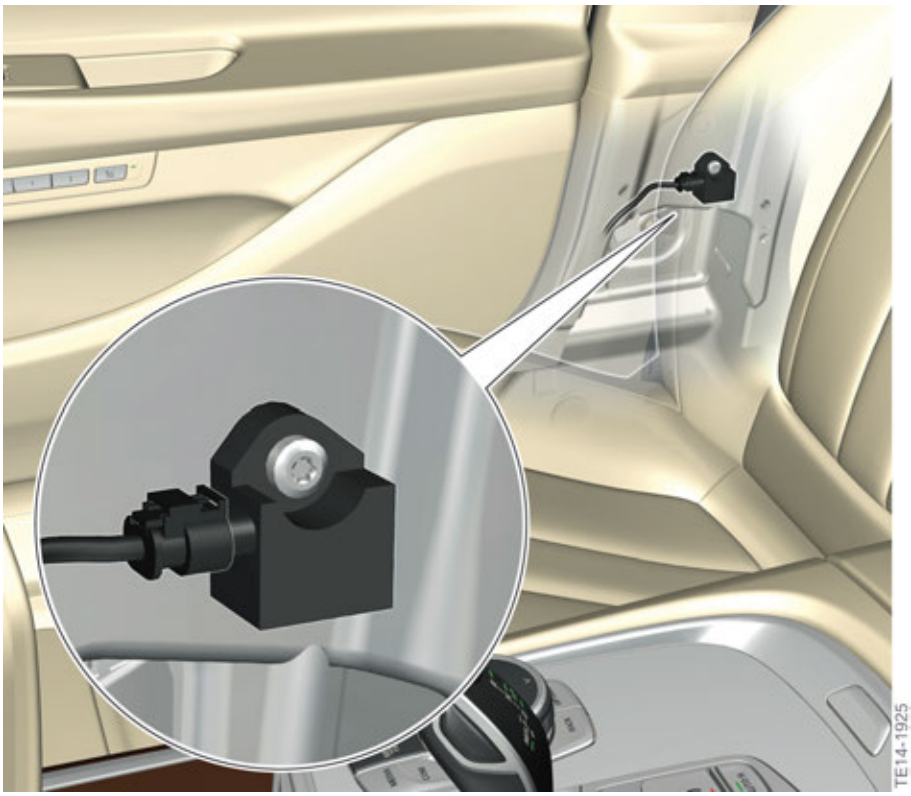

G12 lateral and longitudinal acceleration sensor

4.2.2. Door pressure sensor

In the G12 pressure sensors are installed in the driver's door and front passenger door. The pressure sensors in the doors are now no longer attached with a bolt as was previously the case, but instead are screwed into the bracket (inner door panel) and the electrical connections and plug connections can only be connected once the relevant sensors have been installed.

Side crashes are identified with the assistance of the airbag sensors. In addition to the lateral acceleration values that are present, the pressure in the door cavity also increases in the event of a side-on crash.

The airbag sensors in the doors are used to verify the plausibility of the acceleration signals from the B-pillar airbag sensors and the Advanced Crash Safety Module (ACSM) when a side-on crash is detected. The airbag sensors are situated in the inner panel of the doors and measure the pressure increase in the event of a side-on collision. In the event of a side-on collision at the door the outer skin is pushed inwards. The door interior is reduced in size and the inner pressure increases. This pressure change is measured by the airbag sensors. The airbag sensor also includes electronics, in addition to the pressure sensor, that digitise the pressure readings and transmit them cyclically to the Advanced Crash Safety Module (ACSM). The data transfer is effected analogue to the airbag sensors in the B-pillars. The pressure readings are evaluated in the Advanced Crash Safety Module (ACSM).

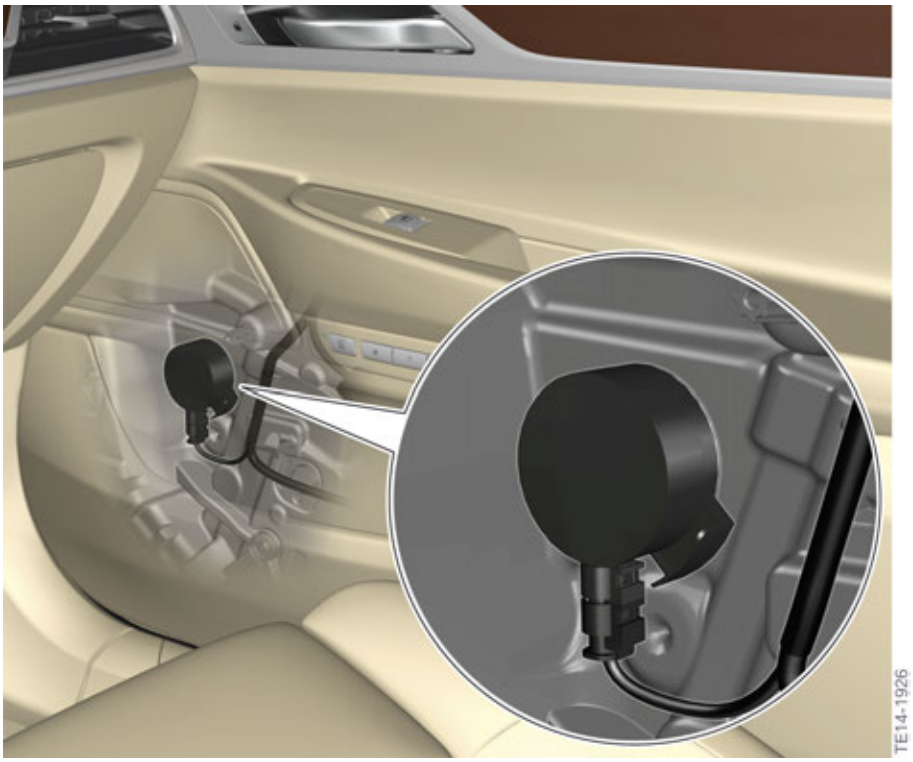

G12 door airbag sensor (pressure)

4.2.3. Airbag front sensor

Two front sensors are installed in the front area. The measured values are forwarded to the Advanced Crash Safety Module (ACSM) where they are evaluated.

The airbag front sensors on the left and right assist with the identification of a head-on crash.

The sensors deliver additional information to the Advanced Crash Safety Module (ACSM) on the characteristics and severity of the collision. Each sensor contains an acceleration sensor for recording the deceleration, signal processing technology and electronics for data transfer. The measured values are sent in the form of a message to the Advanced Crash Safety Module (ACSM) and are used in the calculation of the algorithm.

G12 airbag front sensor

4.2.4. Sensors in the ACSM

In the G12, the central sensor system is integrated in the Advanced Crash Safety Module (ACSM). The Advanced Crash Safety Module (ACSM) contains a longitudinal and lateral acceleration sensor, a vertical acceleration sensor and a roll rate sensor for impact detection. The Advanced Crash Safety Module (ACSM) also includes a longitudinal and lateral acceleration sensor and a yaw sensor for the driving dynamics control.

The sensor data for impact detection is evaluated in the Advanced Crash Safety Module (ACSM) and helps to identify side-on, rear-end or head-on crashes and assists with roll-over detection. The sensor data not yet evaluated for the driving dynamics control is sent to the DSC control unit via FlexRay where it is processed.

G12 Advanced Crash Safety Module (ACSM)

4.2.5. CIS mat

The capacitive interior sensing mat (CIS mat) is fitted in the front passenger seat. The CIS mat detects whether the front passenger seat is occupied by an adult or a by child in a child seat. The deactivation of the front passenger airbag, the side airbag and the knee airbag on the passenger's side is signalled by the indicator light for front passenger airbag deactivation.

The CIS mat and control unit are now two separate components. The CIS mat control unit is located under the passenger and driver seat. The separate control unit stores all faults and data related to the CIS mat.

4.2.6. Seat belt buckle switch

The seat belt buckle switches are located in the seat belt buckles of the driver and front passenger seat.

The seat belt buckle switch detects whether the seat belt buckle tongue is in the seat belt buckle. The Advanced Crash Safety Module (ACSM) supplies power to the sensors and performs the evaluation. As of driving readiness, the seat belt buckle switch is permanently monitored and used for the visual and acoustic seat belt warning and also to determine which restraint systems are to be triggered.

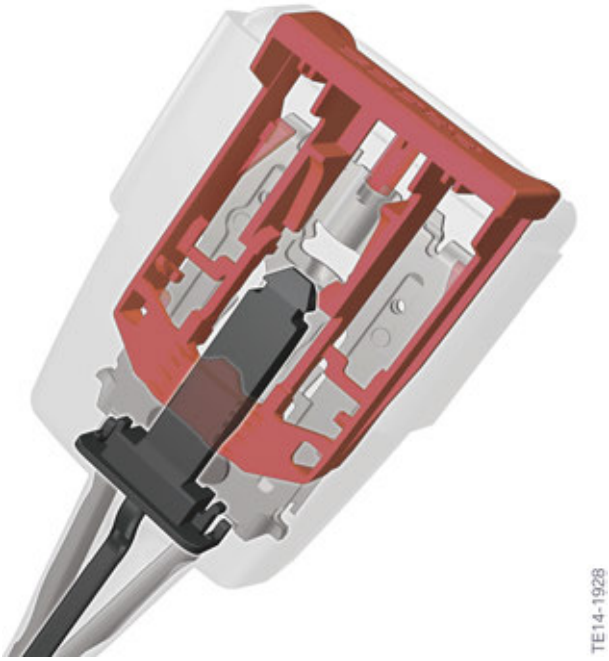

G12 seat belt buckle switch

4.2.7. Emergency call button

The emergency call button is located in the roof function center.

G12 roof function center (FZD) with emergency call button

Index	Explanation
1	Emergency call button

4.2.8. Seat-position sensors

In accordance with the US legal requirement (FMVSS208), a height identification for the person in the driver and front passenger seat must be effected. This height identification is effected via the adjustment travel of the forward/back seat adjustment. In US-version vehicles, the exact position is identified using the seat-position sensors for the driver and front passenger seats.

The job of the seat-position detector is to distinguish between a relatively small person and a person of normal height within the lengthways adjustment range of the seat. This detection is another technical feature aimed at increasing the safety of the occupants. The deployment of the two airbag stages is then adjusted to the driver's/front passenger's seat position.

The seat-position detector takes the form of a 2-wire hall effect sensor and is supplied with power via the Advanced Crash Safety Module (ACSM). The current level of the seat-position sensor changes depending on the seat position.

4.3. Actuators

4.3.1. Overview

The following actuators are installed in the G12:

- Two-stage driver's airbag
- Two-stage front passenger airbag
- Knee airbag on front left and right
- Head airbag on left and right
- Side airbag on front left and right
- Belt tensioner with adaptive force limiter
- Safety battery terminal

In addition, the following indicator lights inform the vehicle occupants about the condition of the safety systems:

- Airbag indicator light.
- Seat belt warning light.
- Indicator lamp for front passenger airbag deactivation.

The familiar three-point seat belts are used as the seat belt systems for all seats in the G12.

G12 Passive Safety Systems

4. System Components

G12 seat belt

Index	Explanation
1	Seat belt buckle
2	Belt tensioner

4.3.2. Driver's airbag

The purpose of the driver's airbag is to reduce the risk of injury to the driver in combination with the seat belt when a front-end crash occurs. The driver's airbag is located in the steering wheel impact plate. The driver's airbag is equipped with a gas generator.

A two-stage gas generator is installed which can be used to activate the stages at short or long time differences, depending on the severity of the crash detected and taking into consideration the seat position.

In addition, the driver's airbag features an active vent valve.

G12 driver's airbag

Index	Explanation
1	Ignition squib, level 1
2	Ignition squib, level 2

4.3.3. Front passenger airbag

The purpose of the front passenger airbag is to reduce the risk of accident to the front passenger in the event of a front-end crash. The front passenger airbag is located in the dashboard. When the front passenger airbag expands, the dashboard tears open at defined points.

A two-stage gas generator is installed which can be used to activate the stages at short or long time differences, depending on the severity of the crash detected and taking into consideration the seat position.

The front passenger airbag features an active vent valve.

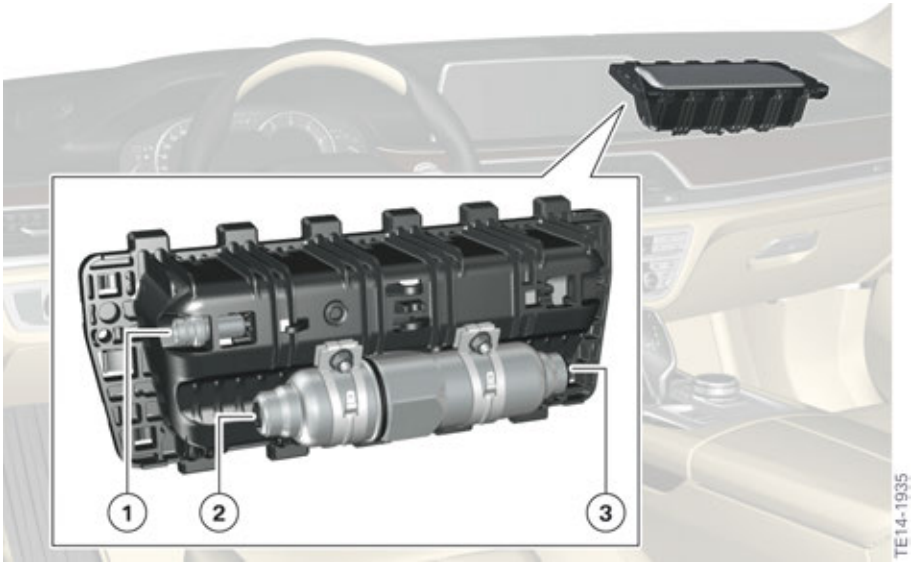

G12 front passenger airbag

Index	Explanation
1	Ignition squib for active vent valve
2	Ignition squib, level 1
3	Ignition squib, level 2

4.3.4. Knee airbag

The US standards (laws) contain requirements on the passive restraint of occupants (without seatbelt). This is why in the US version of the vehicles a knee airbag is also required on the driver's side and passenger's side to control the forwards displacement of the occupant(s) in the event of a head-on crash.

G12 knee airbags in US version of vehicles

4.3.5. Head airbag

Head airbags are installed in the G12 to protect the occupants' heads in the event of a side collision.

The head airbag extends from the A-pillar to the C-pillar and covers the entire area of the side windows. It expands between the occupants and side structure.

System features:

- Extended covered area across all front and rear side windows.
- Protection of occupants from glass splinters.
- Covered area for different-sized occupants optimized.

G12 head airbag

4.3.6. Side airbag

As with all current BMW models, the side airbag at the front ignites out of the front seat backrest.

The side airbags and gas generators are accommodated in a plastic housing, the airbag module. This is installed in the front seat backrest and is concealed by the seat cover.

If activated, the side airbag emerges outwards from the backrest frame and spreads between the side structure and occupant.

It is important to ensure that no additional seat covers are fitted as they would greatly impair the function of the side airbag, or even immobilize it altogether.

G12 side airbag

Index	Explanation
1	Side airbag

4.3.7. Automatic tensioner with adaptive force limiter

An automatic reel with adaptive force limiter for the driver and front passenger is installed in the G12. With the aid of a gas generator, there is a changeover from a high to a low power level during the impact, in order to reduce the seat belt restraining forces.

When optimally harmonized with the airbag, it ensures the kinetic energy acting on the occupants is more evenly dissipated for the duration of the crash. Thus lower occupant stress values are achieved.

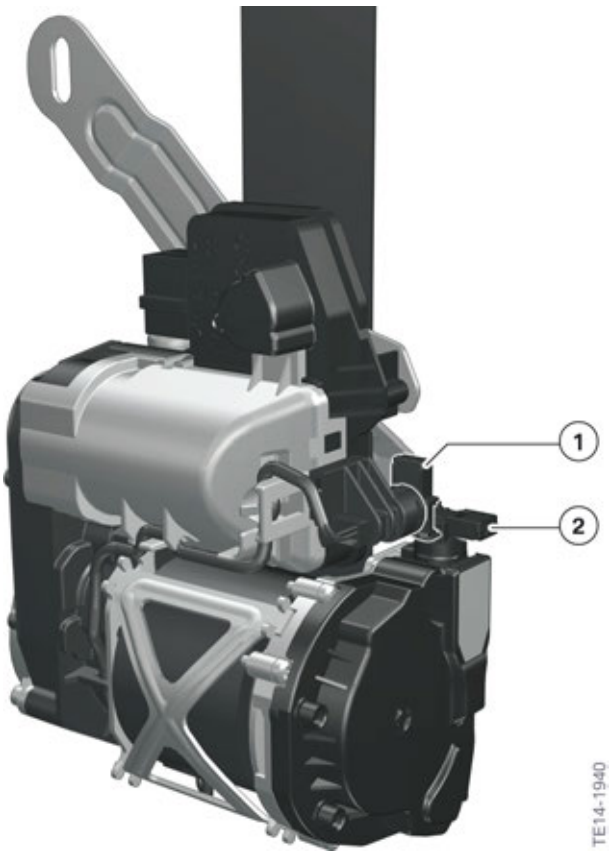

G12 retractor tensioner with adaptive force limiter

Index	Explanation
1	Connection of ignition squib, belt tensioner
2	Connection of ignition squib, adaptive force limiter

4.3.8. Active head restraints, front

The active head restraint is used in the new BMW 7 Series in conjunction with the multifunction seat. This is a head restraint with a pyrotechnic actuator that optimizes the distance and height of the headrest in relation to the head if a rear-end collision of sufficient force occurs. This reduces the load on the cervical vertebrae in the event of a rear-end collision. The head restraint is activated early, even prior to backwards displacement of the occupant's head.

The active head restraint reduces the load in the cervical vertebrae in the event of a rear-end collision. For the vehicle occupants therefore, correct adjustment of the head restraint and the distance of the head from the head restraint is of crucial importance.

In the event of a rear-end collision, the active head restraint reduces the distance between the head and the head restraint before the occupants are displaced backwards. This reduces the danger of injury to the cervical vertebrae, even if a minor accident occurs.

⚠

Seat or head restraint covers and/or accessories that could impair the protective effect must not be mounted on the head restraints.

4.3.9. Safety battery terminal

The safety battery terminal (SBK) is triggered at different thresholds when the Advanced Crash Safety Module (ACSM) detects a head-on, side-on or rear-end crash of sufficient severity.

Even though the safety battery terminal (SBK) has been disconnected, a voltage supply to all safety-relevant consumers such as hazard warning lights, interior light, airbag and telephone (including emergency call) is ensured.

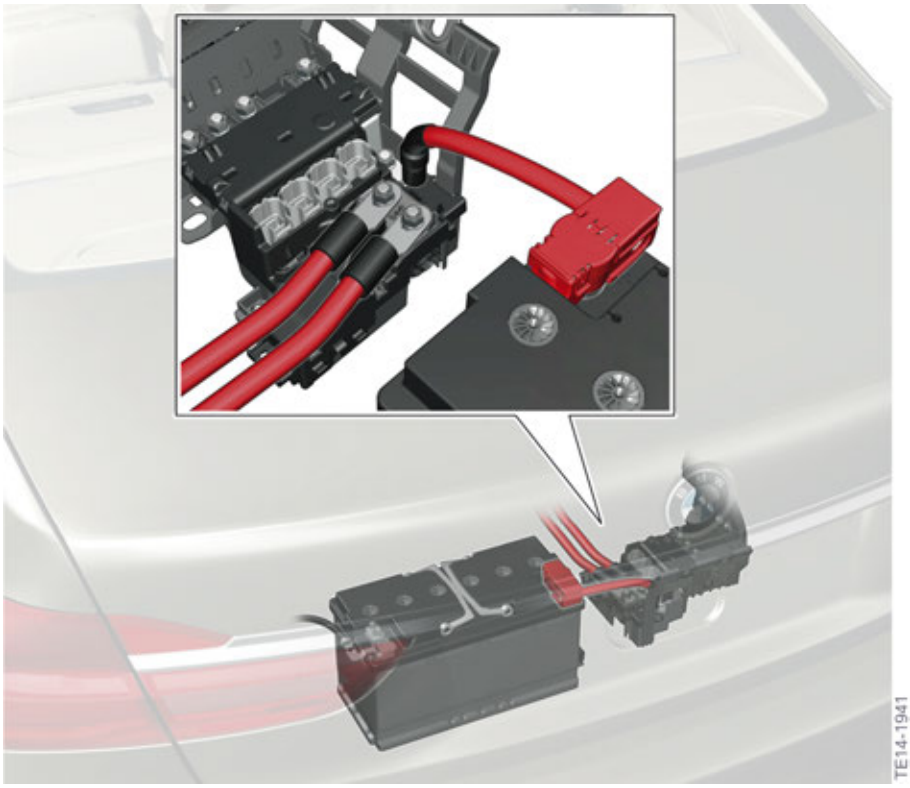

G12 safety battery terminal (SBK)

4.3.10. Airbag indicator light

The airbag indicator light is located on the instrument panel. The airbag indicator light illuminates and then goes out during the pre-drive check to signal readiness of the Advanced Crash Safety Module (ACSM) and passive safety systems. The airbag indicator light is controlled via a message on the FlexRay from the Advanced Crash Safety Module (ACSM) via the Body Domain Controller (BDC) to the instrument cluster. The instrument cluster receives a message cyclically. If the message remains off, the airbag indicator light is activated.

G12 airbag indicator light

4.3.11. Seat belt warning light

A visual and audible warning is issued if the seat belt is not fastened or is unbuckled during a trip.

G12 seat belt warning light

4.3.12. Indicator lamp for front passenger airbag deactivation

The indicator lamp for front passenger airbag deactivation is in the roof function center in the G12. The indicator lamp for front passenger airbag deactivation is automatically activated if the CIS mat detects a small child in a child seat or if the front passenger seat is unoccupied.

G12 indicator lamp for front passenger airbag deactivation

Index	Explanation
1	Indicator lamp for front passenger airbag deactivation

Bayerische Motorenwerke Aktiengesellschaft
Händlerqualifizierung und Training
Röntgenstraße 7
85716 Unterschleißheim, Germany